YAMAHA

PARTS CATALOGUE

YFM35FAV (5UHD) EUROPE
YFM35FAV (5UHE) OCEANIA

1E5UH-300E1

(2E5UH-300E1)

YAMAHA GENUINE Parts & Accessories

2006/3/10

NEWS NO.	DATE	COMMENT
PE0-MC-050203	Nov.,21,2005	FIG.21:SIDE COVER ILLUSTRATION CORRECTION
PE0-MC-060007	Feb.,10,2006	FIG.40:HEADLIGHT LIST/ILLUSTRATION REVISION

POWER PARTS By 4x4UAV

POWER PARTS By 4x4UAD

YFM35FAV
PARTS CATALOGUE
©2005 by Yamaha Motor Co., Ltd.
1st edition, May 2005
All rights reserved.
Any reprinting or unauthorized use
without the written permission of
Yamaha Motor Co., Ltd.
is expressly prohibited.
Printed in Japan.

A3

FOREWORD

This Parts Catalogue is related to the parts for the model(s) on the cover page. When you are ordering replacement parts, please refer to this Parts Catalogue and quote both part numbers and part names correctly.

1. Modifications or additions which have been made after the issue of the Parts Catalogue will be announced in the Parts News.
   It is advisable that you make the necessary corrections to the Parts Catalogue according to the Parts News.

2. Abbreviations
   The following abbreviations are used in this Parts Catalogue.

   "UR" Use specified parts number.
   "UN" Use as many as needed.
   "AP" Alternate Parts
   "LM" Locally Made (Parts need to be ordered locally)
   "F#" Frame No. (Applicable machine No.)
   "O/S" Over Size

3. The number of components for assembly
   - Parts, which are to be supplied in an assembly, are listed with a dot (.) in front of the part name as shown below.
   - The numeral appearing to the right of each component part indicates the quantity of parts for each assembly unit.

PART NO.	DESCRIPTION	Q'TY	REMARKS
2F5–83310–60	FRONT FLASHER LIGHT ASSY	2	
115–83311–60	.BULB (6V–18W)	1	

4. Applicable colours of graphics are represented in the "REMARKS" as shown below.

PART NO.	DESCRIPTION	Q'TY	REMARKS
2N4–24110–00–X5	FUEL TANK COMP.	2	MXR
3J1–24240–10	.GRAPHIC, FUEL TANK	1	FOR MXR

5. Note that the illustrations for reference in finding parts numbers are not to be used for assembling. When assembling, please use the applicable service manual.

6. The asterisk (*) before a reference number indicates modified items after the first edition.

POWER PARTS By 4x4UAE

7. Applicable Serial No.

Engine Serial No.

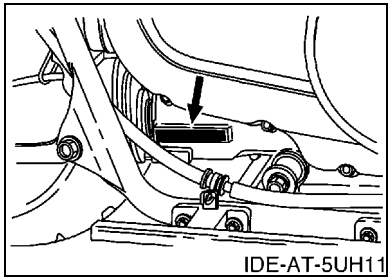

Frame Serial No.

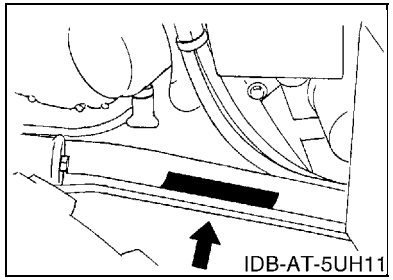

8. Applicable Colour Code (The (*) mark shows Model colour.)

Abbreviation	Colour Name	Colour Code
DPBSE(*)	DEEP PURPLISH BLUE SOLID E	0583
PDG(*)	PASTEL DEEP GREEN	00K0
RTR(*)	ROMANTIQUE ROUGE	00TR

9. Quantity Column Information

Column No.	Name Of Q'ty Column	Destination
1	EUR	EUROPE
2	OCE	OCEANIA

POWER PARTS By 4x4UAD

MODEL LABEL

(1) A label called “Model Label” is affixed in the location as indicated in (3) below. When using this parts catalogue, please be sure to cross–reference the “model code – production code No.” in the catalogue with the “model code – production code No.” indicated on the Model Label affixed onto the product concerned.

(2) “Model Label” Indication

a b ○ xxxx – xxx ● x c	a: Model Type Code b: Production Code No. c: Colouring Type

○ 4TW1–010 ● A

(3) Model Label Affixing Location

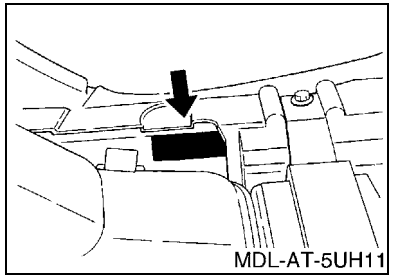

(4) Colouring Information

Model Code	Colouring Type Code	Colour Code	Colour Name	Abbreviation
5UHD	A	00TR	ROMANTIQUE ROUGE	RTR
	B	00K0	PASTEL DEEP GREEN	PDG
	D	0583	DEEP PURPLISH BLUE SOLID E	DPBSE
5UHE	D	0583	DEEP PURPLISH BLUE SOLID E	DPBSE

(5) Model Code – Production Code Number of Model Listed in This Parts Catalogue

Model Code	Production Code No.	Country (destination)
5UHD	010	FRANCE
	020	UNITED KINGDOM
5UHE	010	AUSTRALIA
		NEW ZEALAND

CONTENTS

ENGINE

CYLINDER HEAD B2
CYLINDER B4
CRANKSHAFT & PISTON B5
VALVE B7
CAMSHAFT & CHAIN B8
OIL PUMP B9
INTAKE B10
CARBURETOR B11
EXHAUST B13
CRANKCASE B14
CRANKCASE COVER 1 ..... B15
STARTER C3
STARTER CLUTCH C4
CLUTCH C5
TRANSMISSION C7
MIDDLE DRIVE GEAR C8
SHIFT SHAFT C10

CHASSIS

FRAME C12
FRONT FENDER C14
REAR FENDER C15
SIDE COVER D2
REAR ARM D3
DRIVE SHAFT D4
FRONT DIFFERENTIAL D7
REAR SUSPENSION D9
FRONT SUSPENSION & WHEEL D10
STEERING D11
FUEL TANK D12
SEAT D13
FRONT WHEEL D14
FRONT BRAKE CALIPER E3
REAR WHEEL E4
STEERING HANDLE & CABLE E6
FRONT MASTER CYLINDER E8
STAND & FOOTREST E9
GUARD E11
GENERATOR E12
STARTING MOTOR E13
METER E14
HEADLIGHT F2
TAILLIGHT F3
HANDLE SWITCH & LEVER F4
ELECTRICAL 1 ..... F5
ELECTRICAL 2 ..... F8
EMBLEM & LABEL 1 ..... F9
EMBLEM & LABEL 2 ..... F10

INDEX

NUMERICAL INDEX M1

POWER PARTS By Axalmo

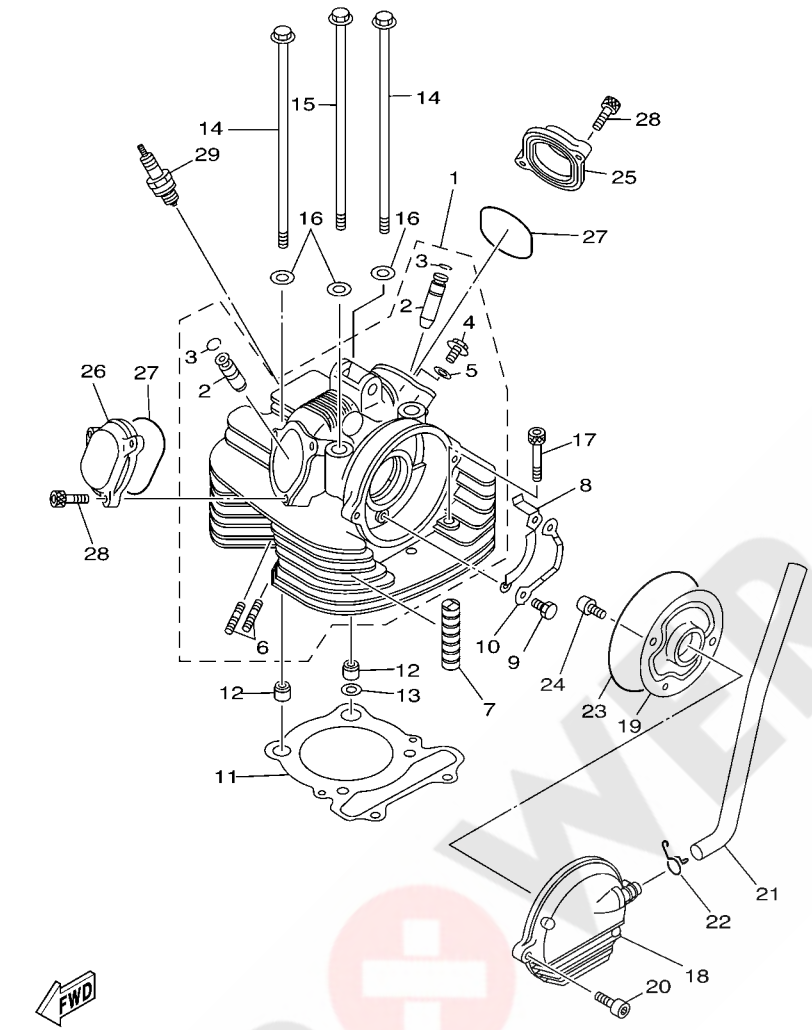

FIG. 1 CYLINDER HEAD

REF. NO.	PART NO.	DESCRIPTION	EUR	OCE				REMARKS
1	5UH–11101–00	CYLINDER HEAD ASSY	1	1				
2	3Y1–11133–11	.GUIDE, VALVE 1	2	2				
3	93440–12052	.CIRCLIP	2	2				
4	95027–06014	.BOLT, FLANGE	1	1				
5	90430–06192	.GASKET	1	1				
6	90116–06503	.BOLT, STUD	2	2				
7	3Y1–11127–00	ABSORBER 3	2	2				
8	3Y1–1111F–00	PLATE	1	1				
9	97017–06012	BOLT	2	2				
10	90215–06162	WASHER, LOCK	1	1				
11	1UY–11181–01	GASKET, CYLINDER HEAD 1	1	1				
12	99530–14016	PIN, DOWEL	2	2				
13	90430–14240	GASKET	1	1				
14	90105–10421	BOLT, FLANGE	2	2				
15	90105–10422	BOLT, FLANGE	2	2				
16	90201–10128	WASHER, PLATE	4	4				
17	91317–08050	BOLT,HEX.SOCKET HEAD	2	2				
18	4WU–11160–01	BREATHER ASSY	1	1				
19	4KB–11165–00	PLATE, BREATHER	1	1				
20	95027–06012	BOLT, FLANGE	2	2				
21	5UH–E1166–00	PIPE, BREATHER 1	1	1				
22	90467–14015	CLIP	1	1				
23	93211–06635	O-RING	1	1				
24	91317–06025	BOLT	2	2				
25	2NL–11186–10	COVER, CYLINDER HEAD SIDE 2	1	1				
26	2NL–11187–10	COVER, CYLINDER HEAD SIDE 3	1	1				
27	93210–57634	O-RING	2	2				

POWER PARTS
By 4WQUAD

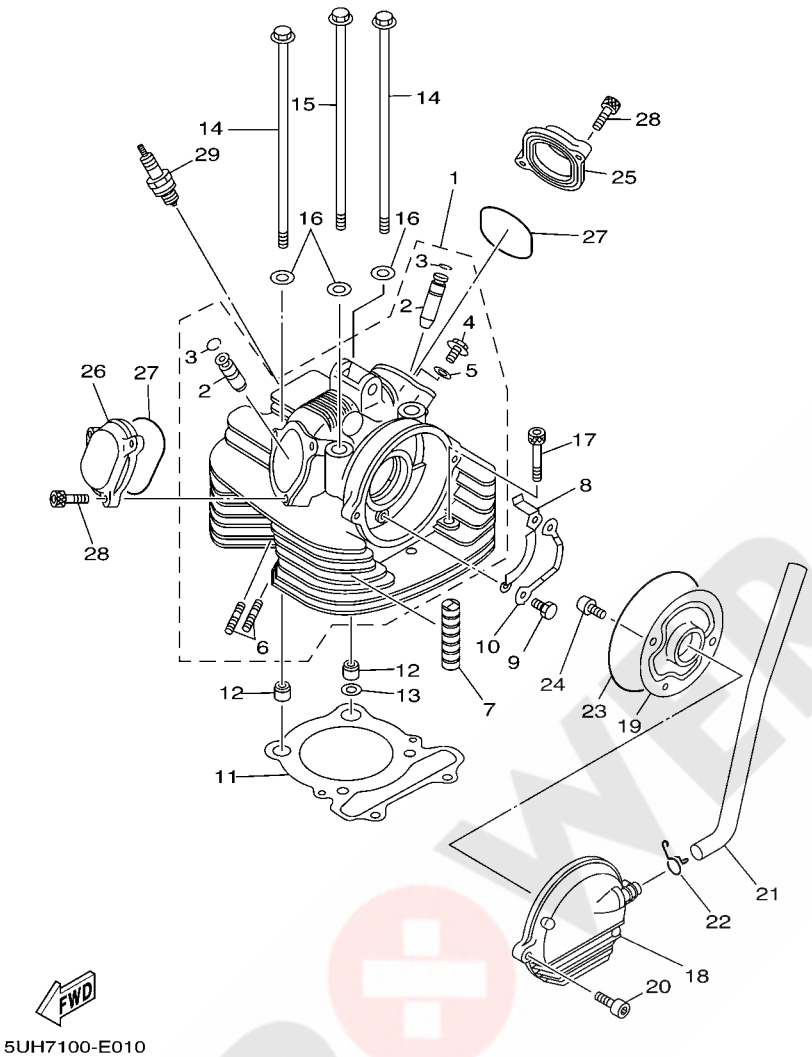

FIG. 1 CYLINDER HEAD

REF. NO.	PART NO.	DESCRIPTION	EUR	OCE				REMARKS
28	91317–06020	BOLT	5	5				
29	94701–00333	PLUG, SPARK (NGK DR8EA)	1	1				

POWER PARTS By 4xQUAD

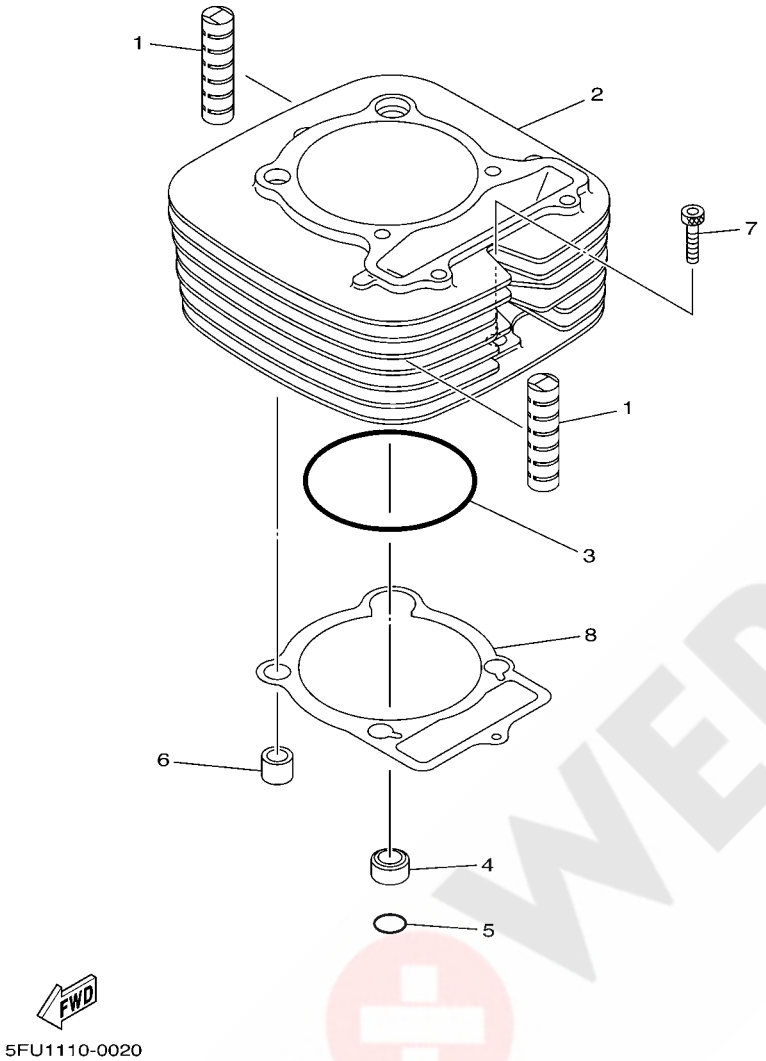

FIG. 2 CYLINDER

REF. NO.	PART NO.	DESCRIPTION	EUR	OCE				REMARKS
1	4X7–11127–00	ABSORBER 3	2	2				
2	5YT–11310–00	CYLINDER	1	1				
3	93210–86509	O-RING	1	1				
4	90387–16547	COLLAR	1	1				
5	93210–18322	O-RING	1	1				
6	99530–14016	PIN, DOWEL	1	1				
7	91317–06030	BOLT	1	1				
8	4KB–11351–00	GASKET, CYLINDER	1	1				

POWER PARTS By 4xQUAD

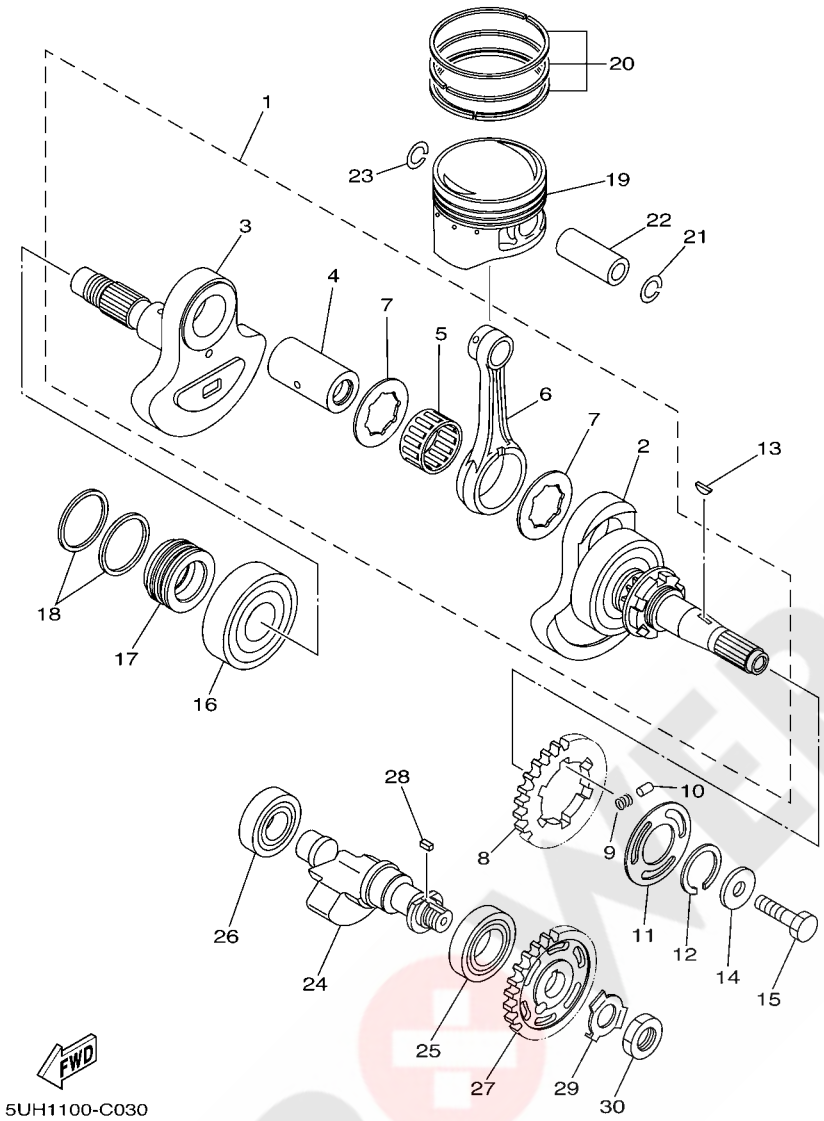

FIG. 3 CRANKSHAFT & PISTON

REF. NO.	PART NO.	DESCRIPTION	EUR	OCE				REMARKS
1	5UH–11400–00	CRANKSHAFT ASSY	1	1				
2	5UH–W1141–00	.CRANK 1	1	1				
3	5UH–W1142–00	.CRANK 2	1	1				
4	30X–11681–00	.PIN, CRANK 1	1	1				
5	93310–633P5	.BEARING	1	1				
6	5UH–11651–00	.ROD, CONNECTING	1	1				
7	90209–33253	.WASHER	2	2				
8	5UH–11536–00	GEAR, DRIVE	1	1				
9	90501–22721	SPRING, COMPRESSION	6	6				
10	93605–10090	PIN, DOWEL	3	3				
11	5UH–11565–00	WASHER, BEARING COVER	1	1				
12	99009–32400	CIRCLIP	1	1				
13	90280–05048	KEY, WOODRUFF	1	1				
14	90201–10321	WASHER, PLATE	1	1				
15	90101–10568	BOLT	1	1				
16	93306–30611	BEARING	1	1				
17	5UH–16181–00	SPACER 1	1	1				
18	5KM–11447–00	SEAL, CRANK	2	2				
19	5UH–11631–00–C0	PISTON (STD)	1	1				
	5UH–11636–00	PISTON (0.50MM O/S)	1	1				AP
	5UH–11638–00	PISTON (1.00MM O/S)	1	1				AP
20	4GB–11610–00	PISTON RING SET (STD)	1	1				
	4GB–11610–20	PISTON RING SET (0.50MM O/S)	1	1				AP
	4GB–11610–40	PISTON RING SET (1.00MM O/S)	1	1				AP
21	93450–19095	CIRCLIP	1	1				
22	55V–11633–00	PIN, PISTON	1	1				
23	93450–19095	CIRCLIP	1	1				

POWER PARTS By 4xQUAD

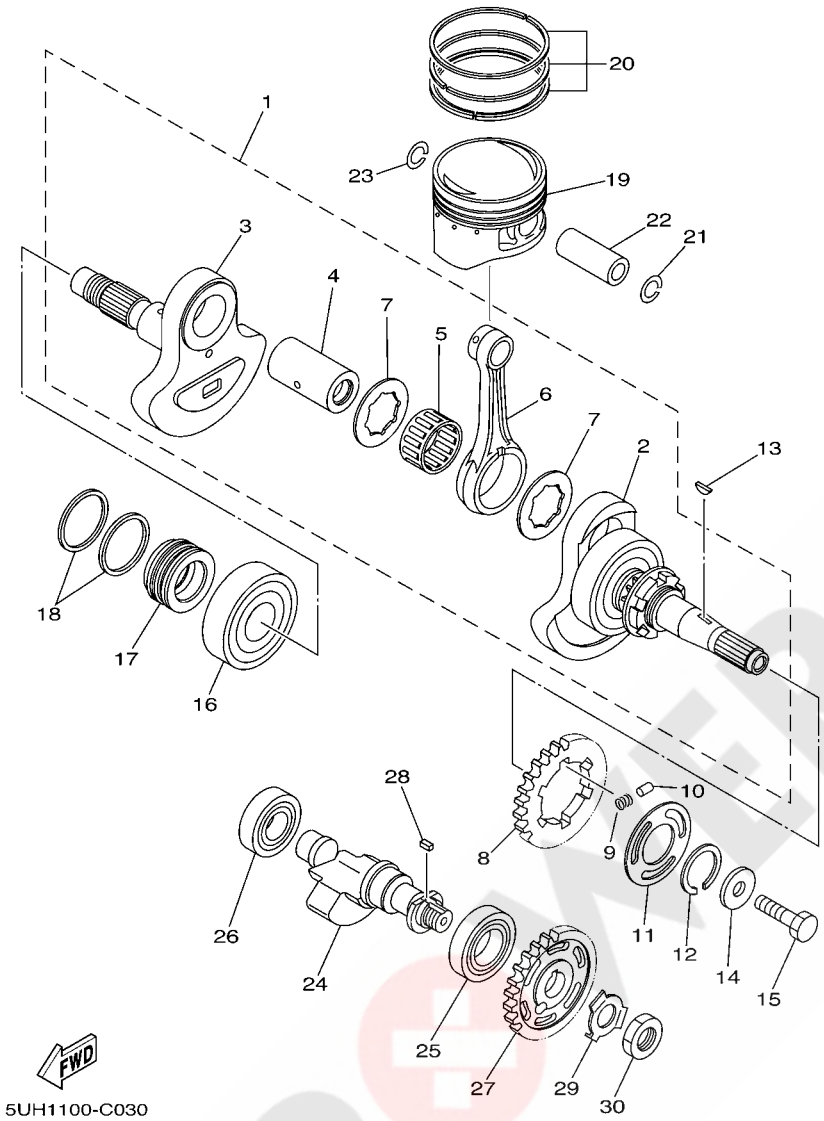

FIG. 3 CRANKSHAFT & PISTON

REF. NO.	PART NO.	DESCRIPTION	EUR	OCE				REMARKS
24	5UH–11454–01	WEIGHT 1	1	1				
25	93306–00612	BEARING	1	1				
26	93306–20402	BEARING	1	1				
27	5UH–11531–00	GEAR, BALANCE WEIGHT	1	1				
28	90282–05013	KEY, STRAIGHT	1	1				
29	90215–16258	WASHER, LOCK	1	1				
30	90170–16326	NUT	1	1				

POWER PARTS By 4xQUAD

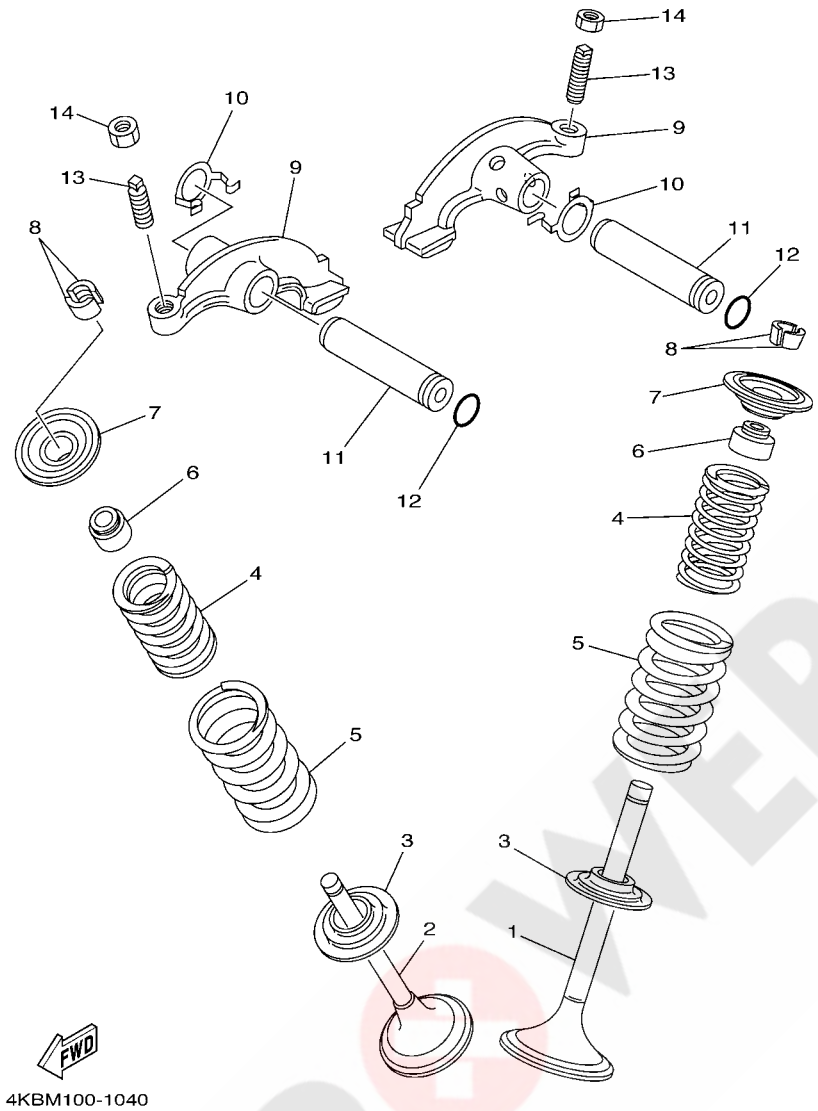

FIG. 4 VALVE

REF. NO.	PART NO.	DESCRIPTION	EUR	OCE				REMARKS
1	1UY–12111–01	VALVE, INTAKE	1	1				
2	1UY–12121–01	VALVE, EXHAUST	1	1				
3	3Y1–12116–00	SEAT, VALVE SPRING	2	2				
4	22U–12113–00	SPRING, VALVE INNER	2	2				
5	1UY–12114–01	SPRING, VALVE OUTER	2	2				
6	M01–12129–00	SEAL, VALVE STEM	2	2				
7	3Y1–12117–01	RETAINER, VALVE SPRING	2	2				
8	1J7–12118–00	COTTER, VALVE	4	4				
9	3GD–12151–11	ARM, VALVE ROCKER	2	2				
10	90206–12001	WASHER, WAVE	2	2				
11	4SH–12156–00	SHAFT, ROCKER 2	2	2				
12	93210–09165	O-RING	2	2				
13	31G–12159–02	SCREW, VALVE ADJUSTING	2	2				
14	31G–12158–00	NUT, LOCK	2	2				

POWER PARTS By ATQUAD

FIG. 5 CAMSHAFT & CHAIN

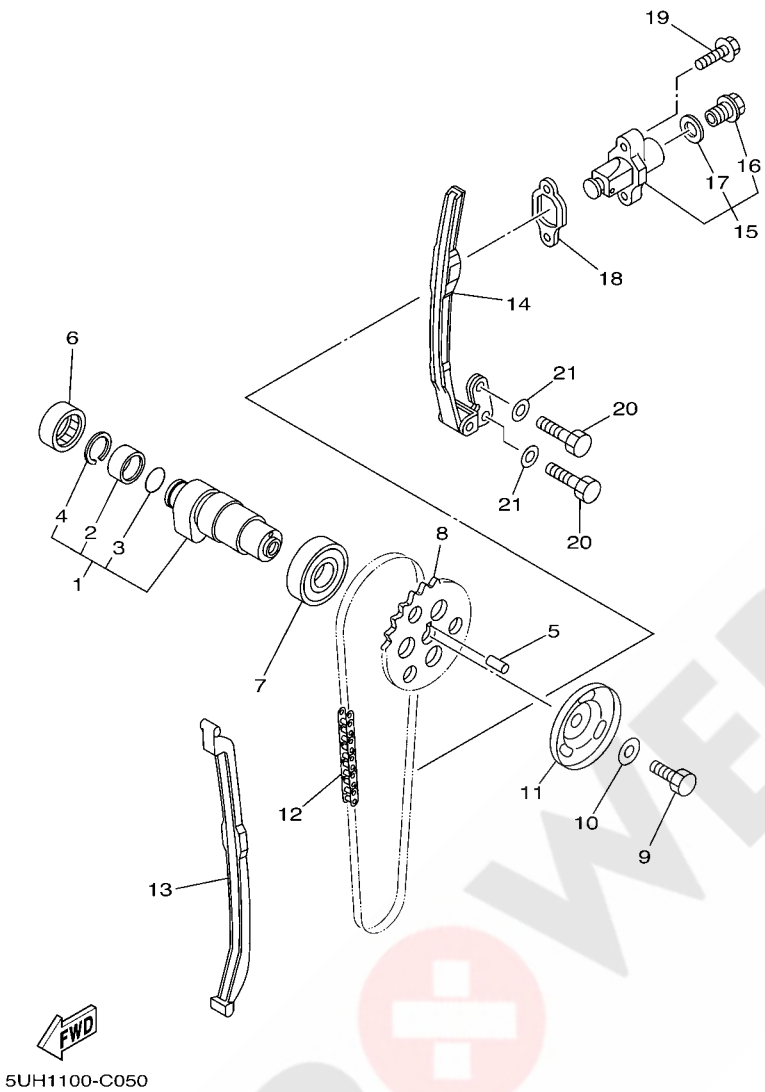

REF. NO.	PART NO.	DESCRIPTION	EUR	OCE				REMARKS
1	5UH–12170–00	CAMSHAFT ASSY 1	1	1				
2	90387–20013	.COLLAR	1	1				
3	93210–17003	.O-RING	1	1				
4	93410–20038	.CIRCLIP	1	1				
5	93604–10011	PIN, DOWEL	1	1				
6	93315–32516	BEARING	1	1				
7	93306–00502	BEARING	1	1				
8	5UH–12176–00	SPROCKET, CAM CHAIN	1	1				
9	90101–10303	BOLT	1	1				
10	90201–10591	WASHER, PLATE	1	1				
11	4KB–11145–00	PLATE, BREATHER 2	1	1				
12	94591–87110	CHAIN (92RH2005-110M)	1	1				
13	5UH–12231–00	GUIDE, STOPPER 1	1	1				
14	5UH–12241–00	GUIDE, STOPPER 2	1	1				
15	31G–12210–01	TENSIONER ASSY, CAM CHAIN	1	1				
16	31G–12222–00	.PLUG	1	1				
17	31G–12214–00	.GASKET	1	1				
18	3GD–12213–00	GASKET, TENSIONER CASE	1	1				
19	95027–06025	BOLT, FLANGE	2	2				
20	97027–06016	BOLT	2	2				
21	92907–06600	WASHER, PLATE	2	2				

POWER PARTS By 4xQUAD

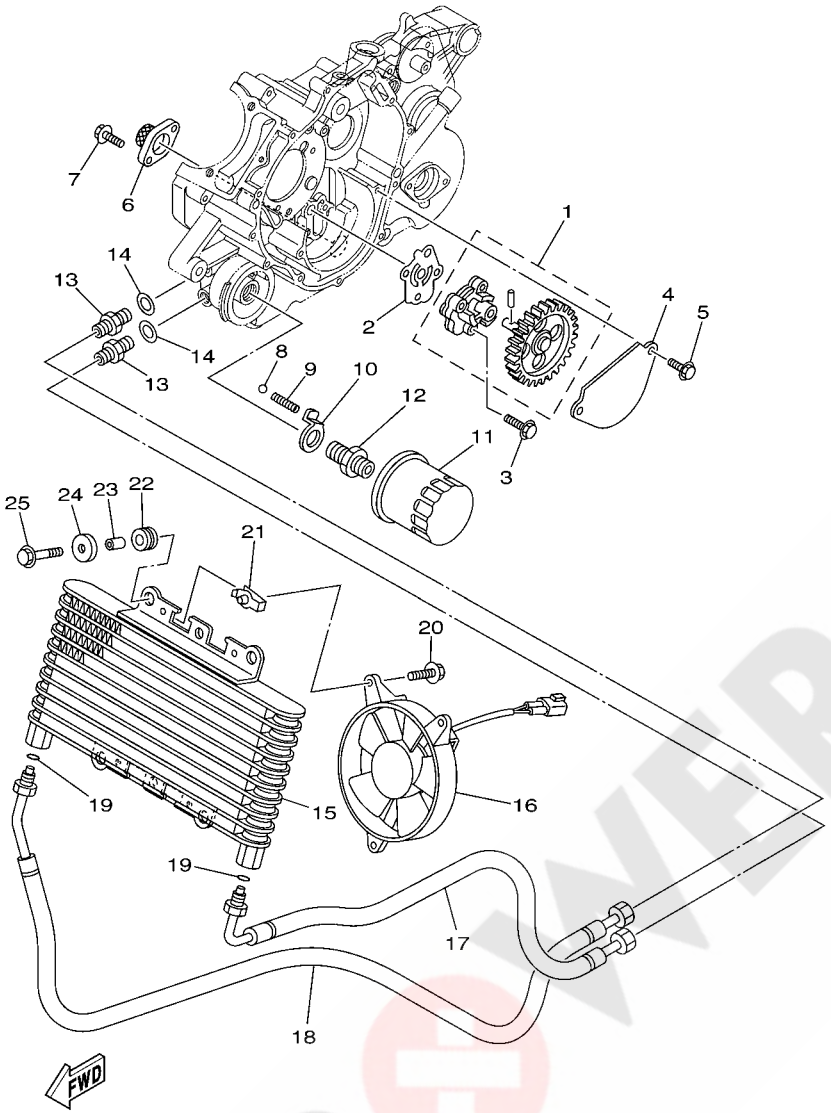

5UH1100-C060

FIG. 6 OIL PUMP

REF. NO.	PART NO.	DESCRIPTION	EUR	OCE				REMARKS
1	5UH–13300–00	OIL PUMP ASSY	1	1				
2	5UH–13329–00	GASKET, PUMP COVER	1	1				
3	95027–06025	BOLT, FLANGE	3	3				
4	5UH–13327–00	COVER, PUMP GEAR	1	1				
5	95027–06012	BOLT, FLANGE	2	2				
6	5UH–13411–00	STRAINER, OIL	1	1				
7	90105–05361	BOLT, FLANGE	2	2				
8	93505–16006	BALL	1	1				
9	90501–101A7	SPRING, COMPRESSION	1	1				
10	5UH–1319K–00	PLATE	1	1				
11	5GH–13440–00	ELEMENT ASSY, OIL CLEANER	1	1				
12	90401–20145	BOLT, UNION	1	1				
13	51Y–13132–50	JOINT	2	2				
14	90430–14043	GASKET	2	2				
15	5UH–E3480–00	ELEMENT, OIL COOLER	1	1				
16	5UH–E2405–00	BLOWER ASSY	1	1				
17	5UH–E3464–00	HOSE, OIL 1	1	1				
18	5UH–E3465–00	HOSE, OIL 2	1	1				
19	93210–08561	O-RING	2	2				
20	5UH–E3573–00	BOLT 1	3	3				
21	5UH–E3577–00	CLIP	3	3				
22	90480–15235	GROMMET	4	4				
23	90387–060A7	COLLAR	4	4				
24	90209–06174	WASHER	4	4				
25	95807–06020	BOLT, FLANGE	4	4				

POWER PARTS By ATVQUAD

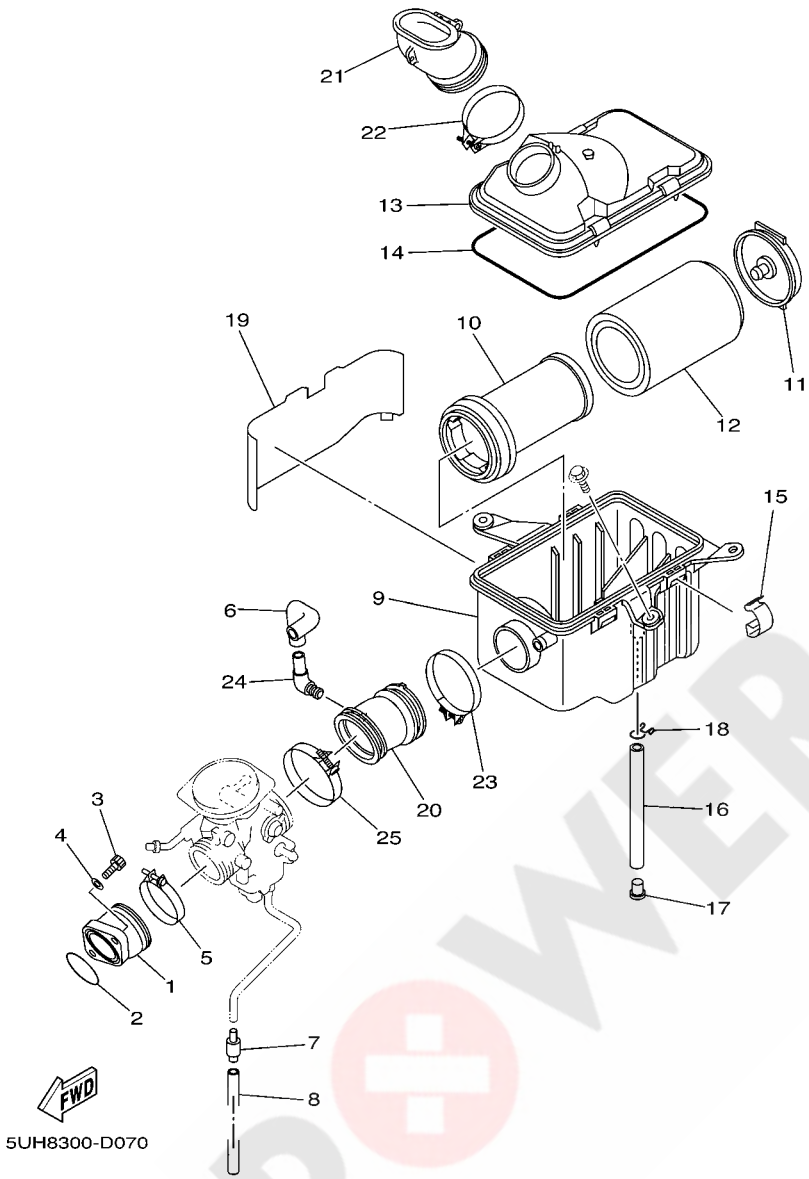

FIG. 7 INTAKE

REF. NO.	PART NO.	DESCRIPTION	EUR	OCE				REMARKS
1	5UH–13586–00	JOINT, CARBURETOR 1	1	1				
2	93210–44545	O-RING	1	1				
3	91317–08025	BOLT	2	2				
4	90201–08085	WASHER, PLATE	2	2				
5	90450–47001	HOSE CLAMP ASSY	1	1				
6	5UH–E4349–00	PIPE	1	1				
7	24W–14193–00	PIPE	1	1				
8	91A20–07014	TUBE, FLEXIBLE VINYL	1	1				
9	5UH–E4411–00	CASE, AIR CLEANER 1	1	1				
10	5UH–E4458–00	GUIDE	1	1				
11	5UH–E4468–00	PLATE,ELEMENT FITTING	1	1				
12	5UH–E4451–10	ELEMENT, AIR CLEANER	1	1				
13	5UH–E4412–00	CAP, CLEANER CASE 1	1	1				
14	5UH–E4462–00	SEAL	1	1				
15	5UH–E4424–00	CLIP, CAP FITTING	4	4				
16	5UH–E4769–10	PIPE, DRAIN	1	1				
17	5UH–E4191–00	PLUG, DRAIN	1	1				
18	5UH–E4438–00	CLIP, DRAIN CLEANER	1	1				
19	5ND–E442F–00	PROTECTOR	1	1				
20	5UH–E4453–00	JOINT, AIR CLEANER 1	1	1				
21	5ND–E4437–02	DUCT	1	1				
22	90460–58124	CLAMP, HOSE	1	1				
23	90460–58124	CLAMP, HOSE	1	1				
24	31A–14419–00	PIPE	1	1				
25	90450–56006	HOSE CLAMP ASSY	1	1				

POWER PARTS By xQUAD

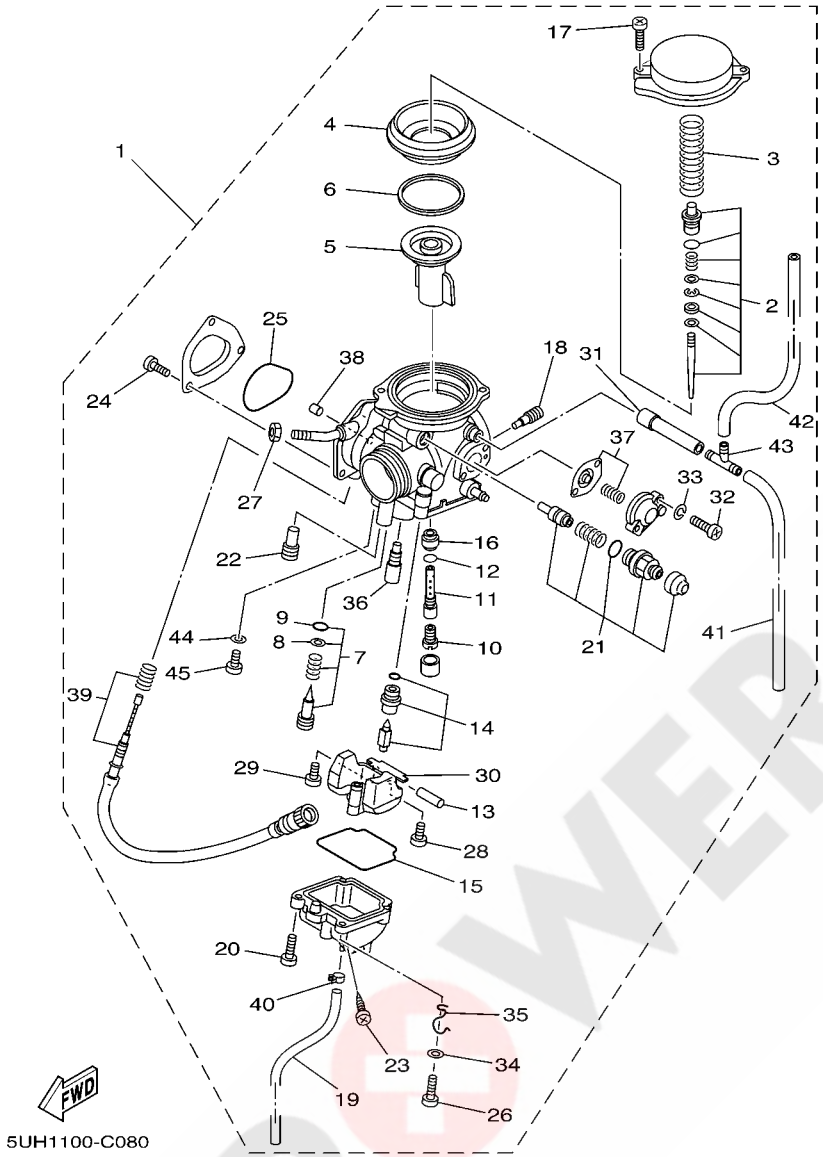

FIG. 8 CARBURETOR

REF. NO.	PART NO.	DESCRIPTION	EUR	OCE				REMARKS
1	5UH–E4101–00	CARBURETOR ASSY 1	1	1				
2	5UH–1490J–00	.NEEDLE SET	1	1				
3	5DM–14933–00	.SPRING, DIAPHRAGM	1	1				
4	5GH–14940–10	.DIAPHRAGM ASSY	1	1				
5	5DM–14112–00	.VALVE, THROTTLE 1	1	1				
6	5GH–14918–10	.RING	1	1				
7	5FU–14105–10	.PILOT SCREW SET	1	1				WHITE SPRING
8	3H1–14962–00	..WASHER	1	1				
9	3H1–14147–00	..O-RING	1	1				
10	3G2–1423E–51	.JET, MAIN (#128.8)	1	1				
11	5DM–14261–00	.HOLDER	1	1				
12	583–14561–00	.O-RING	1	1				
13	127–14186–00	.PIN, FLOAT	1	1				
14	4SV–14107–20	.NEEDLE VALVE SET	1	1				
15	5DM–14561–00	.O-RING	1	1				
16	5DM–14141–42	.NOZZLE, MAIN	1	1				
17	4KM–14216–00	.SCREW	2	2				
18	1HX–14231–16	.JET, MAIN (# 80)	1	1				
19	4KB–14193–20	.PIPE	1	1				
20	98580–04010	.SCREW, PAN HEAD	3	3				
21	5UH–1410A–00	.STARTER SET	1	1				
22	3G2–1423A–62	.JET, MAIN (#57.5)	1	1				
23	3FV–14191–00	.PLUG, DRAIN	1	1				
24	98507–04006	.SCREW, PAN HEAD	3	3				
25	5FU–E4147–00	.O-RING	1	1				
26	98507–04014	.SCREW, PAN HEAD	1	1				
27	522–14161–00	.NUT, CABLE ADJUSTING	1	1				

POWER PARTS By 4WQUAD

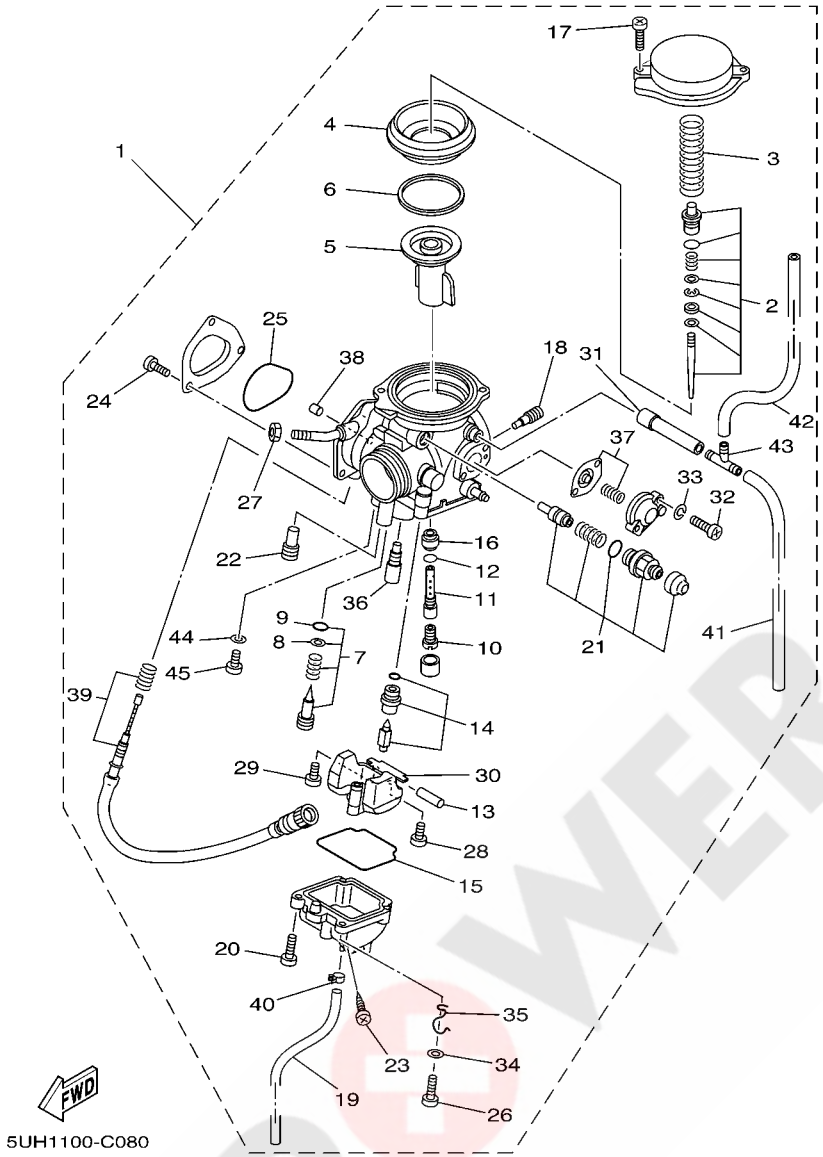

FIG. 8 CARBURETOR

REF. NO.	PART NO.	DESCRIPTION	EUR	OCE				REMARKS
28	98507–04008	.SCREW, PAN HEAD	1	1				
29	1FN–14565–00	.SCREW	1	1				
30	5DM–14985–00	.FLOAT	1	1				
31	5FU–14197–00	.PIPE	1	1				
32	98501–04014	.SCREW, PAN HEAD	2	2				
33	92902–04100	.WASHER, SPRING	2	2				
34	92907–04600	.WASHER	1	1				
35	5GH–14937–00	.CLIP	1	1				
36	4KM–14142–17	.JET, PILOT (# 17.5)	1	1				
37	5EL–1490H–00	.DIAPHRAGM SET 5	1	1				
38	5FU–E4155–00	.GUIDE, CABLE	1	1				
39	5UH–14103–00	.THROTTLE SCREW SET	1	1				
40	4XE–14937–00	.CLIP	1	1				
41	5UH–14348–00	.PIPE 1	1	1				
42	7T9–14987–00	.HOSE	1	1				
43	5FU–14167–00	.CONNECTOR	1	1				
44	256–14956–01	.WASHER	1	1				
45	3DM–14216–00	.SCREW	1	1				

POWER PARTS
By axQUAD

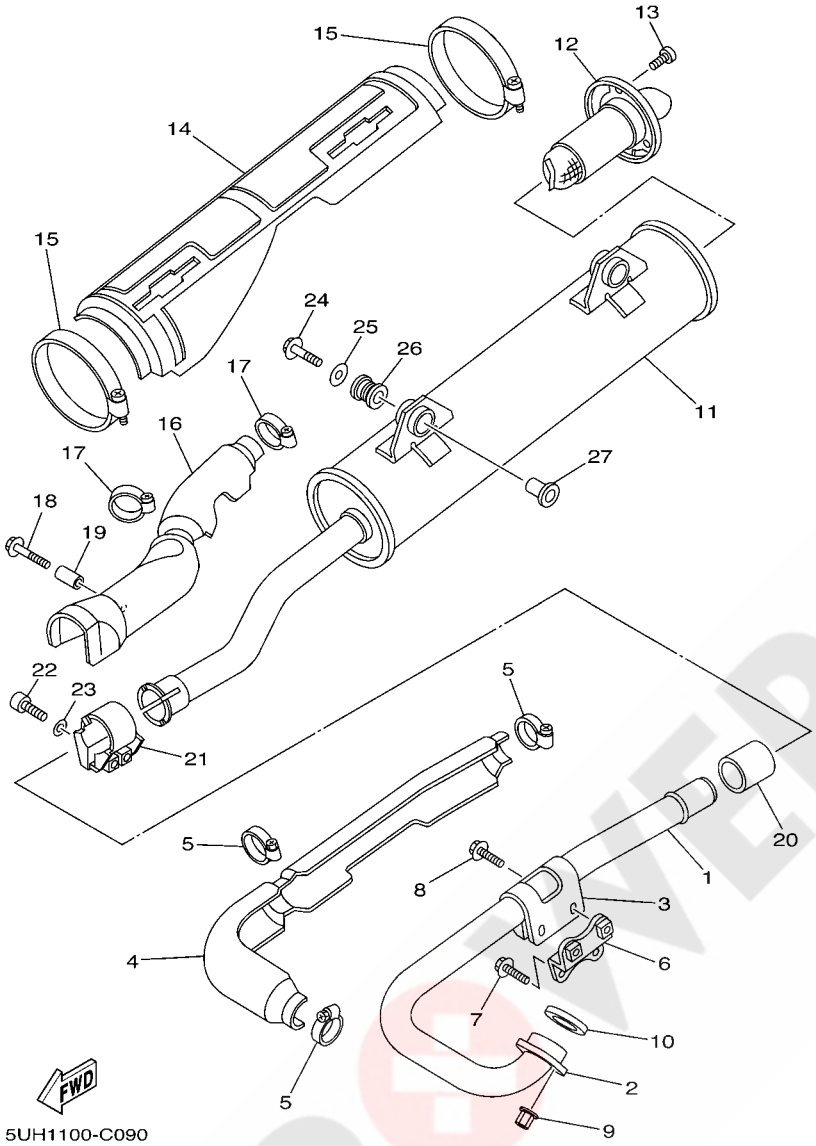

FIG. 9 EXHAUST

REF. NO.	PART NO.	DESCRIPTION	EUR	OCE				REMARKS
1	5UH–E4611–00	PIPE, EXHAUST 1	1	1				
2	5UH–E4612–00	NUT, RING	1	1				
3	5UH–E477R–00	BAND 1	1	1				
4	5UH–E4628–00	PROTECTOR, EXHAUST PIPE	1	1				
5	5UH–E477T–00	BAND	3	3				
6	5UH–E477K–00	PLATE 1	1	1				
7	9581P–06016	BOLT, FLANGE	2	2				
8	95817–06020	BOLT, FLANGE	2	2				
9	90179–06668	NUT	2	2				
10	3GD–14613–00	GASKET, EXHAUST PIPE	1	1				
11	5UH–E4711–00	MUFFLER 1	1	1				
12	5ND–E4752–00	PIPE, OUTLET	1	1				
13	5ND–E4719–00	BOLT, MUFFLER	3	3				
14	5UH–E4718–00	PROTECTOR, MUFFLER 1	1	1				
15	5ND–E4788–00	BAND, SILENCER	2	2				
16	5UH–E4728–00	PROTECTOR, MUFFLER 2	1	1				
17	5UH–E477T–00	BAND	2	2				
18	9580P–06035	BOLT, FLANGE	1	1				
19	5UH–E4638–00	COLLAR	1	1				
20	5ND–E4714–00	GASKET, MUFFLER	1	1				
21	5ND–E4715–00	BAND, MUFFLER	1	1				
22	5ND–E4777–00	BOLT	2	2				
23	5ND–E4759–00	WASHER	2	2				
24	95827–10040	BOLT, FLANGE	2	2				
25	90201–106E0	WASHER, PLATE	2	2				
26	5ND–E4737–00	DAMPER, MUFFLER	2	2				
27	90387–10636	COLLAR	2	2				

POWER PARTS By 4QUAD

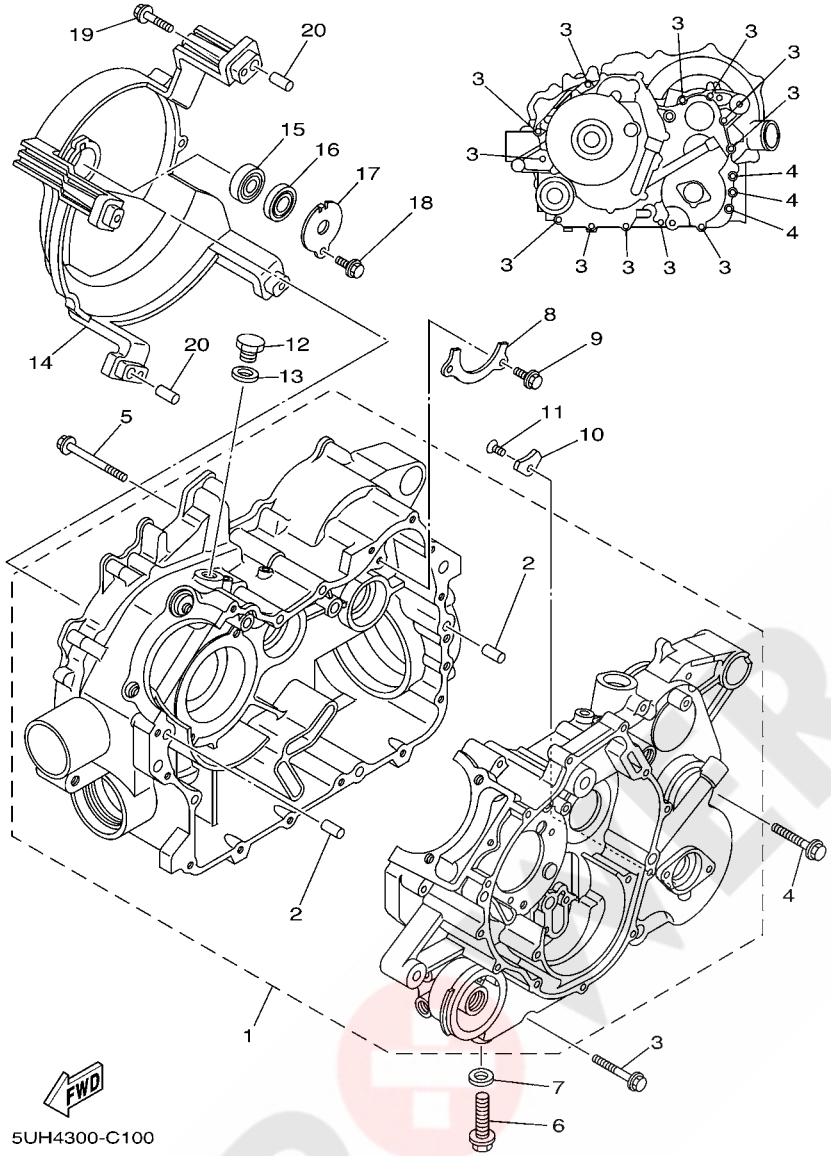

FIG. 10 CRANKCASE

REF. NO.	PART NO.	DESCRIPTION	EUR	OCE				REMARKS
1	5UH–15100–00	CRANKCASE ASSY	1	1				
2	99530–10116	.PIN, DOWEL	2	2				
3	95027–06050	BOLT, FLANGE	12	12				
4	95027–08045	BOLT, FLANGE	3	3				
5	95027–06070	BOLT, FLANGE	3	3				
6	95027–12040	BOLT, FLANGE	1	1				
7	90201–12172	WASHER, PLATE	1	1				
8	5GH–15388–00	PLATE, BEARING COVER	1	1				
9	95827–06012	BOLT, FLANGE	2	2				
10	2K7–15383–00	PLATE, BEARING COVER	1	1				
11	90151–06014	SCREW, COUNTERSUNK	1	1				
12	90340–14029	PLUG, STRAIGHT SCREW	1	1				
13	214–11198–01	GASKET	1	1				
14	5UH–15442–00	HOUSING, BEARING	1	1				
15	93306–20120	BEARING	1	1				
16	93101–12168	OIL SEAL	1	1				
17	4WV–15381–00	PLATE, BEARING COVER	1	1				
18	95027–06012	BOLT, FLANGE	1	1				
19	95827–06030	BOLT, FLANGE	4	4				
20	99530–10116	PIN, DOWEL	2	2				

PGEAR PARTS By ATQUAD

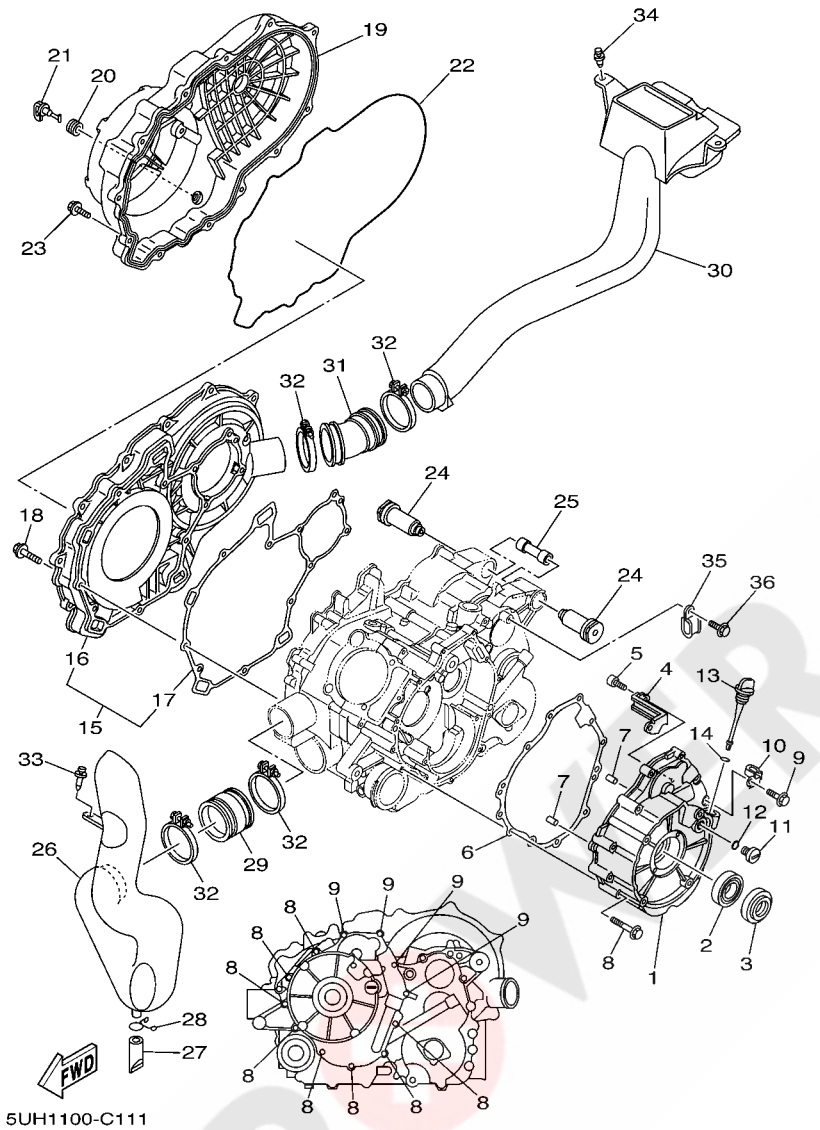

FIG. 11 CRANKCASE COVER 1

REF. NO.	PART NO.	DESCRIPTION	EUR	OCE				REMARKS
1	5UH–15411–00	COVER, CRANKCASE 1	1	1				
2	93306–07801	BEARING	1	1				
3	93102–28476	OIL SEAL	1	1				
4	5UH–15113–00	PLATE	1	1				
5	91317–05012	BOLT	2	2				
6	5UH–15451–00	GASKET, CRANKCASE COVER 1	1	1				
7	99530–10116	PIN, DOWEL	2	2				
8	95027–06050	BOLT, FLANGE	8	8				
9	95027–06030	BOLT, FLANGE	4	4				
10	90465–08127	CLAMP	1	1				
11	90340–14117	PLUG, STRAIGHT SCREW	1	1				
12	93210–14369	O-RING	1	1				
13	517–15362–02	PLUG, OIL LEVEL	1	1				
14	93210–19026	O-RING	1	1				
15	5UH–15420–00	CRANKCASE COVER ASSY 2	1	1				
16	5UH–15421–00	.COVER, CRANKCASE 2	1	1				
17	5UH–15315–00	.SEAL, CRANKCASE	1	1				
18	95827–06030	BOLT, FLANGE	9	9				
19	5UH–15431–00	COVER, CRANKCASE 3	1	1				
20	90480–13018	GROMMET	1	1				
21	5KM–15351–00	PLUG, DRAIN	1	1				
22	5UH–15379–00	SEAL, CRANKCASE	1	1				
23	95827–06020	BOLT, FLANGE	14	14				
24	90388–10001	DAMPER	2	2				
25	5UH–15317–00	SPACER, ENGINE MOUNT	1	1				
26	5UH–E5471–00	DUCT, AIR	1	1				
27	5BF–1443E–00	PIPE, DRAIN	1	1				

POWER PARTS By axQUAD

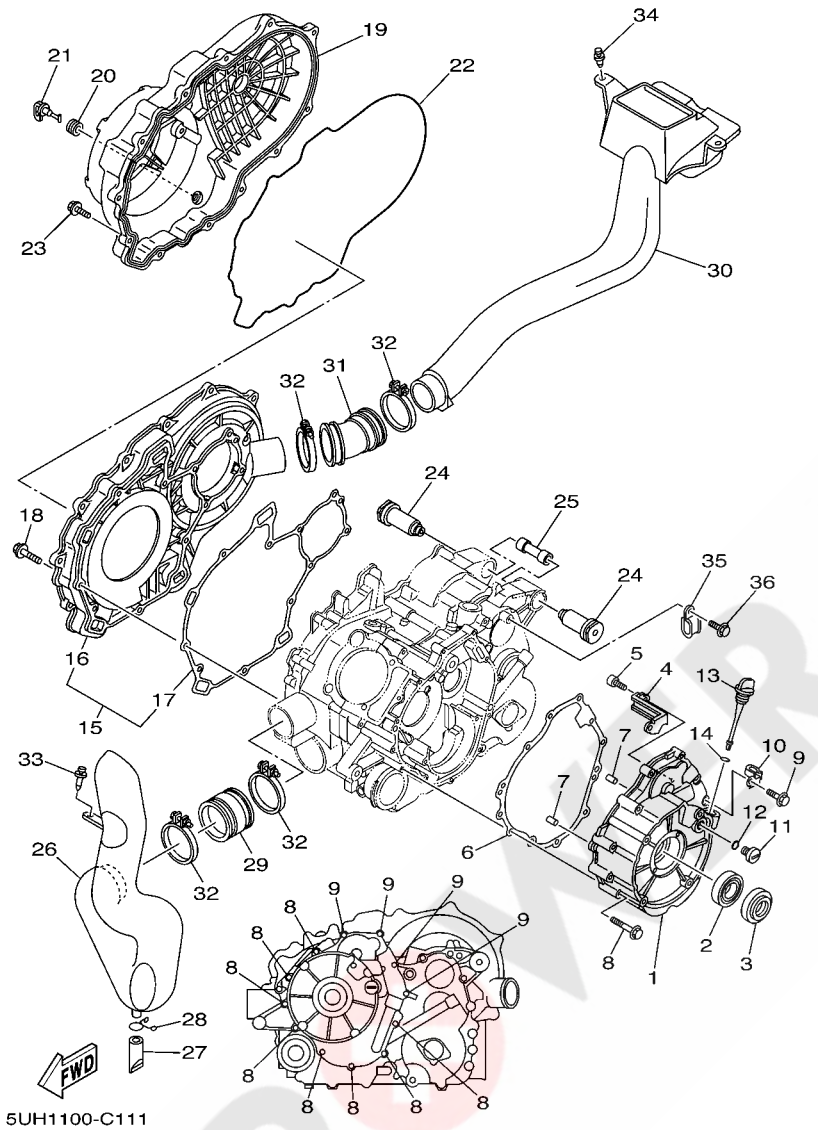

FIG. 11 CRANKCASE COVER 1

REF. NO.	PART NO.	DESCRIPTION	EUR	OCE				REMARKS
28	90467–16195	CLIP	1	1				
29	5ND–E5472–00	SEAL, AIR DUCT	1	1				
30	5ND–E5473–00	DUCT, AIR	1	1				
31	5UH–E5474–00	SEAL, AIR DUCT	1	1				
32	90450–64002	HOSE CLAMP ASSY	4	4				
33	90269–06800	RIVET	1	1				
34	90269–08813	RIVET	2	2				
35	90461–08134	CLAMP	1	1				
36	95027–06012	BOLT, FLANGE	1	1				

POWER PARTS By axoUAD

FIG. 12 STARTER

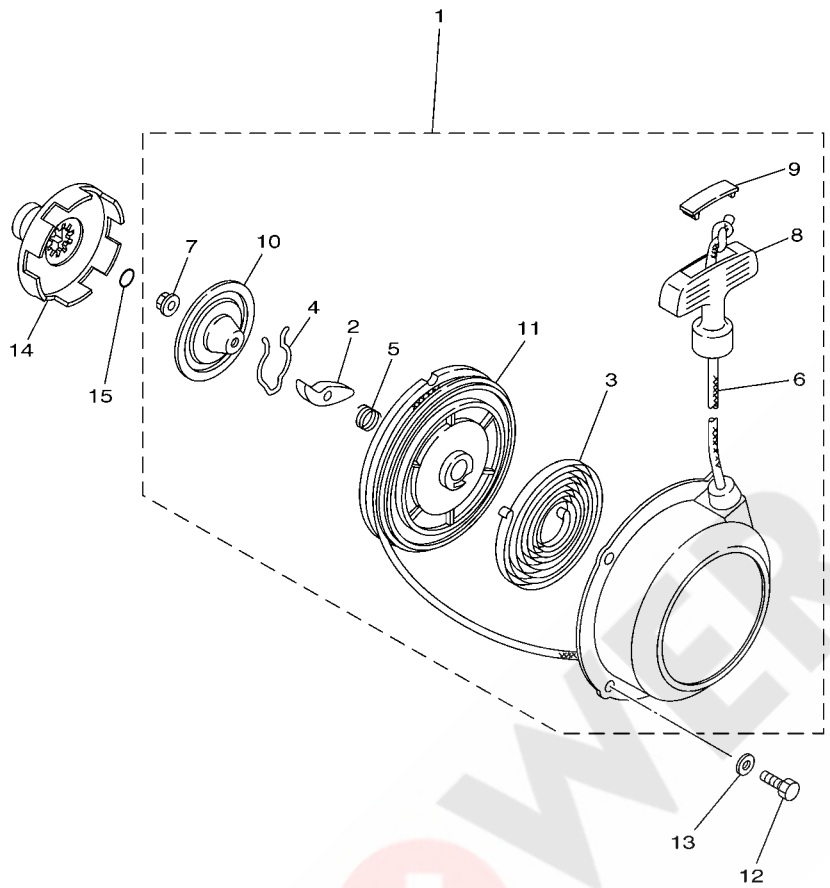

5UH1100-C120

REF. NO.	PART NO.	DESCRIPTION	EUR	OCE				REMARKS
1	5UH–15710–00	STARTER ASSY	1	1				
2	21V–15741–00	.PAWL, DRIVE	1	1				
3	5UH–15713–00	.SPRING, STARTER	1	1				
4	21V–15715–01	.SPRING, FRICTION	1	1				
5	21V–15767–00	.SPRING	1	1				
6	21V–15751–00	.WIRE, STARTER	1	1				
7	95702–06500	.NUT, FLANGE	1	1				
8	3X3–15755–00	.HANDLE, STARTER	1	1				
9	21V–15779–00	.COVER	1	1				
10	5UH–15716–00	.PLATE, DRIVE	1	1				
11	24W–15714–00	.DRUM, SHEAVE	1	1				
12	97017–06014	BOLT	4	4				
13	92907–06600	WASHER, PLATE	4	4				
14	5KM–15723–00	PULLEY, STARTER	1	1				
15	93210–16290	O-RING	1	1				

POWER PARTS By 4xQUAD

FIG. 13 STARTER CLUTCH

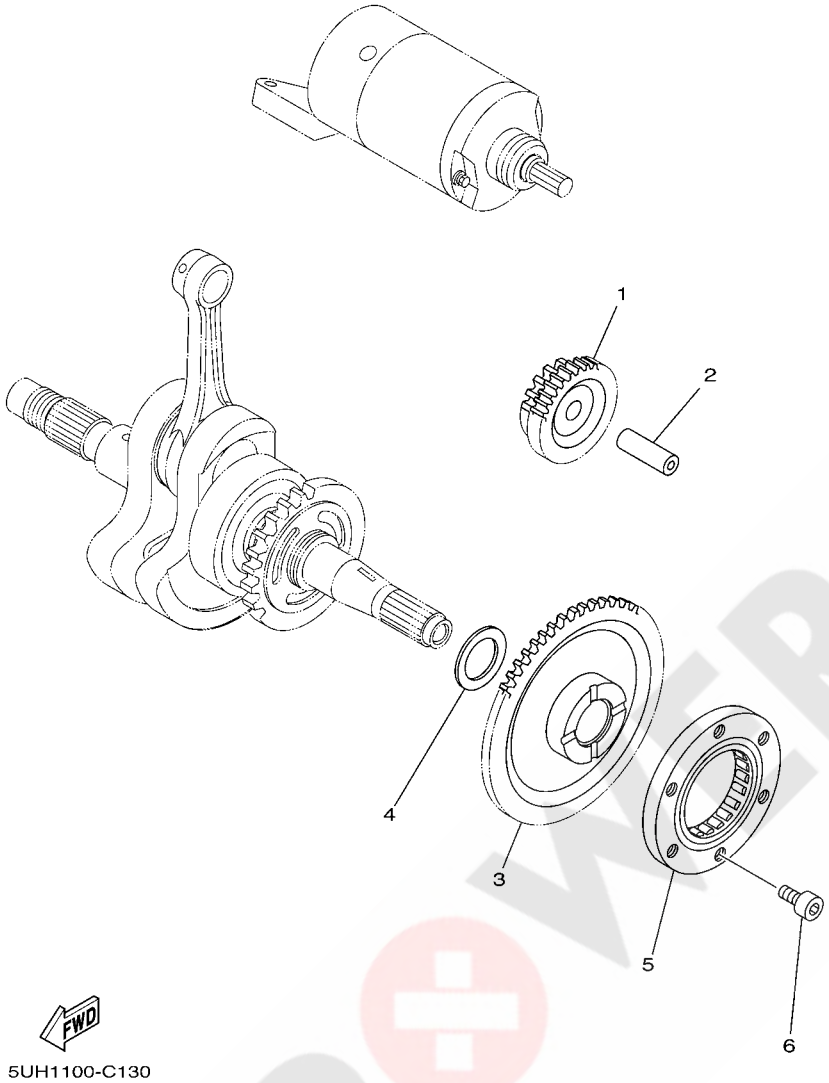

REF. NO.	PART NO.	DESCRIPTION	EUR	OCE				REMARKS
1	5UH–15512–00	GEAR, IDLER 1	1	1				
2	1VJ–15521–00	SHAFT 1	1	1				
3	5UH–15517–00	GEAR, IDLER 2	1	1				
4	90201–25290	WASHER, PLATE	1	1				
5	5KM–15590–00	STARTER ONE-WAY ASSY	1	1				
6	91317–08016	BOLT	3	3				

POWER PARTS By 4xQUAD

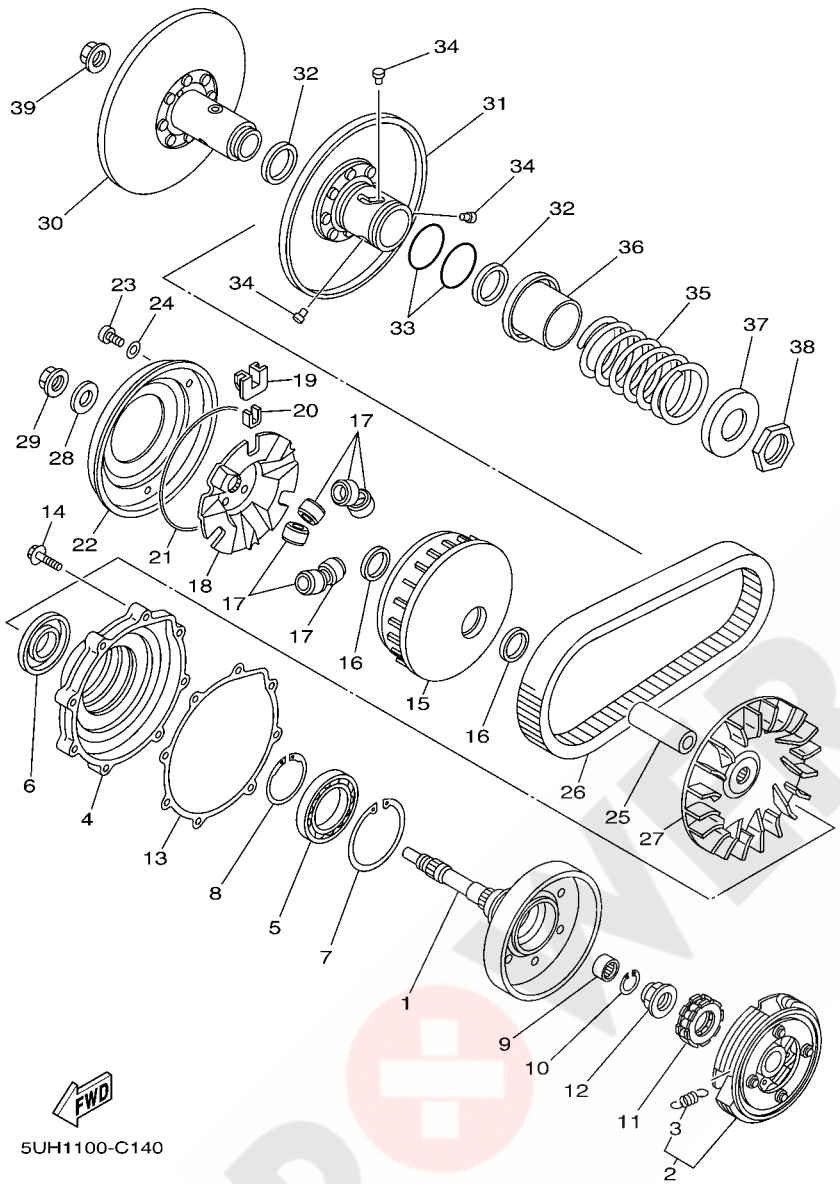

FIG. 14 CLUTCH

REF. NO.	PART NO.	DESCRIPTION	EUR	OCE				REMARKS
1	5UH–16611–00	CLUTCH HOUSING COMP.	1	1				
2	5UH–16620–00	CLUTCH CARRIER ASSY	1	1				
3	5UH–16626–00	.SPRING, CLUTCH WEIGHT 1	4	4				
4	5UH–15163–00	HOUSING, BEARING 1	1	1				
5	93316–01003	BEARING	1	1				
6	93102–32483	OIL SEAL	1	1				
7	99009–80500	CIRCLIP	1	1				
8	93410–46079	CIRCLIP	1	1				
9	93315–21813	BEARING	1	1				
10	93450–24062	CIRCLIP	1	1				
11	5GH–16664–00	BEARING, ONE WAY	1	1				
12	90179–22005	NUT	1	1				
13	5UH–15463–00	GASKET, CARBURETOR COVER 2	1	1				
14	95027–06030	BOLT, FLANGE	8	8				
15	5UH–17620–00	PRIMARY SLIDING SHEAVE COMP.	1	1				
16	93101–31167	OIL SEAL	2	2				
17	4WV–17632–00	WEIGHT	6	6				
18	5UH–17623–00	CAM	1	1				
19	4WV–17653–00	SLIDER	3	3				
20	4WV–17654–01	SPACER 1	3	3				
21	93211–52001	O-RING	1	1				
22	5UH–17639–00	STOPPER	1	1				
23	90157–04088	SCREW, PAN HEAD	3	3				
24	90201–047R9	WASHER, PLATE	3	3				
25	5UH–17645–00	COLLAR	1	1				
26	5UH–17641–00	V-BELT	1	1				
27	5UH–17611–00	SHEAVE, PRIMARY FIXED	1	1				

POWER PARTS By 4xQUAD

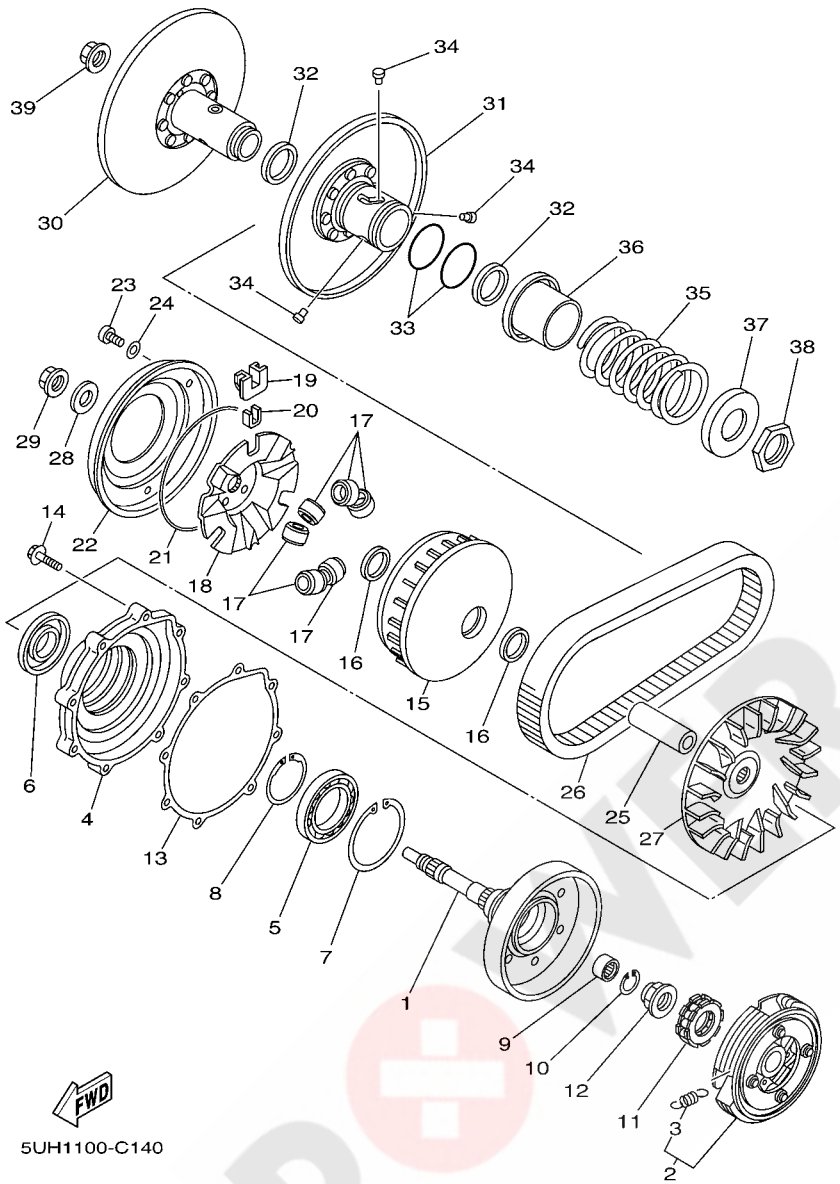

FIG. 14 CLUTCH

REF. NO.	PART NO.	DESCRIPTION	EUR	OCE				REMARKS
28	90201–190T7	WASHER, PLATE	1	1				
29	90179–16001	NUT	1	1				
30	5UH–17660–00	SECONDARY FIXED SHEAVE COMP.	1	1				
31	5UH–17670–00	SECONDARY SLIDING SHEAVE	1	1				
32	93104–41119	OIL SEAL	2	2				
33	93210–44545	O-RING	2	2				
34	4CW–17664–00	PIN, GUIDE	3	3				
35	90501–580A0	SPRING, COMPRESSION	1	1				
36	5UH–17684–00	SEAT, SECONDARY SPRING	1	1				
37	5UH–17644–00	SEAT,SPRING	1	1				
38	90170–36279	NUT	1	1				
39	90179–16001	NUT	1	1				

POWER PARTS By axomo

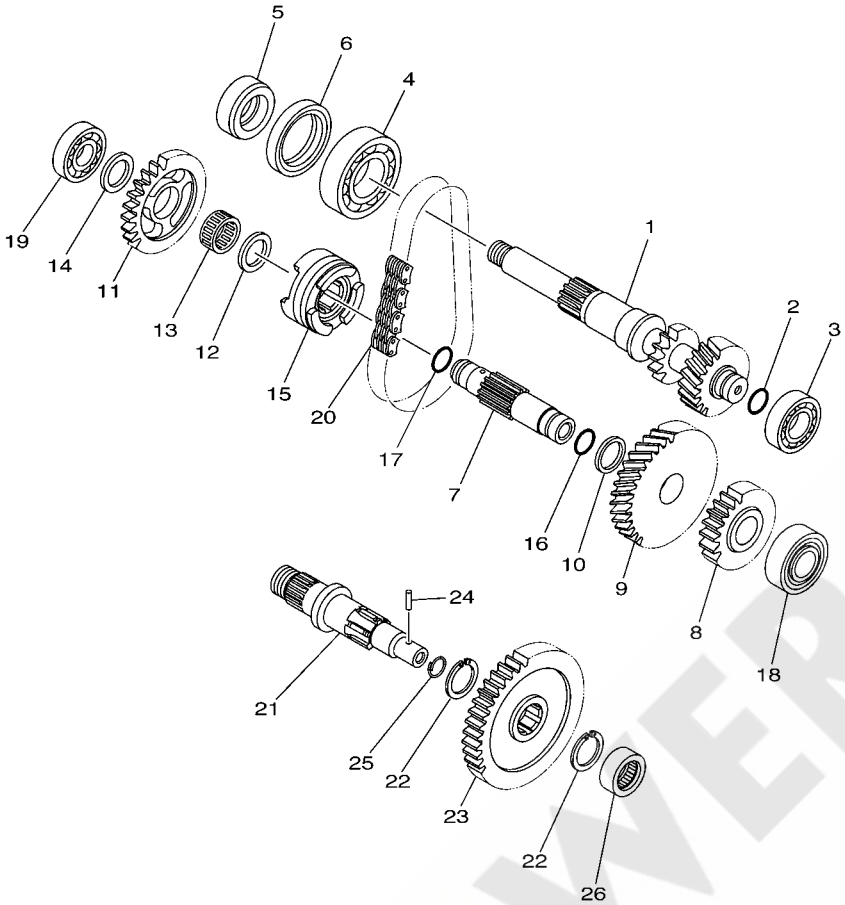

5UH1100-C150

FIG. 15 TRANSMISSION

REF. NO.	PART NO.	DESCRIPTION	EUR	OCE				REMARKS
1	5UH–17681–10	SHAFT, SECONDARY	1	1				
2	93210–17003	O-RING	1	1				
3	93306–00401	BEARING	1	1				
4	93306–20601	BEARING	1	1				
5	5UH–17168–00	COLLAR 2	1	1				
6	93102–42004	OIL SEAL	1	1				
7	5UH–17421–10	AXLE, DRIVE	1	1				
8	5UH–17582–10	GEAR, MIDDLE DRIVE (21T)	1	1				
9	5UH–17223–10	GEAR, HIGH WHEEL (35T)	1	1				
10	90201–210U0	WASHER, PLATE	1	1				
11	5UH–17453–00	SPROCKET, DRIVEN (26T)	1	1				
12	90201–20278	WASHER, PLATE	1	1				
13	93310–420F2	BEARING	1	1				
14	90201–17013	WASHER, PLATE	1	1				
15	5UH–17285–00	CLUTCH, DOG	1	1				
16	93210–17003	O-RING	1	1				
17	93210–14299	O-RING	1	1				
18	93306–20464	BEARING	1	1				
19	93306–20306	BEARING	1	1				
20	94591–54034	CHAIN (23RH302-34ASM)	1	1				
21	5UH–17523–00	SHAFT	1	1				
22	93440–25084	CIRCLIP	2	2				
23	5UH–17583–00	GEAR, MIDDLE DRIVEN (41T)	1	1				
24	93603–14240	PIN, DOWEL	1	1				
25	93440–14155	CIRCLIP	1	1				
26	93311–42077	BEARING	1	1				

POWER PARTS By ATVQUAD

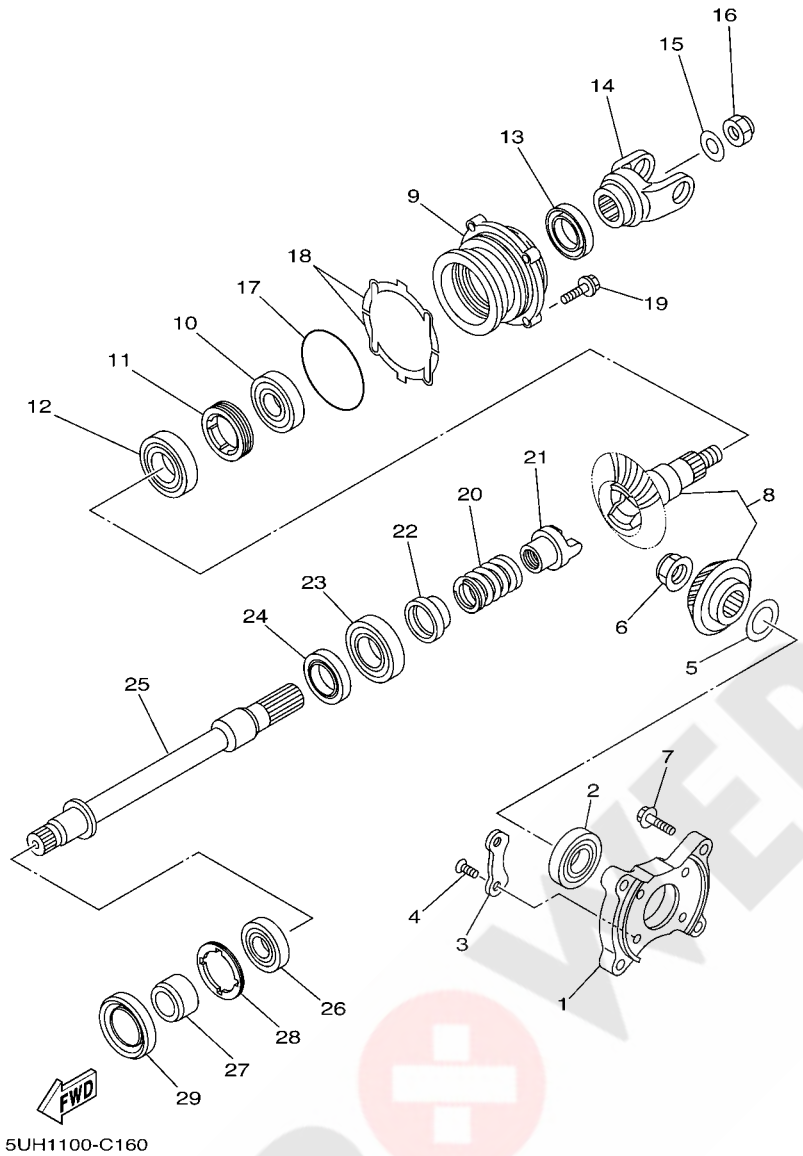

FIG. 16 MIDDLE DRIVE GEAR

REF. NO.	PART NO.	DESCRIPTION	EUR	OCE				REMARKS
1	5UH–17521–00	HOUSING, BEARING	1	1				
2	93306–20532	BEARING	1	1				
3	11H–15383–02	PLATE, BEARING COVER	2	2				
4	90149–08152	SCREW	4	4				
5	5KM–17531–00	SHIM, PINION (0.1T)	1	1				UR
	5KM–17531–10	SHIM, PINION (0.15T)	1	1				UR
	5KM–17531–20	SHIM, PINION (0.2T)	1	1				UR
	5KM–17531–30	SHIM, PINION (0.3T)	1	1				UR
	5KM–17531–40	SHIM, PINION (0.4T)	1	1				UR
	5KM–17531–50	SHIM, PINION (0.5T)	1	1				UR
6	90179–22015	NUT	1	1				
7	95817–08030	BOLT, FLANGE	4	4				
8	5UH–17530–00	PINION SET	1	1				
9	5GH–17551–00	HOUSING, BEARING	1	1				
10	93306–30538	BEARING	1	1				
11	90179–65305	NUT	1	1				
12	93306–20715	BEARING	1	1				
13	93101–35097	OIL SEAL	1	1				
14	5UH–17556–00	YOKE, JOINT	1	1				
15	90201–14633	WASHER, PLATE	1	1				
16	90185–14070	NUT, SELF-LOCKING	1	1				
17	93210–78544	O-RING	1	1				
18	5GH–17531–00	SHIM, PINION (0.1T)	2	2				UR
	5GH–17531–10	SHIM, PINION (0.15T)	2	2				UR
	5GH–17531–20	SHIM, PINION (0.2T)	2	2				UR
	5GH–17531–30	SHIM, PINION (0.3T)	2	2				UR
	5GH–17531–40	SHIM, PINION (0.4T)	2	2				UR

POWER PARTS 砂糖QUAD

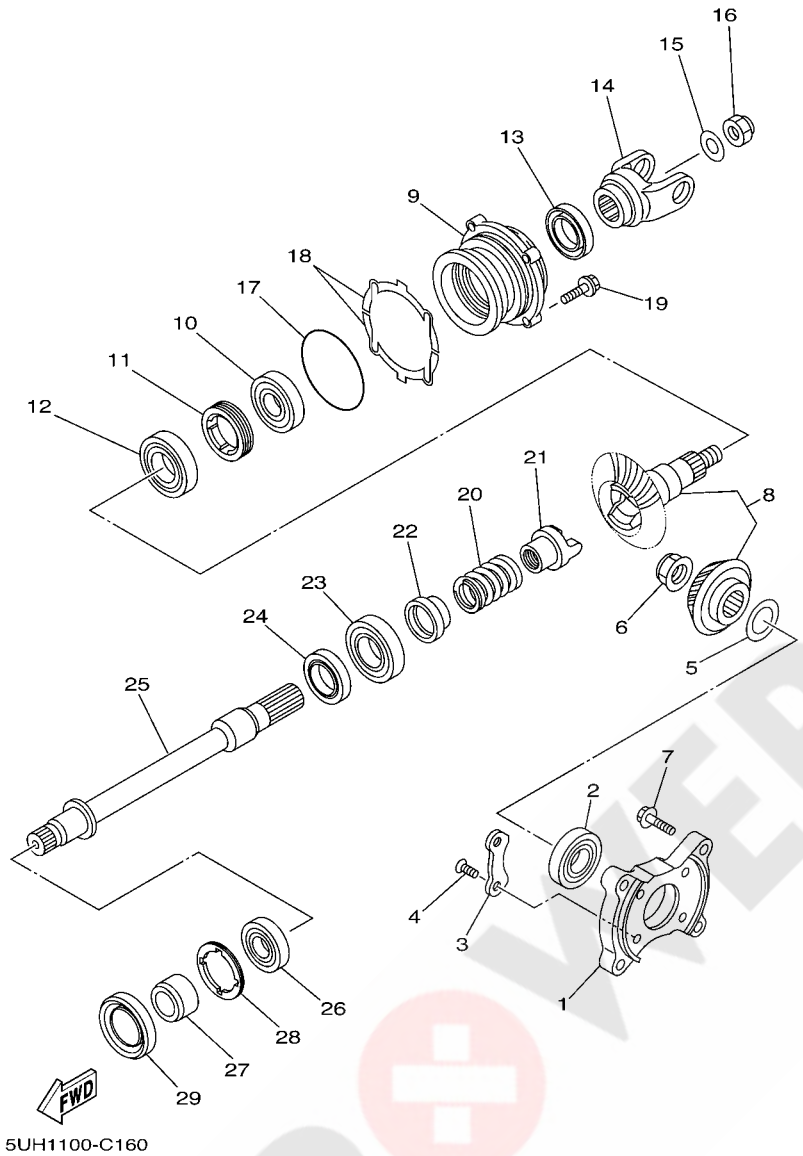

FIG. 16 MIDDLE DRIVE GEAR

REF. NO.	PART NO.	DESCRIPTION	EUR	OCE				REMARKS
18	5GH–17531–50	SHIM, PINION (0.5T)	2	2				UR
	5GH–17531–60	SHIM, PINION (0.6T)	2	2				UR
19	90119–08128	BOLT, WITH WASHER	4	4				
20	90501–650L5	SPRING, COMPRESSION	1	1				
21	4VR–17527–00	CAM, DRIVEN	1	1				
22	5UH–17585–00	COLLAR, GEAR	1	1				
23	93306–00612	BEARING	1	1				
24	93102–30170	OIL SEAL	1	1				
25	5UH–1761A–00	SHAFT, 1	1	1				
26	93306–20582	BEARING	1	1				
27	90387–252R2	COLLAR	1	1				
28	90179–55660	NUT	1	1				
29	93102–35380	OIL SEAL	1	1				

POWER PARTS By 4xQUAD

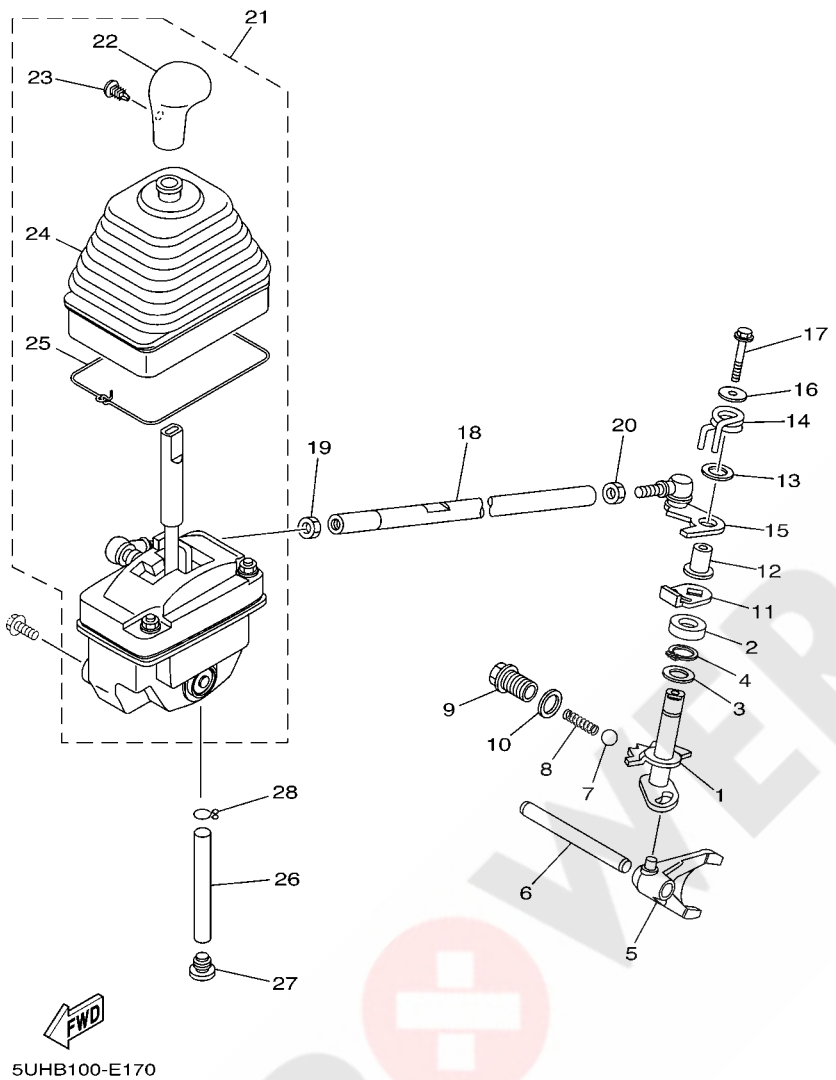

FIG. 17 SHIFT SHAFT

REF. NO.	PART NO.	DESCRIPTION	EUR	OCE				REMARKS
1	5UH–18103–00	SHIFT SHAFT COMP.	1	1				
2	93102–15212	OIL SEAL	1	1				
3	90201–15701	WASHER, PLATE (T=1.0)	1	1				
4	93440–15012	CIRCLIP	1	1				
5	5UH–18511–00	FORK, SHIFT 1	1	1				
6	2A6–18535–00	BAR, SHIFT FORK GUIDE 2	1	1				
7	93503–08007	BALL	1	1				
8	90501–10353	SPRING, COMPRESSION	1	1				
9	90105–14367	BOLT, FLANGE	1	1				
10	90430–14042	GASKET	1	1				
11	4SH–18198–00	LEVER	1	1				
12	90387–0613B	COLLAR	1	1				
13	90201–132G5	WASHER, PLATE	1	1				
14	90508–35764	SPRING, TORSION	1	1				
15	5UH–18191–00	LEVER	1	1				
16	90201–06008	WASHER, PLATE	1	1				
17	95817–06035	BOLT, FLANGE	1	1				
18	5UH–18115–01	ROD, SHIFT	1	1				
19	90170–08358	NUT	1	1				
20	95307–08700	NUT	1	1				
21	5UH–18300–01	SHIFTER ASSY	1	1				
22	5TE–18174–00	.KNOB, SHIFT LEVER	1	1				
23	90269–05055	.RIVET	1	1				
24	5GH–18131–00	.BOOT, SEALING	1	1				
25	5GH–18617–00	.STOPPER,RUBBER	1	1				
26	90446–16001	HOSE (L90)	1	1				
27	5ND–E4191–00	PLUG, DRAIN	1	1				

POWER PARTS By ayoUAD

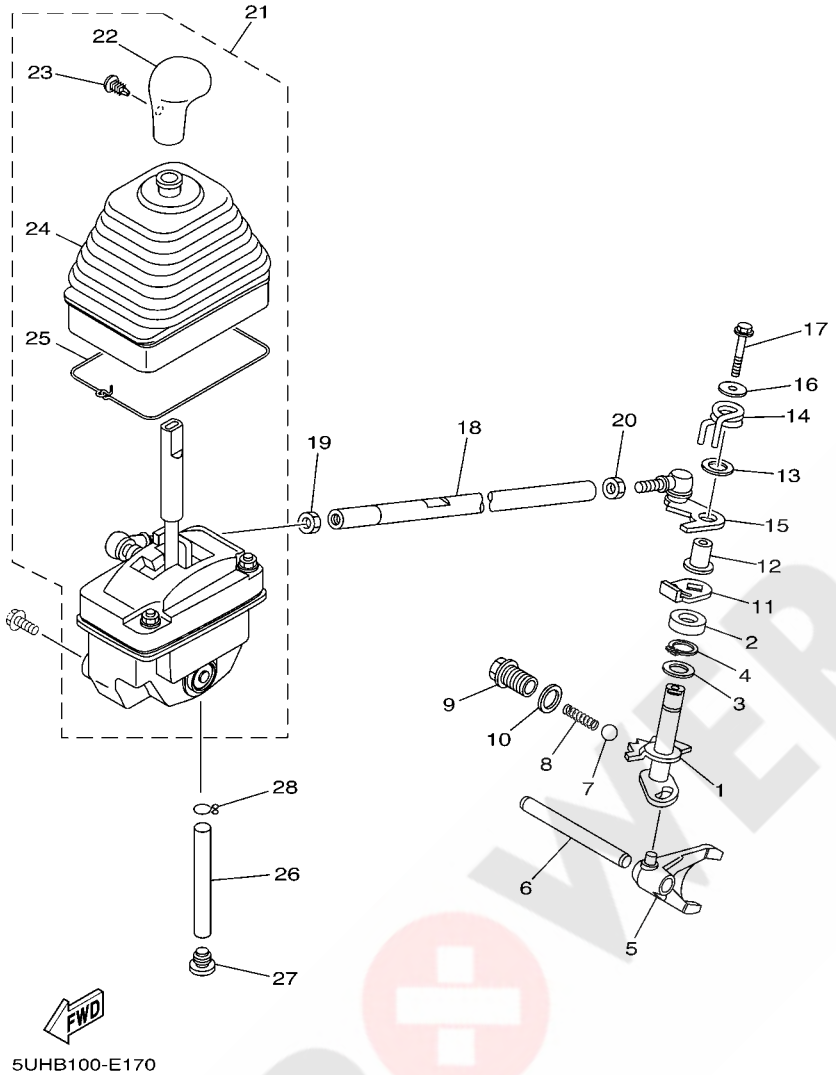

FIG. 17 SHIFT SHAFT

REF. NO.	PART NO.	DESCRIPTION	EUR	OCE				REMARKS
28	90467–15012	CLIP	1	1				

POWER PARTS By 4xQUAD

FIG. 18 FRAME

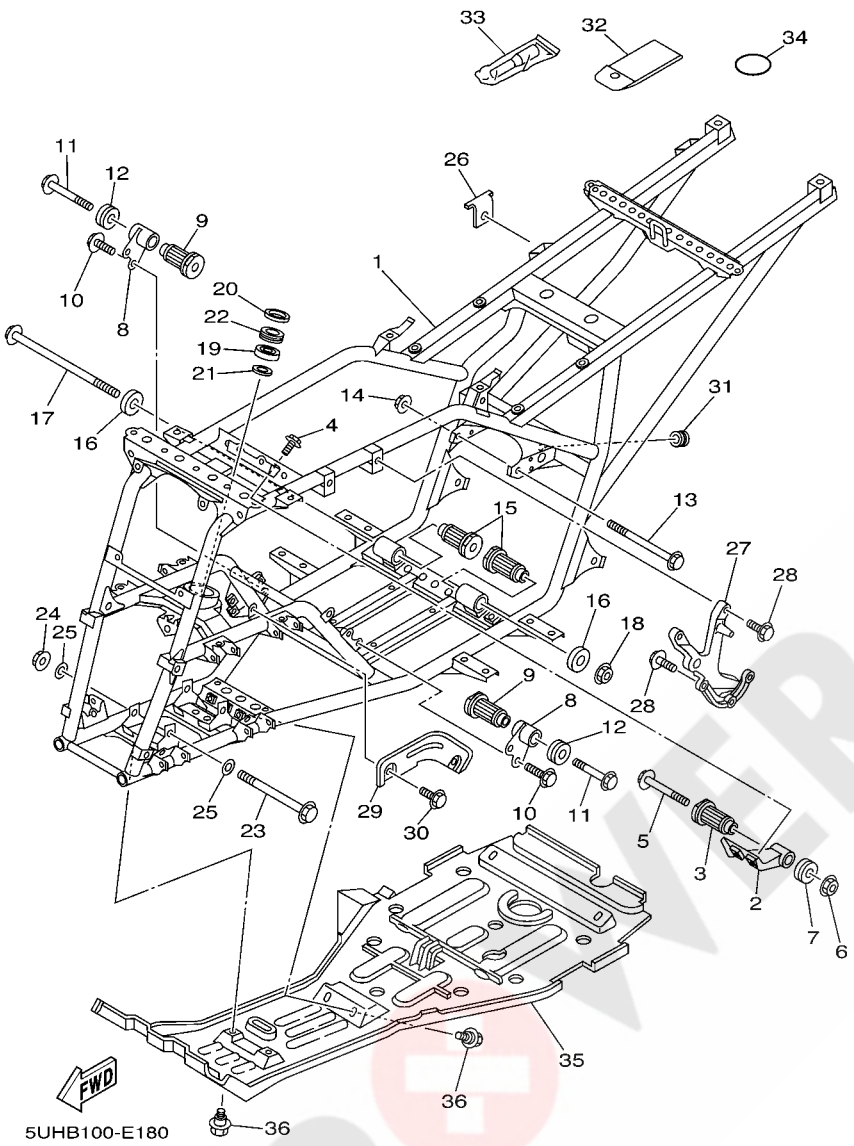

REF. NO.	PART NO.	DESCRIPTION	EUR	OCE				REMARKS
1	5UH–F1110–00	FRAME COMP.	1	1				
2	5UH–F1315–00	STAY, ENGINE 2	1	1				
3	5UH–E5336–00	DAMPER, ENGINE MOUNT 3	1	1				
4	9581P–08012	BOLT, FLANGE	2	2				
5	95817–10110	BOLT, FLANGE	1	1				
6	95607–10200	NUT, U FLANGE	1	1				
7	5ND–F1486–00	DAMPER 2	1	1				
8	5UH–F1316–00	STAY, ENGINE 3	2	2				
9	5UH–E5336–00	DAMPER, ENGINE MOUNT 3	2	2				
10	9581P–08012	BOLT, FLANGE	4	4				
11	95817–10080	BOLT, FLANGE	2	2				
12	5ND–F1486–00	DAMPER 2	2	2				
13	90105–10076	BOLT, FLANGE	1	1				
14	95607–10200	NUT, U FLANGE	1	1				
15	5UH–E5336–00	DAMPER, ENGINE MOUNT 3	2	2				
16	5ND–F1488–00	DAMPER	2	2				
17	90105–10055	BOLT, FLANGE	1	1				
18	95607–10200	NUT, U FLANGE	1	1				
19	93306–203YN	BEARING	1	1				
20	93102–25081	OIL SEAL	1	1				
21	93102–25099	OIL SEAL	1	1				
22	2GU–23872–00	HOLDER, BEARING	1	1				
23	90105–10051	BOLT, FLANGE	2	2				
24	95607–10200	NUT, U FLANGE	2	2				
25	90201–101J1	WASHER, PLATE	4	4				
26	5ND–F1446–00	STAY, MUFFLER 2	1	1				
27	5ND–F1585–01	ARM	1	1				

POWER PARTS By ATVQUAD

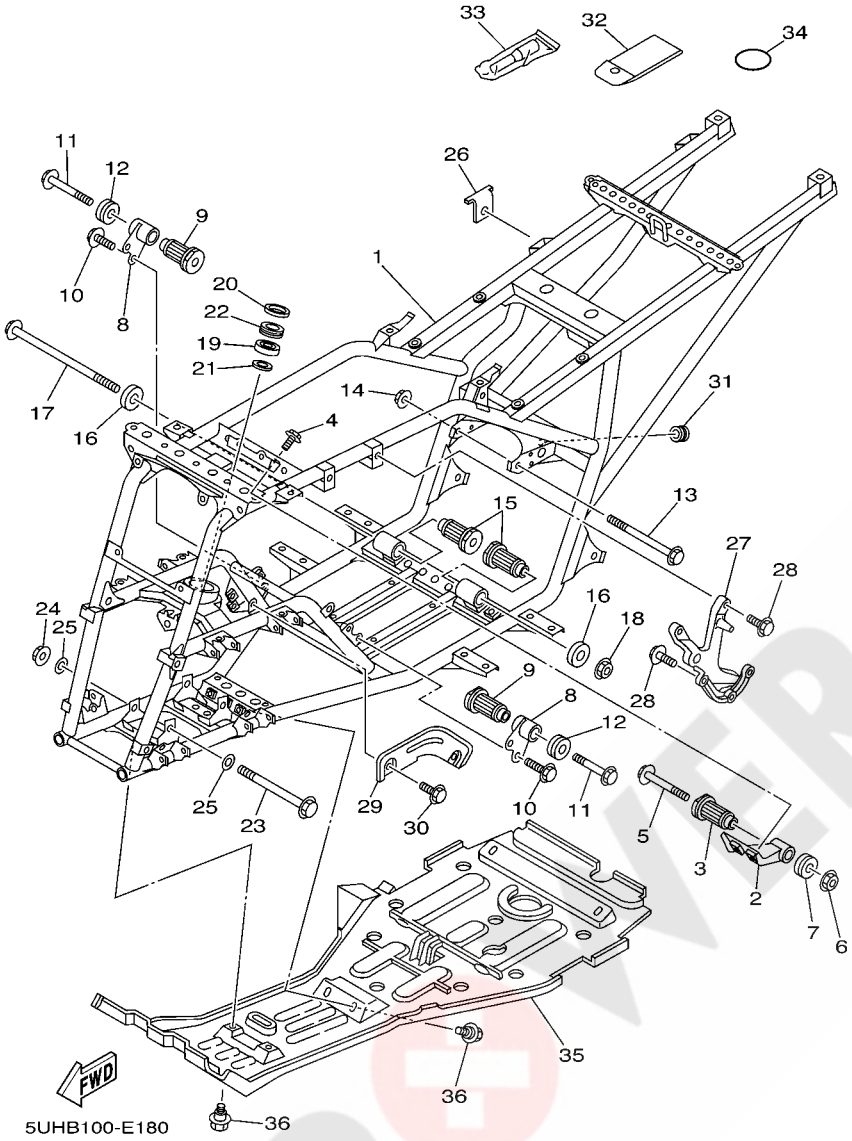

FIG. 18 FRAME

REF. NO.	PART NO.	DESCRIPTION	EUR	OCE				REMARKS
28	95827–08020	BOLT, FLANGE	5	5				
29	5UH–F2825–00	PROTECTOR 1	1	1				
30	95817–06010	BOLT, FLANGE	2	2				
31	90480–10517	GROMMET	1	1				
32	5ND–F8100–00	TOOL KIT	1	1				
33	1NV–2811A–01	GAUGE, AIR	1	1				
34	93210–64297	O-RING	1	1				
35	5ND–F147A–01	GUARD, ENGINE 1	1	1				
36	90109–063F1	BOLT	8	8				

POWER PARTS By 4xQUAD

FIG. 19 FRONT FENDER

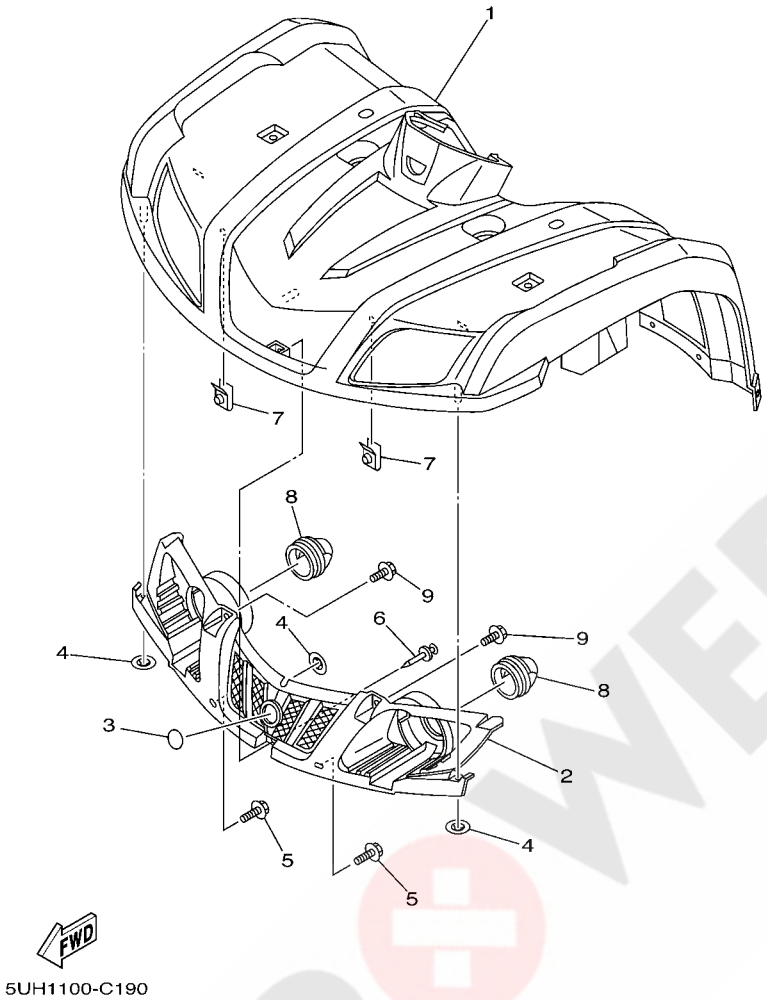

REF. NO.	PART NO.	DESCRIPTION	EUR	OCE				REMARKS
1	5UH–F1500–30	FRONT FENDER ASSY	1					UR FOR RTR
	5UH–F1500–40	FRONT FENDER ASSY	1					UR FOR PDG
	5UH–F1500–50	FRONT FENDER ASSY	1					UR FOR DPBSE
	5UH–F1500–60	FRONT FENDER ASSY		1				FOR DPBSE
2	5UH–F8309–00	GRILLE, FRONT	1	1				
3	5FU–F175B–01	TUNING FORK MARK	1	1				
4	90183–08800	NUT, SPRING	3	3				
5	90119–06060	BOLT, WITH WASHER	2	2				
6	90269–06804	RIVET	1	1				
7	90183–06053	NUT, SPRING	2	2				
8	5UH–F8349–00	CAP	2	2				
9	90119–06060	BOLT, WITH WASHER	2	2				

POWER PARTS By 4QUAD

FIG. 20 REAR FENDER

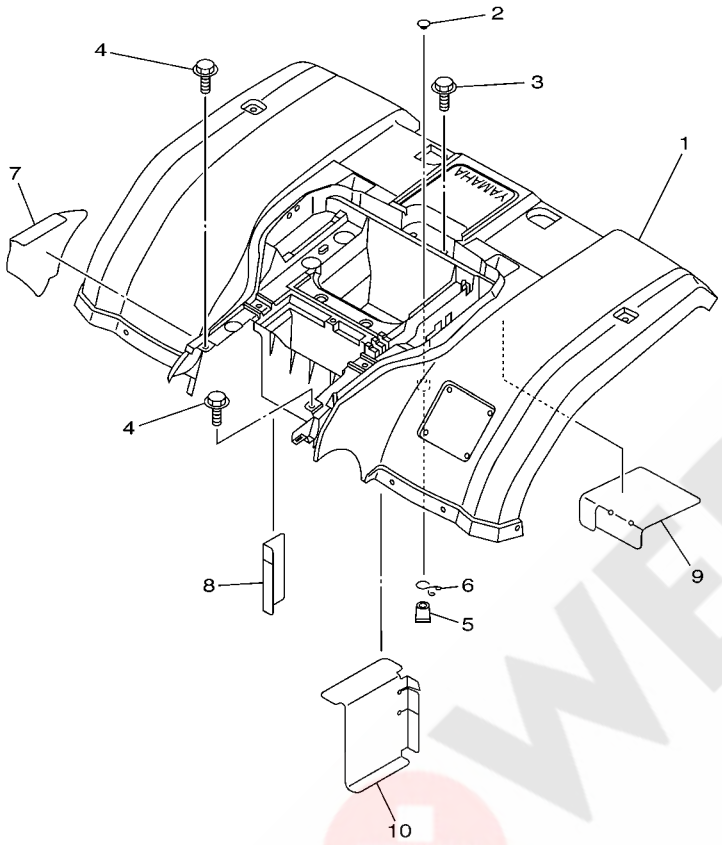

5ND1100-3230

REF. NO.	PART NO.	DESCRIPTION	EUR	OCE				REMARKS
1	5ND–F1600–50	REAR FENDER ASSY.	1					UR FOR RTR
	5ND–F1600–60	REAR FENDER ASSY.	1					UR FOR PDG
	5ND–F1600–70	REAR FENDER ASSY.	1					UR FOR DPBSE
	5ND–F1600–30	REAR FENDER ASSY.		1				FOR DPBSE
2	90338–09801	PLUG	1	1				
3	90119–06060	BOLT, WITH WASHER	3	3				
4	90119–06227	BOLT, WITH WASHER	2	2				
5	5BF–1443E–00	PIPE, DRAIN	1	1				
6	90467–16195	CLIP	1	1				
7	5ND–F163A–00	COVER, REAR FENDER 1	1	1				
8	5ND–F163E–00	COVER, REAR FENDER 2	1	1				
9	5ND–F1652–00	PROTECTOR	1	1				
10	5ND–F163F–00	COVER, REAR FENDER 3	1	1				

POWER PARTS By 4WDUAD

FIG. 21 SIDE COVER

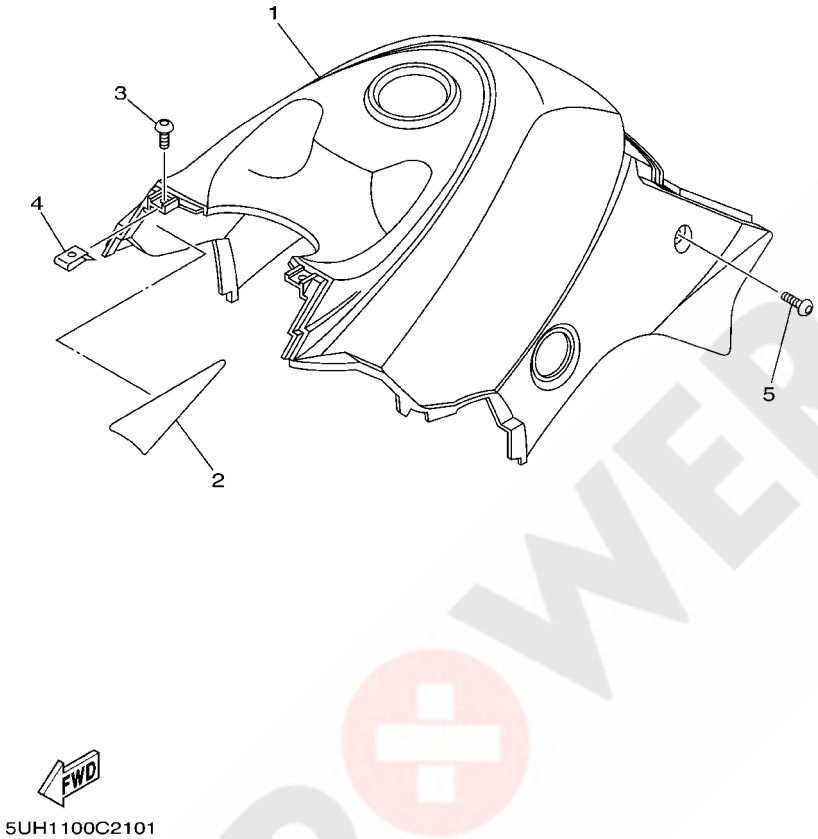

REF. NO.	PART NO.	DESCRIPTION	EUR	OCE				REMARKS
1	5UH–F171A–00	COVER, TOP	1					UR FOR RTR
	5UH–F171A–10	COVER, TOP	1					UR FOR PDG
	5UH–F171A–30	COVER, TOP	1	1				UR FOR DPBSE
2	5ND–F174M–00	CLOTH, PROTECTOR	1	1				
3	90149–05299	SCREW	2	2				
4	90183–05024	NUT, SPRING	2	2				
5	90110–06007	BOLT, HEXAGON SOCKET HEAD	2	2				

POWER PARTS By 4SQUAD

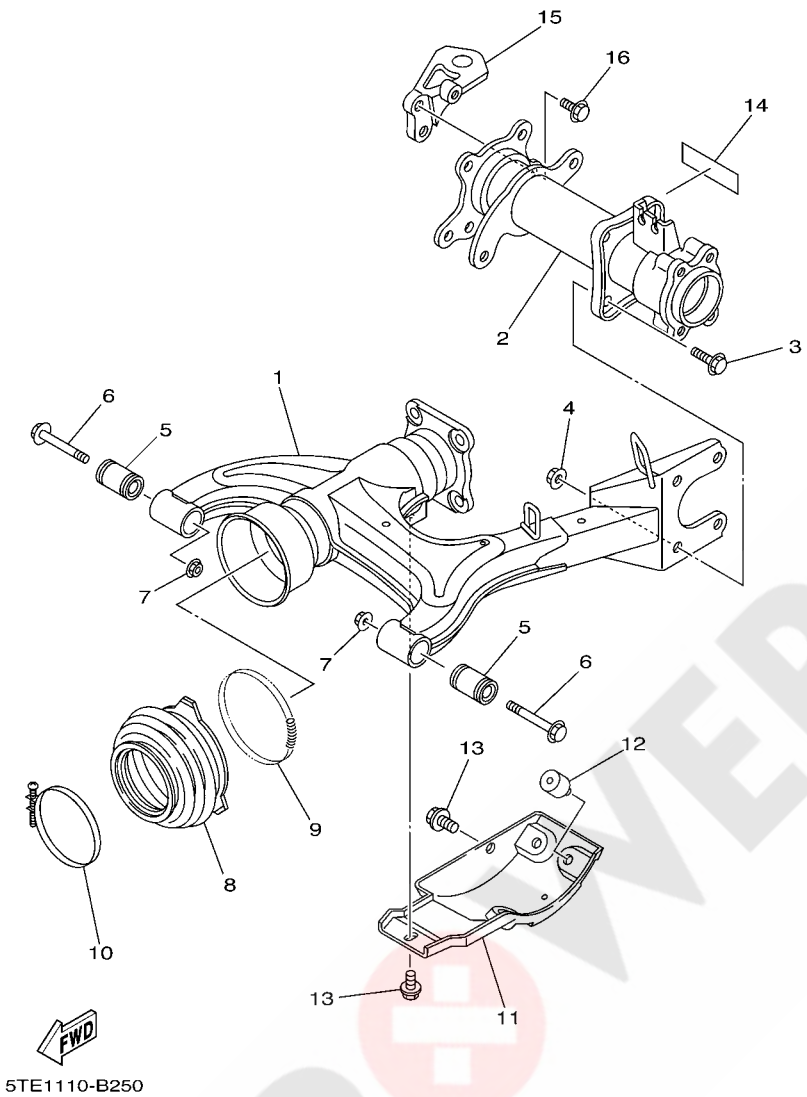

FIG. 22 REAR ARM

REF. NO.	PART NO.	DESCRIPTION	EUR	OCE				REMARKS
1	5ND–F2110–10	REAR ARM COMP.	1	1				
2	5TE–G6540–11	REAR AXLE HOUSING COMP.	1	1				
3	9581P–10020	BOLT, FLANGE	4	4				
4	95707–10500	NUT, FLANGE	4	4				
5	5ND–F2123–00	BUSH 1	2	2				
6	90105–12660	BOLT, FLANGE	2	2				
7	95607–12200	NUT, SELF-LOCKING	2	2				
8	5ND–F2189–00	BOOT, RUBBER	1	1				
9	90506–07135	SPRING, TENSION	1	1				
10	90460–85277	CLAMP, HOSE	1	1				
11	4XE–F219X–00	COVER	1	1				
12	109–27114–00	STOPPER, MAIN STAND	3	3				
13	95807–08012	BOLT, FLANGE	2	2				
14	5ND–F151K–00	LABEL 7	1	1				ENGLISH
15	5ND–F8488–20	HOOK	1					
	5ND–F8488–30	HOOK		1				
16	9581P–10020	BOLT, FLANGE	3	3				

POWER PARTS By ATQUAD

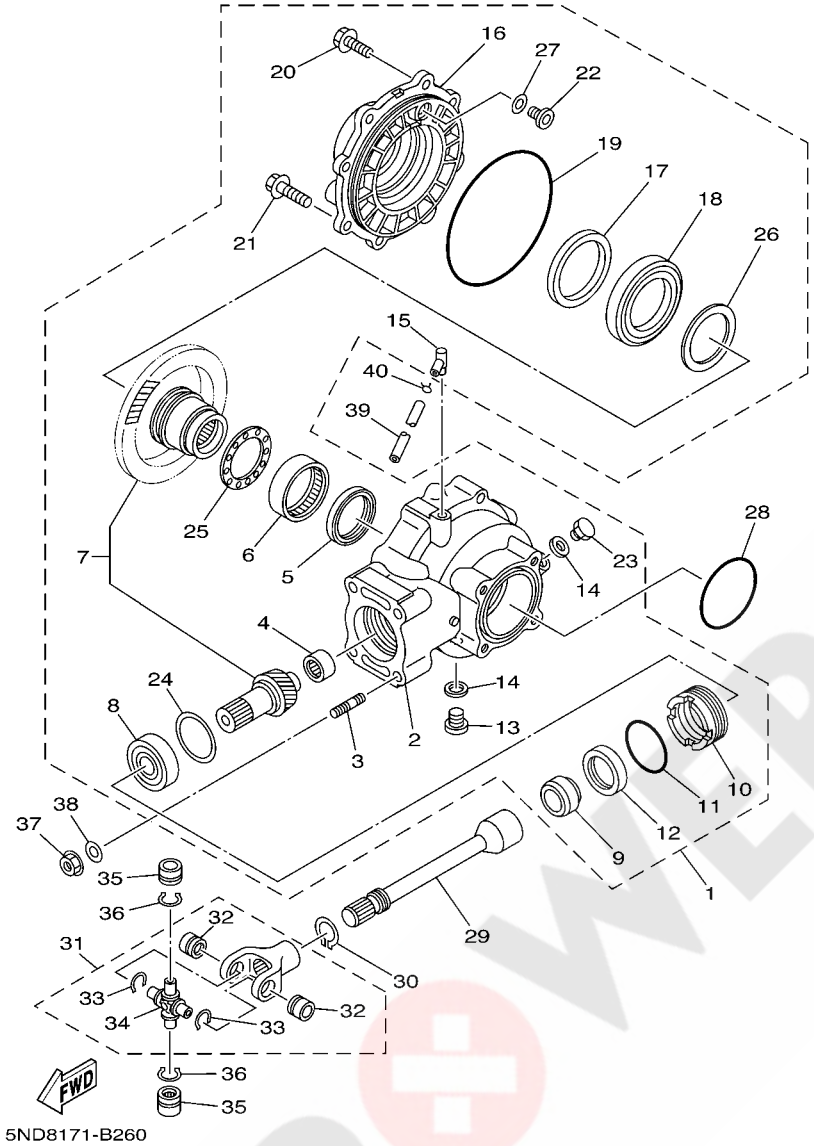

FIG. 23 DRIVE SHAFT

REF. NO.	PART NO.	DESCRIPTION	EUR	OCE				REMARKS
1	5ND–G6101–02	REAR AXLE GEAR CASE ASSY	1	1				
2	5ND–G6151–01	.HOUSING, DRIVE SHAFT	1	1				
3	90116–10840	.BOLT, STUD	4	4				
4	4XE–G6102–00	.BEARING ASSY	1	1				
5	93101–52116	.OIL SEAL	1	1				
6	93317–855Y9	.BEARING	1	1				
7	5GT–Y4612–00	.RING GEAR SET	1	1				
8	93306–305Y6	.BEARING	1	1				
9	90387–255H9	.COLLAR	1	1				
10	29U–46125–00	.RETAINER, BEARING	1	1				
11	93210–59531	.O-RING	1	1				
12	93101–38098	.OIL SEAL	1	1				
13	90340–14046	.PLUG, STRAIGHT SCREW	1	1				
14	214–11198–01	.GASKET	2	2				
15	2N4–15371–00	.BREATHER	1	1				
16	5ND–G6152–00	.HOUSING, BEARING	1	1				
17	93102–65386	.OIL SEAL	1	1				
18	93316–013Y0	.BEARING	1	1				
19	93211–51749	.O-RING	1	1				
20	9752P–08525	.BOLT, WITH WASHER	6	6				
21	95817–10025	.BOLT, FLANGE	2	2				
22	5FU–G6156–00	.STOPPER, RING GEAR	1	1				
23	90340–14029	.PLUG, STRAIGHT SCREW	1	1				
24	4XE–E7537–15	.SHIM, THRUST(T=0.15MM)	1	1				UR
	4XE–E7537–30	.SHIM, THRUST(T=0.30MM)	1	1				UR
	4XE–E7537–40	.SHIM, THRUST(T=0.40MM)	1	1				UR
	4XE–E7537–45	.SHIM, THRUST(T=0.45MM)	1	1				UR

POWER PARTS By 4QUAD

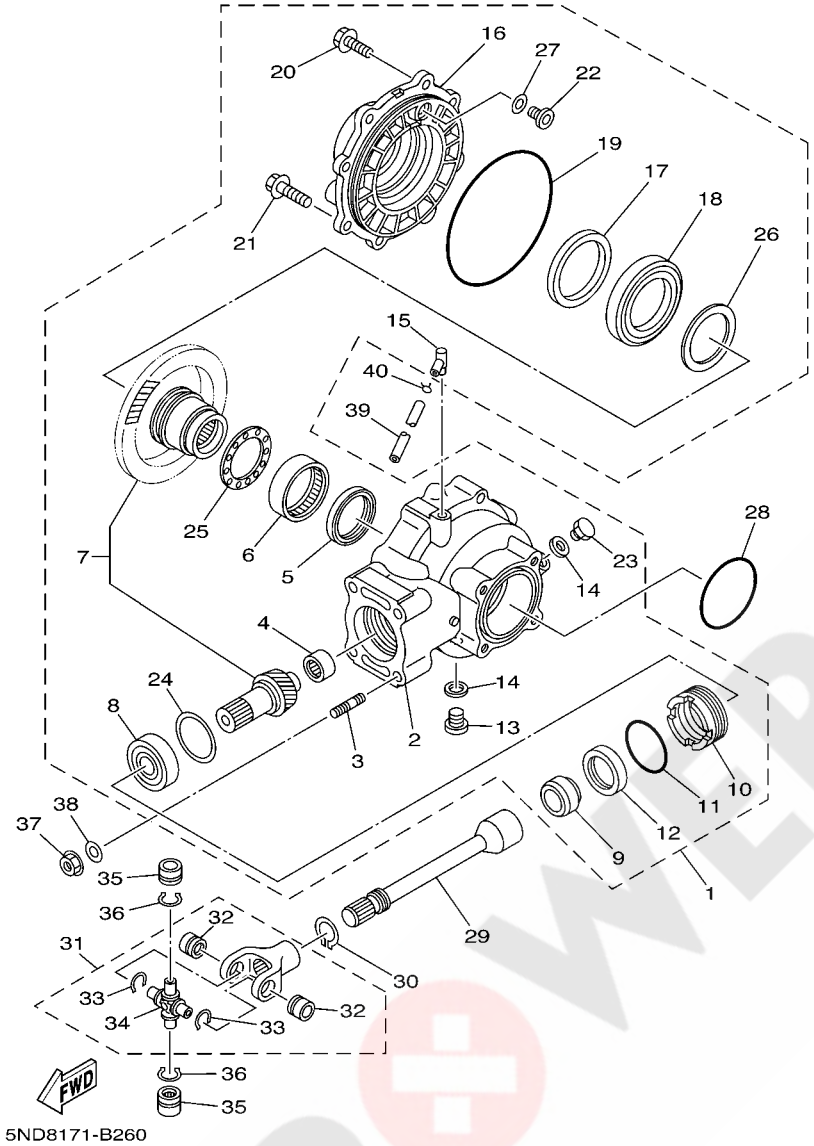

FIG. 23 DRIVE SHAFT

REF. NO.	PART NO.	DESCRIPTION	EUR	OCE				REMARKS
24	4XE–E7537–50	.SHIM, THRUST(T=0.50MM)	1	1				UR
	4XE–E7537–60	.SHIM, THRUST(T=0.60MM)	1	1				UR
25	4XE–G6118–10	.SHIM, THRUST(T=1.0MM)	1	1				UR
	4XE–G6118–11	.SHIM, THRUST(T=1.1MM)	1	1				UR
	4XE–G6118–12	.SHIM, THRUST(T=1.2MM)	1	1				UR
	4XE–G6118–13	.SHIM, THRUST(T=1.3MM)	1	1				UR
	4XE–G6118–14	.SHIM, THRUST(T=1.4MM)	1	1				UR
	4XE–G6118–15	.SHIM, THRUST(T=1.5MM)	1	1				UR
	4XE–G6118–16	.SHIM, THRUST(T=1.6MM)	1	1				UR
	4XE–G6118–17	.SHIM, THRUST(T=1.7MM)	1	1				UR
	4XE–G6118–18	.SHIM, THRUST(T=1.8MM)	1	1				UR
	4XE–G6118–19	.SHIM, THRUST(T=1.9MM)	1	1				UR
	4XE–G6118–20	.SHIM, THRUST(T=2.0MM)	1	1				UR
	4XE–G6118–21	.SHIM, THRUST(T=2.1MM)	1	1				UR
26	4XE–G6117–25	.SHIM, RING GEAR(T=0.25MM)	1	1				UR
	4XE–G6117–30	.SHIM, RING GEAR(T=0.30MM)	1	1				UR
	4XE–G6117–35	.SHIM, RING GEAR(T=0.35MM)	1	1				UR
	4XE–G6117–40	.SHIM, RING GEAR(T=0.40MM)	1	1				UR
	4XE–G6117–45	.SHIM, RING GEAR(T=0.45MM)	1	1				UR
	4XE–G6117–50	.SHIM, RING GEAR(T=0.50MM)	1	1				UR
27	5FU–G6157–10	.SHIM, RING GEAR(T=0.10MM)	1	1				UR
	5FU–G6157–15	.SHIM, RING GEAR(T=0.15MM)	1	1				UR
	5FU–G6157–20	.SHIM, RING GEAR(T=0.20MM)	1	1				UR
	5FU–G6157–30	.SHIM, RING GEAR(T=0.30MM)	1	1				UR
	5FU–G6157–40	.SHIM, RING GEAR(T=0.40MM)	1	1				UR
	5FU–G6157–50	.SHIM, RING GEAR(T=0.50MM)	1	1				UR
28	93210–76800	O-RING	1	1				

POWER PARTS BY SQUAD

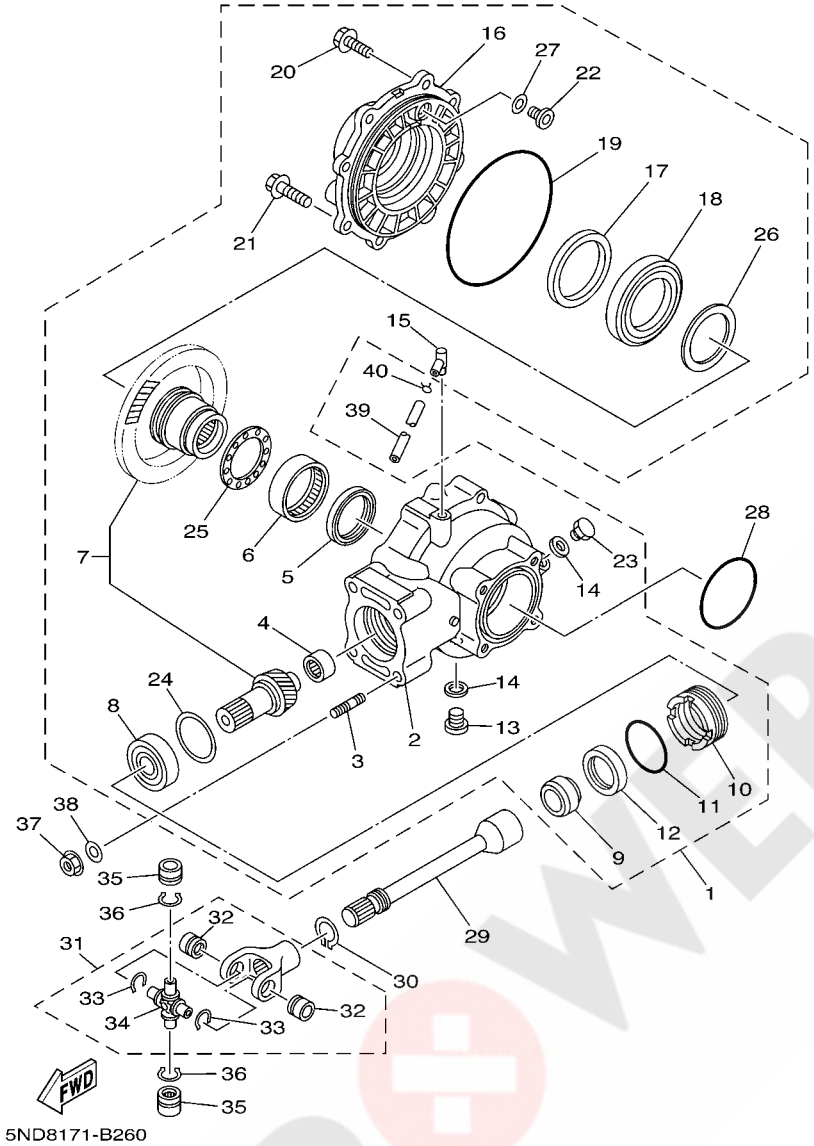

FIG. 23 DRIVE SHAFT

REF. NO.	PART NO.	DESCRIPTION	EUR	OCE				REMARKS
29	5ND–G6172–10	SHAFT, DRIVE	1	1				
30	93410–22039	CIRCLIP	1	1				
31	3HN–46108–01	CROSS JOINT COMP. 3	1	1				
32	93399–99926	.BEARING	2	2				
33	93440–20088	.CIRCLIP	2	2				
34	2HR–46187–00	.SPIDER	1	1				
35	93399–99926	BEARING	2	2				
36	93440–20088	CIRCLIP	2	2				
37	95707–10500	NUT, FLANGE	4	4				
38	90201–108P8	WASHER, PLATE	4	4				
39	90445–07810	HOSE (L1050)	1	1				
40	90467–07029	CLIP	1	1				

POWER PARTS By axQUAD

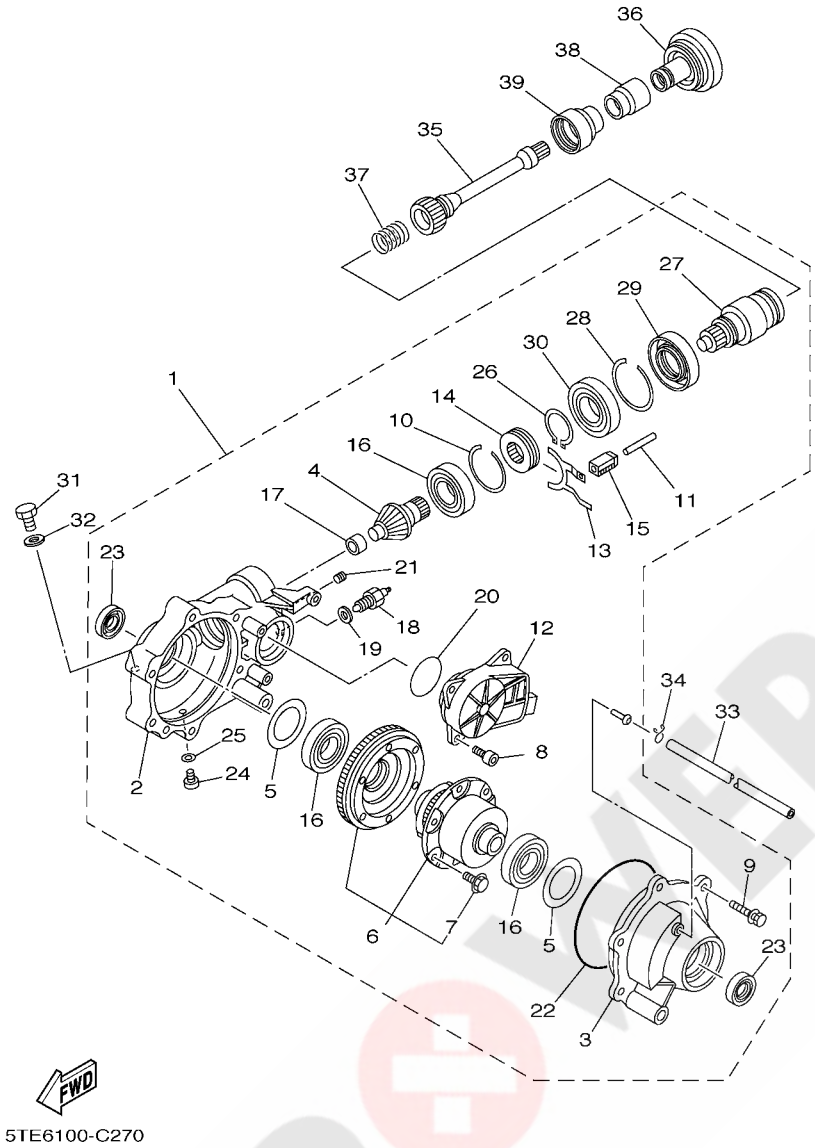

FIG. 24 FRONT DIFFERENTIAL

REF. NO.	PART NO.	DESCRIPTION	EUR	OCE				REMARKS
1	5GH–46160–04	FRONT AXLE GEAR CASE COMP.	1	1				
2	5GH–46161–01	.HOUSING, SHAFT DRIVE 2	1	1				
3	5GH–46162–01	.HOUSING, BEARING 2	1	1				
4	5GH–46141–01	.PINION, DRIVE 2	1	1				
5	4WV–46119–01	.SHIM, THRUST (0.1T)	1	1				UR
	4WV–46119–11	.SHIM, THRUST (0.2T)	1	1				UR
	4WV–46119–21	.SHIM, THRUST (0.3T)	1	1				UR
	4WV–46119–31	.SHIM, THRUST (0.4T)	1	1				UR
	4WV–46119–41	.SHIM, THRUST (0.5T)	1	1				UR
	4WV–46119–51	.SHIM, THRUST (1.0T)	1	1				UR
6	5GH–46470–03	.LIMITED SLIP DIFF. ASSY	1	1				
7	4WV–46155–00	..BOLT 1	6	6				
8	91317–08020	.BOLT	3	3				
9	4WV–46159–00	.BOLT 3	6	6				
10	4WV–46143–00	.RING,HOLE SNAP 2	1	1				
11	5GH–18318–00	.SHAFT, SHIFTER	1	1				
12	5GH–4616A–02	.SERVO MOTOR COMP	1	1				
13	5GH–18514–01	.FORK, SHIFT 4	1	1				
14	4WV–46441–00	.CLUTCH,DRIVEN	1	1				
15	5GH–18319–00	.SHAFT 2	1	1				
16	4WV–46165–00	.BEARING 2	3	3				
17	4WV–46167–00	.BEARING 4	1	1				
18	3GD–82540–11	.NEUTRAL SWITCH ASSY	1	1				
19	4WV–46132–00	.GASKET 1	1	1				
20	93210–50768	.O-RING	1	1				
21	90113–08004	.BOLT, SET	1	1				
22	93211–40040	.O-RING	1	1				

POWER PARTS By SQUAD

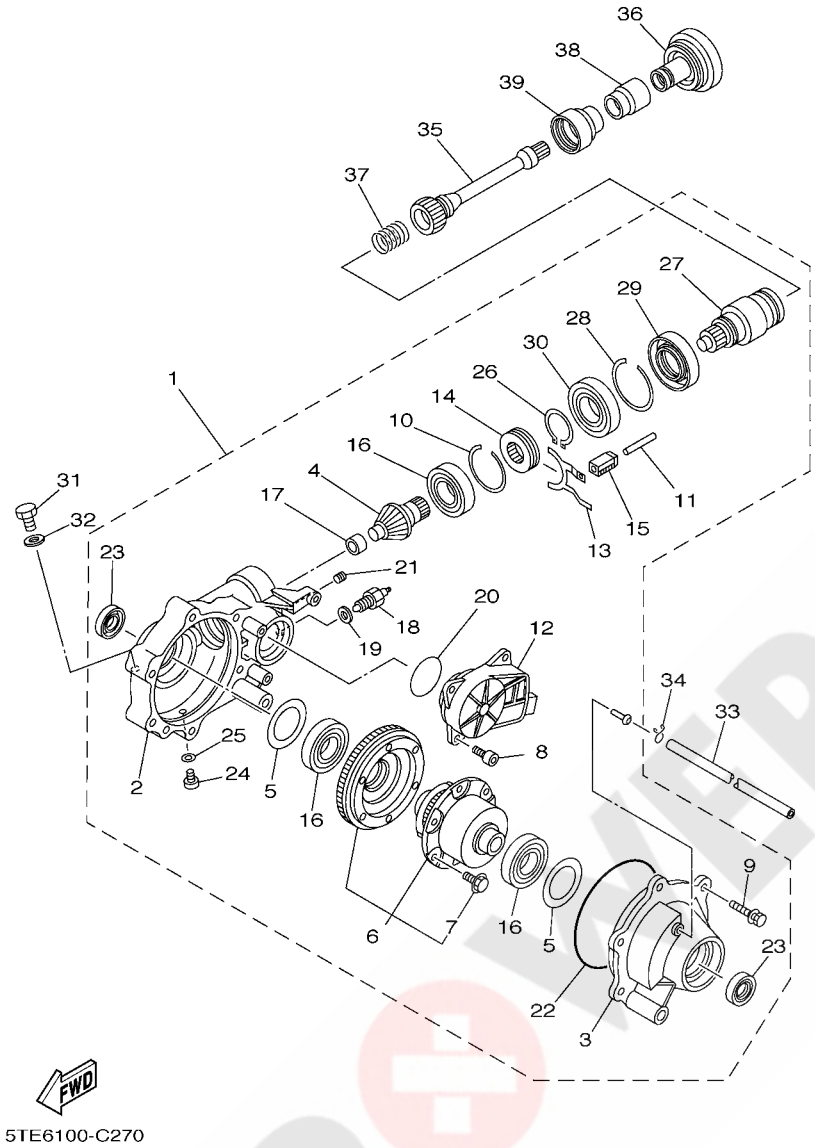

FIG. 24 FRONT DIFFERENTIAL

REF. NO.	PART NO.	DESCRIPTION	EUR	OCE				REMARKS
23	93102–24034	.OIL SEAL	2	2				
24	90340–10001	.PLUG, STRAIGHT SCREW	1	1				
25	90430–10003	.GASKET	1	1				
26	93450–44141	.CIRCLIP	1	1				
27	5GH–46126–01	.COUPLING	1	1				
28	93450–71142	.CIRCLIP	1	1				
29	93102–50030	.OIL SEAL	1	1				
30	93316–00801	.BEARING	1	1				
31	90340–14029	PLUG, STRAIGHT SCREW	1	1				
32	214–11198–01	GASKET	1	1				
33	90445–07809	HOSE (L750)	1	1				
34	90467–07029	CLIP	1	1				
35	5TE–G6173–10	SHAFT, DRIVE 2	1	1				
36	5GH–46123–00	COUPLING, GEAR	1	1				
37	90501–296L7	SPRING, COMPRESSION	1	1				
38	5GH–46136–00	SEAL 1	1	1				
39	5KM–46137–00	SEAL 2	1	1				

POWER PARTS By 4xQUAD

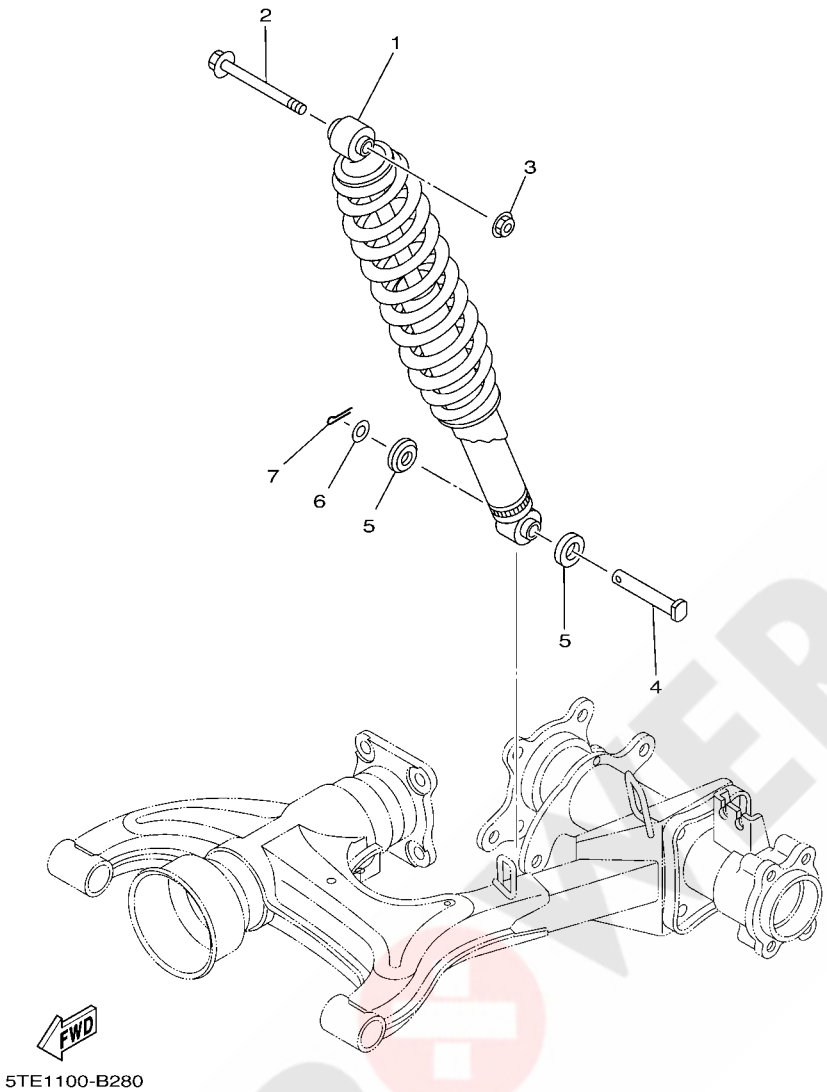

FIG. 25 REAR SUSPENSION

REF. NO.	PART NO.	DESCRIPTION	EUR	OCE				REMARKS
1	5UH–F2210–01	SHOCK ABSORBER ASSY, REAR	1	1				
2	90105–12889	BOLT, FLANGE	1	1				
3	90185–12072	NUT, SELF-LOCKING	1	1				
4	90240–12092	PIN, CLEVIS	1	1				
5	1W1–22128–00	COVER, THRUST 1	2	2				
6	90201–127J6	WASHER, PLATE	1	1				
7	91401–30025	PIN, SPLIT	1	1				

POWER PARTS By 4xQUAD

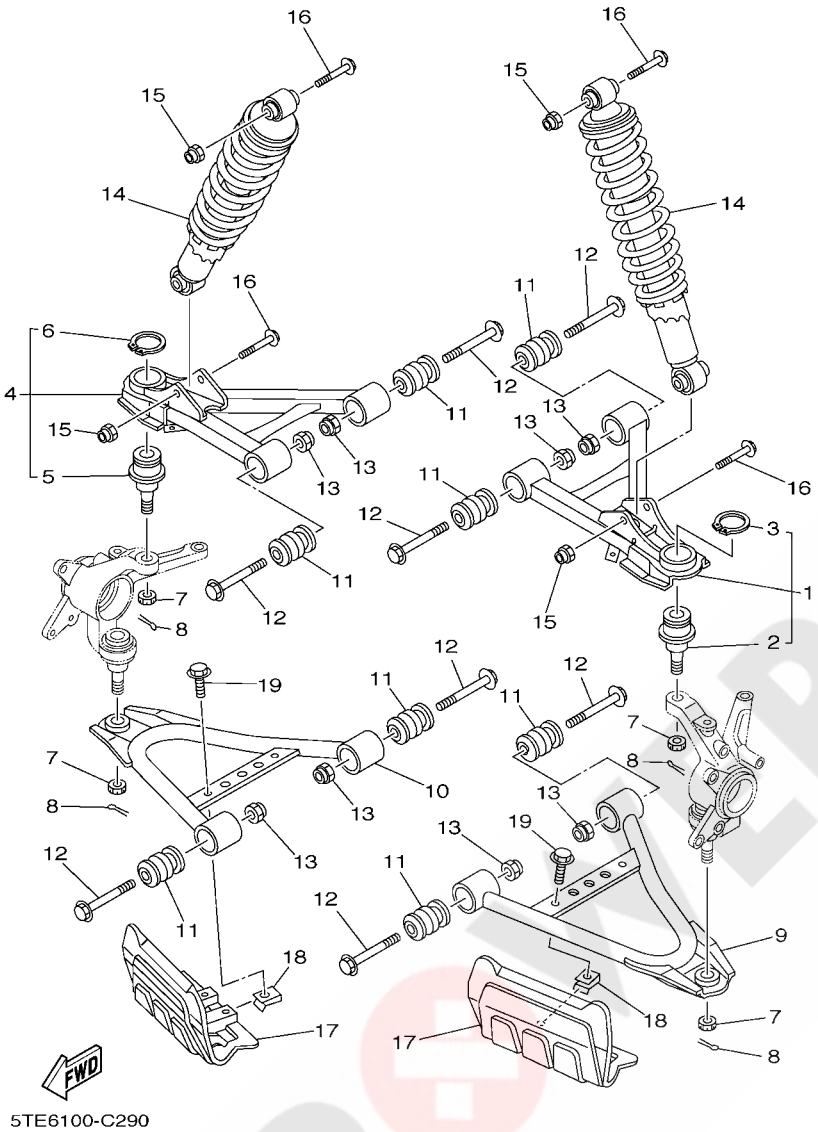

FIG. 26 FRONT SUSPENSION & WHEEL

REF. NO.	PART NO.	DESCRIPTION	EUR	OCE				REMARKS
1	5ND–F3540–11	FRONT UPPER ARM COMP. (LEFT)	1	1				
2	5FU–F3549–00	.BALL JOINT 1	1	1				
3	93410–32826	.CIRCLIP	1	1				
4	5ND–F3550–11	FRONT UPPER ARM COMP. (RIGHT)	1	1				
5	5FU–F3549–00	.BALL JOINT 1	1	1				
6	93410–32826	.CIRCLIP	1	1				
7	90171–12816	NUT, CASTLE	4	4				
8	91401–25020	PIN, COTTER	4	4				
9	5ND–F357A–01	ARM,FR. LWR. LH.	1	1				
10	5ND–F358A–01	ARM,FR. LWR. RH.	1	1				
11	2HR–23526–00	BUSH	8	8				
12	90105–10890	BOLT, FLANGE	8	8				
13	90185–10844	NUT, SELF-LOCKING	8	8				
14	5UH–F3350–01	SHOCK ABSORBER ASSY	2	2				
15	90185–10844	NUT, SELF-LOCKING	4	4				
16	90105–108B1	BOLT, FLANGE	4	4				
17	5ND–F3123–00	COVER, LOWER 1	2	2				
18	90183–06053	NUT, SPRING	2	2				
19	95807–06012	BOLT, FLANGE	2	2				

POWER PARTS By axquad

FIG. 27 STEERING

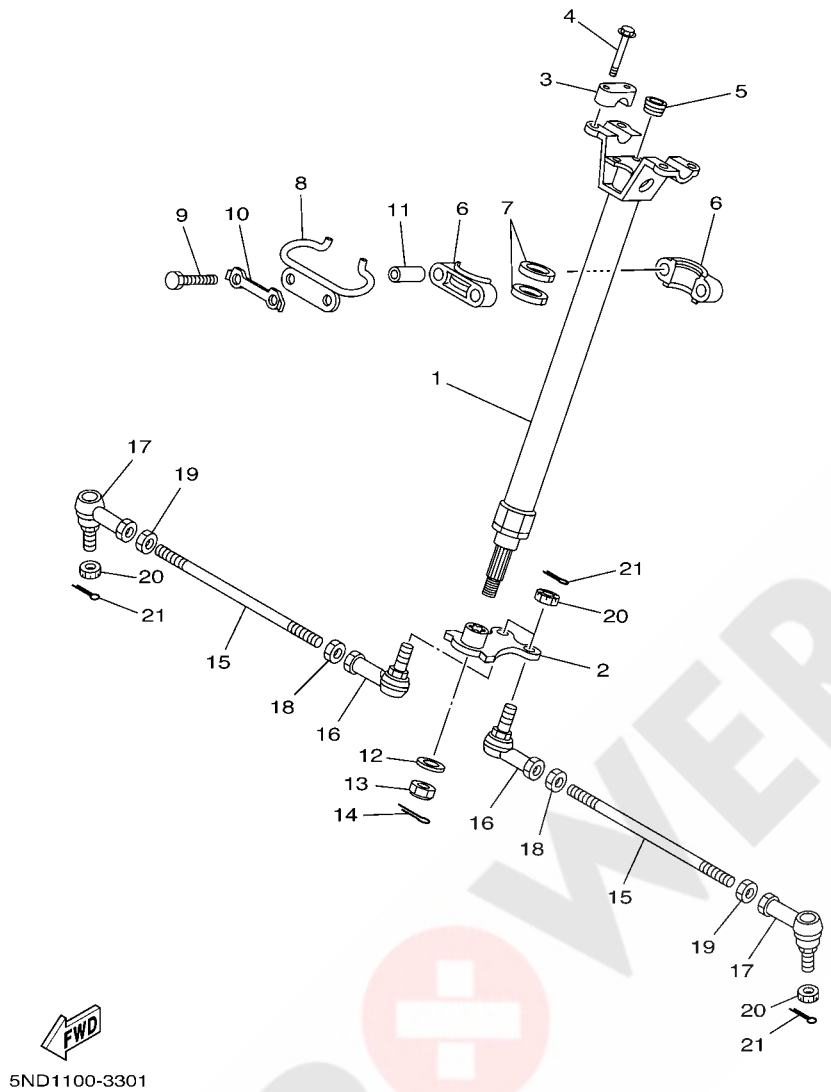

REF. NO.	PART NO.	DESCRIPTION	EUR	OCE				REMARKS
1	5ND–F3813–10	COLUMN, STEERING 2	1	1				
2	5ND–F3816–11	ARM, PITMAN	1	1				
3	8K1–23814–00	HOLDER, HANDLE	2	2				
4	9581P–08030	BOLT, FLANGE	4	4				
5	90336–28053	PLUG, TAPER	1	1				
6	1UY–23812–00	PLANE BEARING, STEERING	2	2				
7	93112–31011	OIL SEAL	2	2				
8	5ND–F3868–00	BRACKET, STEERING LOWER	1	1				
9	9702P–08060	BOLT	2	2				
10	4XE–F3894–00	WASHER, LOCK 1	1	1				
11	90387–090R0	COLLAR	2	2				
12	90201–14226	WASHER, PLATE	1	1				
13	90185–14070	NUT, SELF-LOCKING	1	1				
14	91401–20025	PIN, COTTER	1	1				
15	5ND–F3831–00	ROD, TIE	2	2				
16	1D9–F3841–00	JOINT, UNIVERSAL 1	2	2				
17	5ND–F3845–00	JOINT, UNIVERSAL 2	2	2				
18	4XE–F3833–00	NUT 1	2	2				
19	4XE–F3834–00	NUT 2	2	2				
20	90171–12816	NUT, CASTLE	4	4				
21	91401–25020	PIN, COTTER	4	4				

POWER PARTS By 4xQUAD

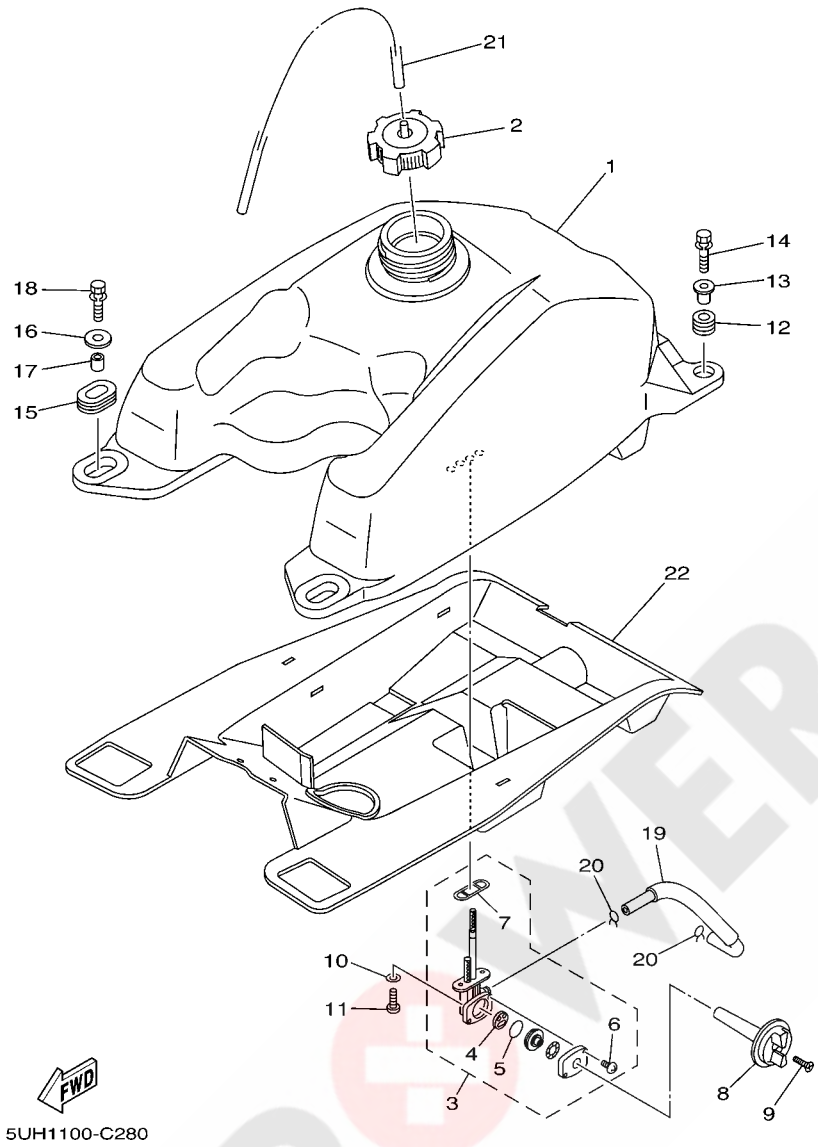

FIG. 28 FUEL TANK

REF. NO.	PART NO.	DESCRIPTION	EUR	OCE				REMARKS
1	5UH–F4110–00	FUEL TANK COMP.	1	1				
2	5KM–24610–00	CAP ASSY	1	1				
3	5KM–24500–01	FUEL COCK ASSY 1	1	1				
4	3AC–24523–00	.VALVE PACKING	1	1				
5	3AJ–24534–01	.SEAL, COCK	1	1				
6	98507–03014	.SCREW, PAN HEAD	2	2				
7	4X8–24512–00	.O-RING	1	1				
8	5GH–24524–00	LEVER, COCK	1	1				
9	98707–04018	SCREW, FLAT HEAD	1	1				
10	90202–05193	WASHER, PLATE	2	2				
11	90149–06011	SCREW	2	2				
12	90480–18290	GROMMET	2	2				
13	90387–066J1	COLLAR	2	2				
14	90119–06831	BOLT, WITH WASHER	2	2				
15	90480–01400	GROMMET	2	2				
16	90201–060L5	WASHER, PLATE	2	2				
17	90387–07598	COLLAR	2	2				
18	90119–06831	BOLT, WITH WASHER	2	2				
19	5UH–F4311–00	PIPE, FUEL 1	1	1				
20	90467–10008	CLIP	2	2				
21	90445–088C5	HOSE (L400)	1	1				
22	5UH–F414H–00	DAMPER, PLATE 1	1	1				

POWER PARTS By 4xQUAD

FIG. 29 SEAT

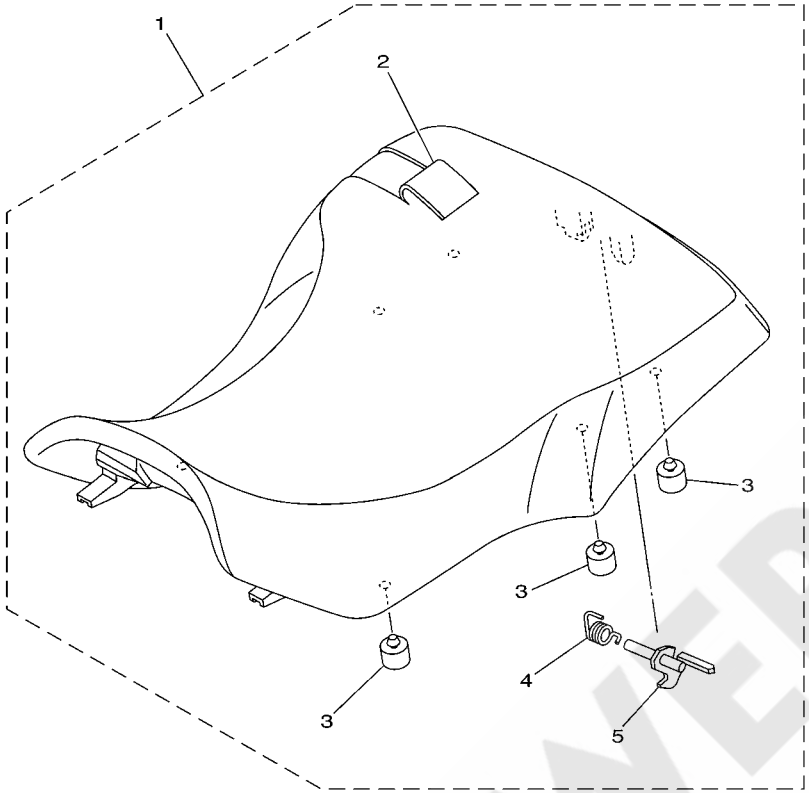

5ND1100-3320

REF. NO.	PART NO.	DESCRIPTION	EUR	OCE				REMARKS
1	5UH–F4710–20	SINGLE SEAT ASSY	1					
	5UH–F4710–00	SINGLE SEAT ASSY		1				
2	5UH–F470F–20	.SEAT COVER COMP.	1					
	5UH–F470F–00	.SEAT COVER COMP.		1				
3	5UH–F4747–00	.DAMPER, SEAT	6	6				
4	5UH–F478V–00	.SPRING, TORSION	1	1				
5	5UH–F4776–00	.LEVER, SEAT	1	1				

POWER PARTS By 4QUAD

FIG. 30 FRONT WHEEL

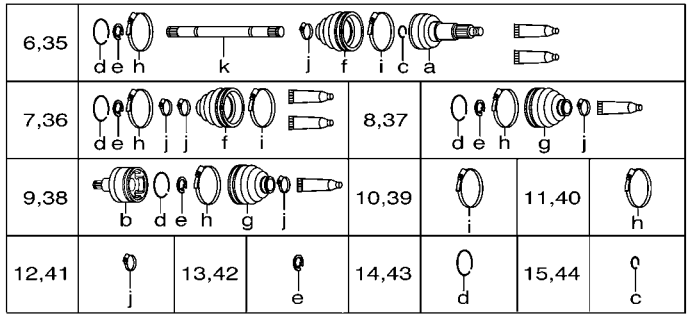

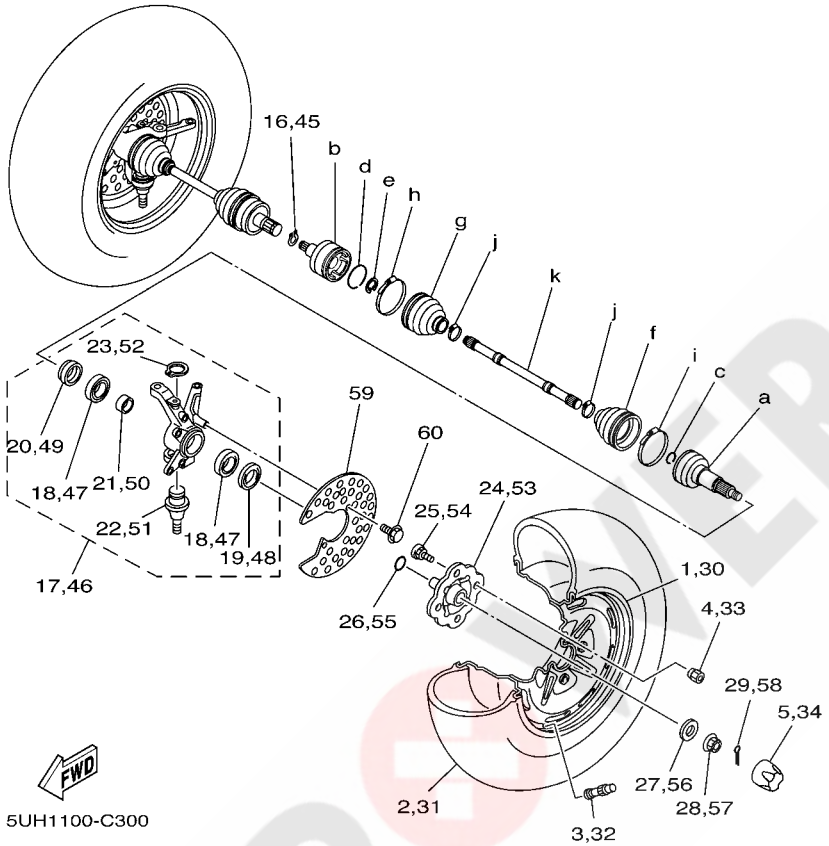

REF. NO.	PART NO.	DESCRIPTION	EUR	OCE				REMARKS
1	5ND–F5180–01	WHEEL COMP.	1	1				
2	94108–12802	TIRE (AT25X8-12 M911Y)	1					CHENG SHIN
	94108–12803	TIRE (AT25X8-12 C828)		1				CHENG SHIN
3	93900–00813	VALVE, RIM (TR413)	1	1				
4	90179–10540	NUT	4	4				
5	5GT–2512A–00	CAP, WHEEL	1	1				
6	5UH–2510F–00	BALL JOINT SET	1	1				
7	5UH–2510G–00	BOOT SET (BALL JOINT)	1	1				
8	5UH–2510H–00	BOOT SET (DOUBLE OFFSET JOINT)	1	1				
9	5UH–2510J–00	DOUBLE OFF SET JOINT	1	1				
10	3HN–2511G–01	BOOT BAND (BALL JOINT)	1	1				
11	3HN–2511H–01	BOOT BAND(DOUBLE OFFSET JOINT)	1	1				
12	3HN–2512G–01	BOOT BAND (SMALL)	2	2				
13	2HR–2512J–00	SNAP RING	1	1				
14	4KB–2512H–00	CIRCLIP	1	1				
15	2HR–2512H–00	CIRCLIP	1	1				
16	93450–22119	CIRCLIP	1	1				
17	5ND–F3501–10	STEERING KNUCKLE ASSY (LEFT)	1	1				
18	93306–006Y2	.BEARING	2	2				
19	93106–38046	.OIL SEAL	1	1				
20	93106–38047	.OIL SEAL	1	1				
21	90560–30325	.SPACER	1	1				
22	5FU–F3549–00	.BALL JOINT 1	1	1				
23	93410–32826	.CIRCLIP	1	1				
24	5ND–F5111–20	HUB, FRONT	1	1				
25	90114–10010	BOLT, SERRATION	4	4				
26	93210–27666	O-RING	1	1				

POWER PARTS By ATV&QUAD

FIG. 30 FRONT WHEEL

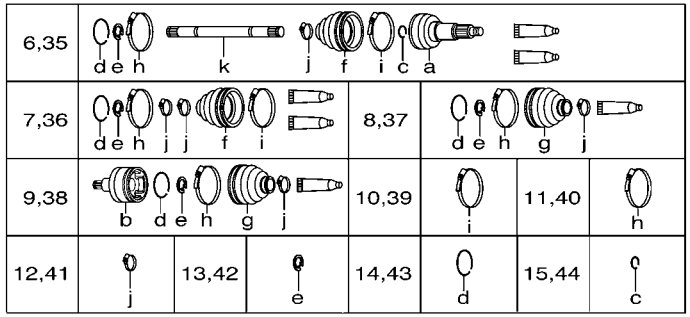

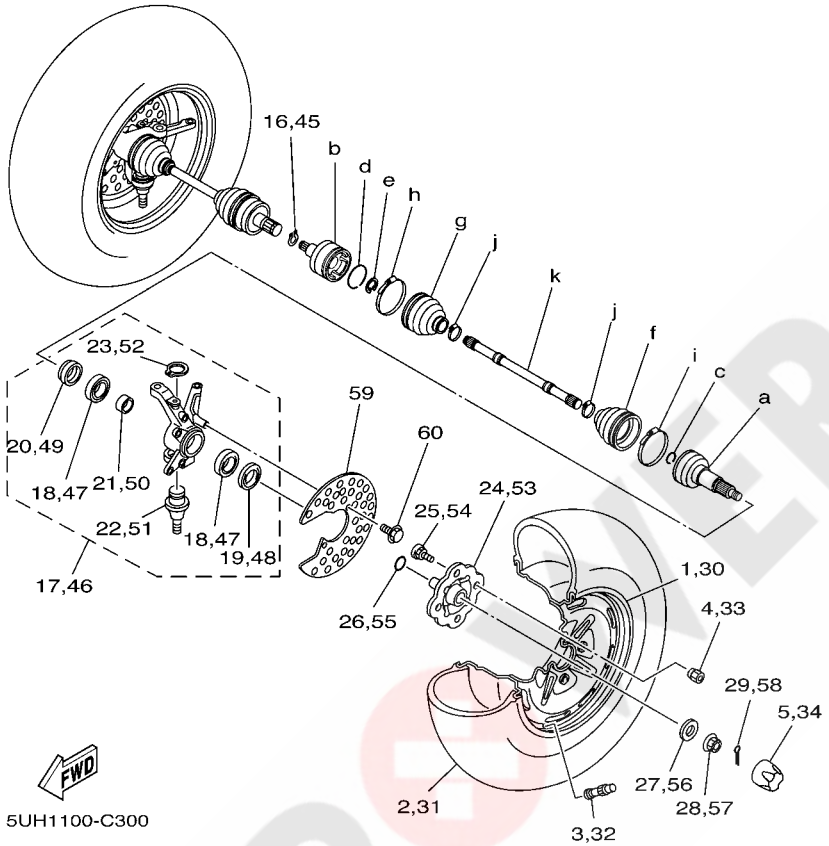

REF. NO.	PART NO.	DESCRIPTION	EUR	OCE				REMARKS
27	90201–168R1	WASHER, PLATE	1	1				
28	90171–16001	NUT, CASTLE	1	1				
29	91401–30030	PIN, COTTER	1	1				
30	5ND–F5180–01	WHEEL COMP.	1	1				
31	94108–12802	TIRE (AT25X8-12 M911Y)	1					CHENG SHIN
	94108–12803	TIRE (AT25X8-12 C828)		1				CHENG SHIN
32	93900–00813	VALVE, RIM (TR413)	1	1				
33	90179–10540	NUT	4	4				
34	5GT–2512A–00	CAP, WHEEL	1	1				
35	5UH–2510F–00	BALL JOINT SET	1	1				
36	5UH–2510G–00	BOOT SET (BALL JOINT)	1	1				
37	5UH–2510H–00	BOOT SET (DOUBLE OFFSET JOINT)	1	1				
38	5UH–2510J–00	DOUBLE OFF SET JOINT	1	1				
39	3HN–2511G–01	BOOT BAND (BALL JOINT)	1	1				
40	3HN–2511H–01	BOOT BAND(DOUBLE OFFSET JOINT)	1	1				
41	3HN–2512G–01	BOOT BAND (SMALL)	2	2				
42	2HR–2512J–00	SNAP RING	1	1				
43	4KB–2512H–00	CIRCLIP	1	1				
44	2HR–2512H–00	CIRCLIP	1	1				
45	93450–22119	CIRCLIP	1	1				
46	5ND–F3502–10	STEERING KNUCKLE ASSY (RIGHT)	1	1				
47	93306–006Y2	.BEARING	2	2				
48	93106–38046	.OIL SEAL	1	1				
49	93106–38047	.OIL SEAL	1	1				
50	90560–30325	.SPACER	1	1				
51	5FU–F3549–00	.BALL JOINT 1	1	1				
52	93410–32826	.CIRCLIP	1	1				

POWER PARTS By 4WQUAD

FIG. 30 FRONT WHEEL

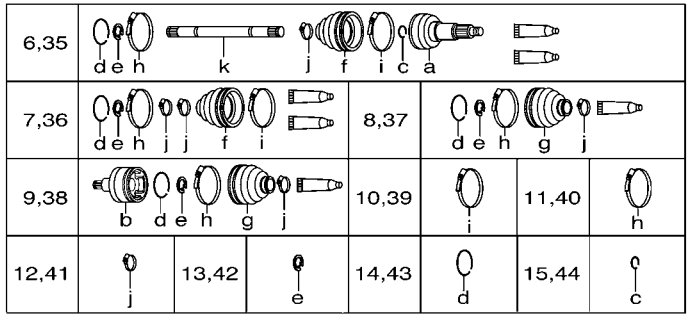

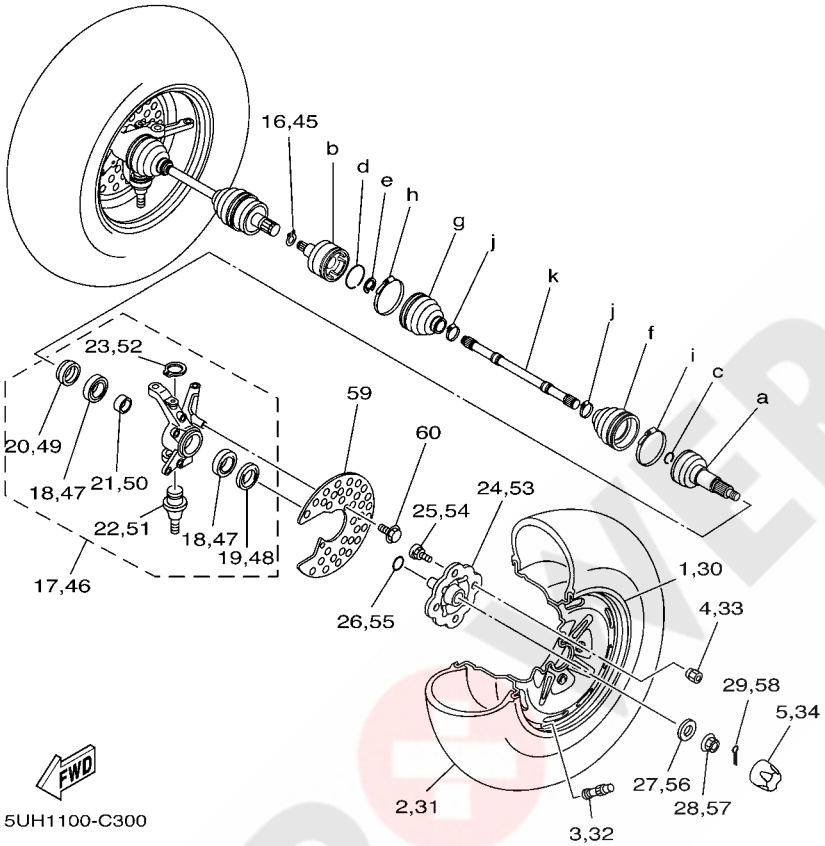

REF. NO.	PART NO.	DESCRIPTION	EUR	OCE				REMARKS
53	5ND–F5111–20	HUB, FRONT	1	1				
54	90114–10010	BOLT, SERRATION	4	4				
55	93210–27666	O-RING	1	1				
56	90201–168R1	WASHER, PLATE	1	1				
57	90171–16001	NUT, CASTLE	1	1				
58	91401–30030	PIN, COTTER	1	1				
59	5ND–F514A–00	RING, WHEEL 1 (LEFT)	2	2				
60	9582P–06012	BOLT, FLANGE	4	4				

POWER PARTS By 4QUAD

FIG. 31 FRONT BRAKE CALIPER

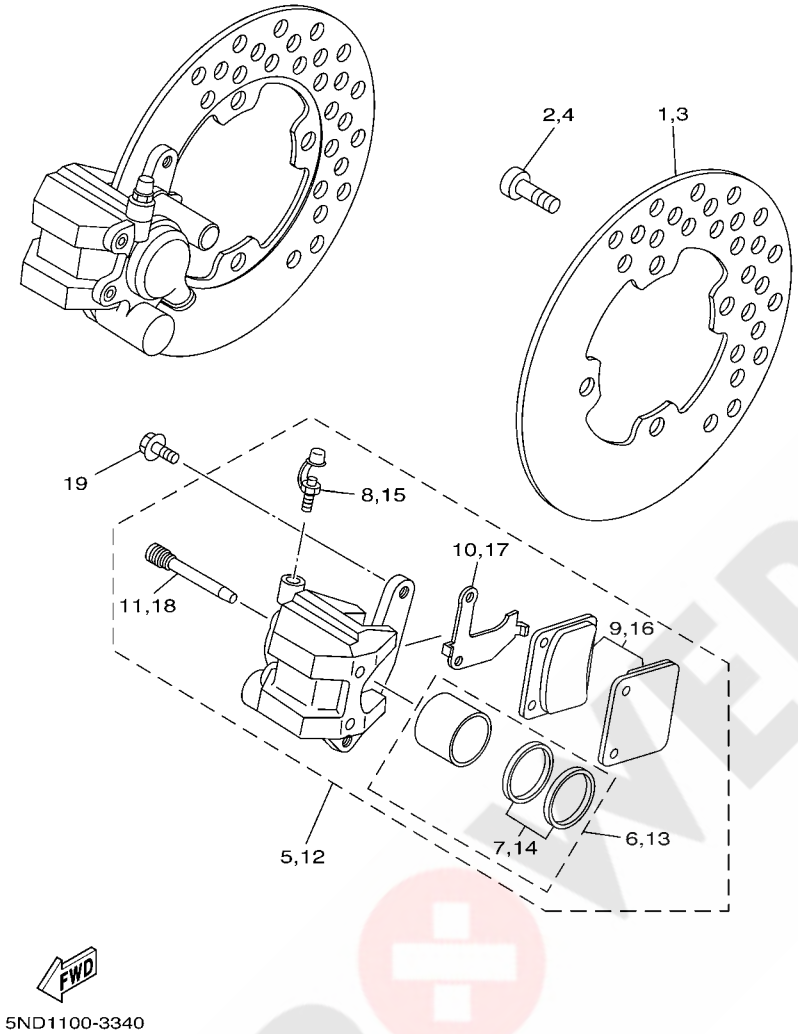

REF. NO.	PART NO.	DESCRIPTION	EUR	OCE				REMARKS
1	5ND–F582T–00	DISC, BRAKE (LEFT)	1	1				
2	90149–08268	SCREW	4	4				
3	5ND–F582T–00	DISC, BRAKE (LEFT)	1	1				
4	90149–08268	SCREW	4	4				
5	3GD–2580T–00	CALIPER ASSY (LEFT)	1	1				
6	3GD–W0057–00	.PISTON ASSY, CALIPER	1	1				
7	3GD–W0047–00	..CALIPER SEAL KIT	1	1				
8	1UY–W0048–50	.BLEED SCREW KIT	1	1				
9	3GD–W0045–00	.BRAKE PAD KIT	1	1				
10	3GD–25827–00	.SHIM, CALIPER	1	1				
11	3GD–25933–00	.PIN, PAD	2	2				
12	3GD–2580U–00	CALIPER ASSY (RIGHT)	1	1				
13	3GD–W0057–00	.PISTON ASSY, CALIPER	1	1				
14	3GD–W0047–00	..CALIPER SEAL KIT	1	1				
15	1UY–W0048–50	.BLEED SCREW KIT	1	1				
16	3GD–W0045–00	.BRAKE PAD KIT	1	1				
17	3GD–25828–00	.SHIM, CALIPER	1	1				
18	3GD–25933–00	.PIN, PAD	2	2				
19	90105–088B2	BOLT, FLANGE	4	4				

POWER PARTS By SQUAD

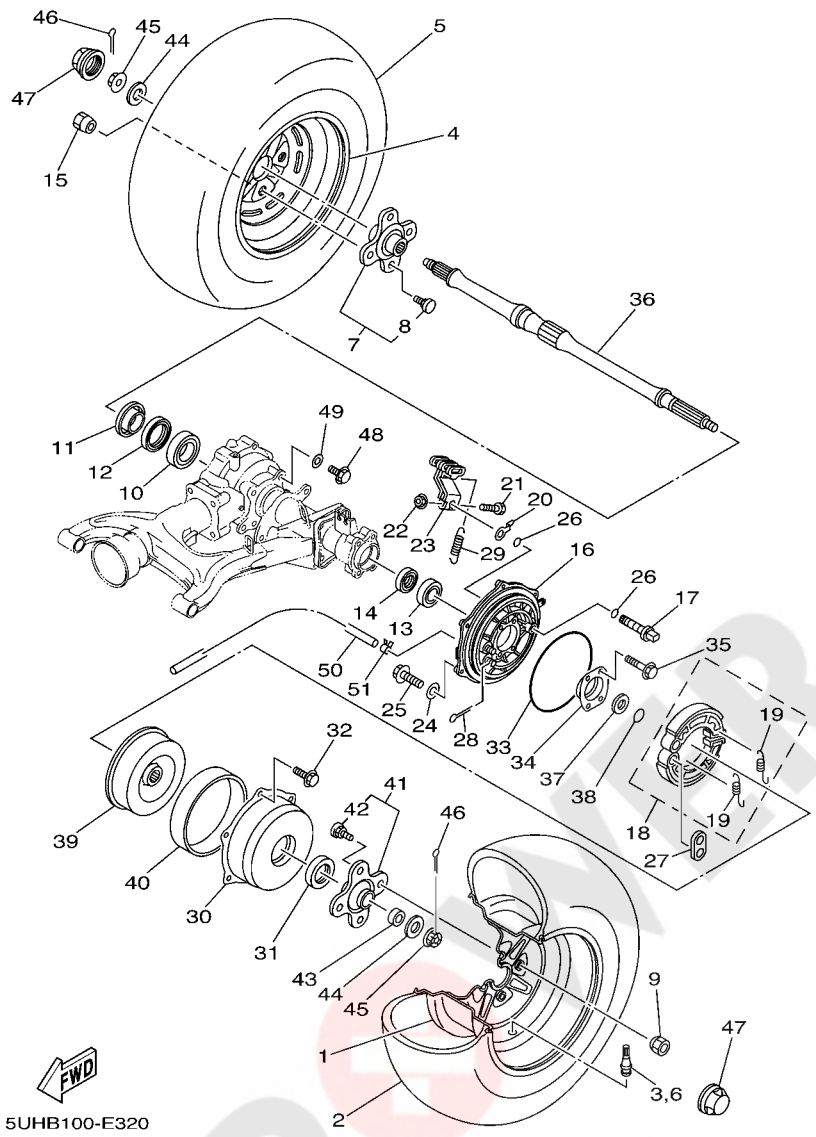

FIG. 32 REAR WHEEL

REF. NO.	PART NO.	DESCRIPTION	EUR	OCE				REMARKS
1	5ND–F5390–01	REAR WHEEL COMP.	1	1				
2	94110–12800	TIRE (AT25X10-12 M912Y)	1					CHENG SHIN
	94110–12801	TIRE (AT25X10-12 C828)		1				CHENG SHIN
3	93900–00813	VALVE, RIM (TR413)	1	1				
4	5ND–F5390–01	REAR WHEEL COMP.	1	1				
5	94110–12800	TIRE (AT25X10-12 M912Y)	1					CHENG SHIN
	94110–12801	TIRE (AT25X10-12 C828)		1				CHENG SHIN
6	93900–00813	VALVE, RIM (TR413)	1	1				
7	5ND–F5383–10	COLLAR, WHEEL	1	1				
8	90114–10804	.BOLT, SERRATION	4	4				
9	90179–10540	NUT	4	4				
10	93306–008Y0	BEARING	1	1				
11	4SH–25367–01	COVER, HUB DUST	1	1				
12	93106–47040	OIL SEAL	1	1				
13	93306–278Y0	BEARING	1	1				
14	93101–35097	OIL SEAL	1	1				
15	90179–10540	NUT	4	4				
16	5VH–F5321–00	PLATE, BRAKE SHOE	1	1				
17	5VH–F5351–00	CAMSHAFT	1	1				
18	5VH–WF536–00	BRAKE SHOE SET	1	1				
19	5VH–F5333–00	.SPRING, RETURN	2	2				
20	5VH–F533A–00	PLATE, INDICATOR	1	1				
21	5VH–F5833–00	BOLT, FITTING	1	1				
22	9560L–06200	NUT, SELF-LOCKING	1	1				
23	5VH–F5355–00	LEVER, CAMSHAFT	1	1				
24	5VH–F5898–00	GASKET	1	1				
25	5VH–F5818–00	BOLT, CALIPER	1	1				

POWER PARTS By ATV-QUAD

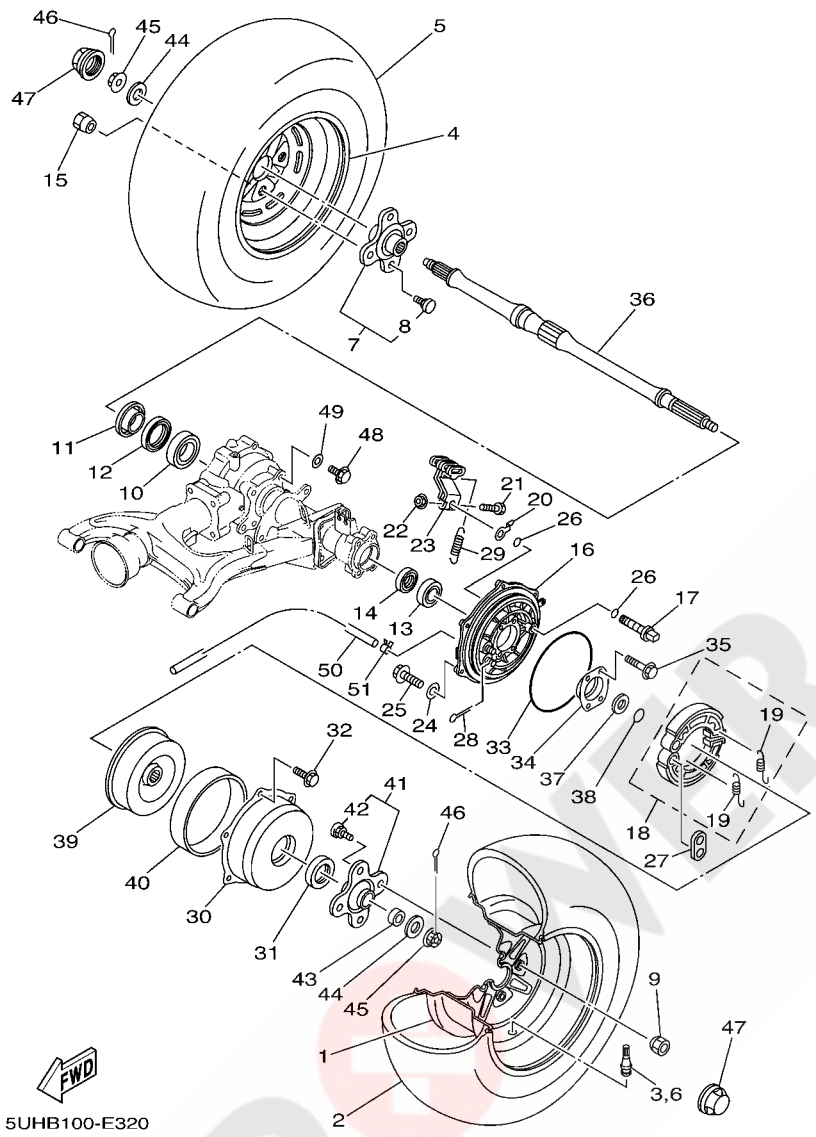

FIG. 32 REAR WHEEL

REF. NO.	PART NO.	DESCRIPTION	EUR	OCE				REMARKS
26	5VH–F5359–00	SEAL, CAMSHAFT	2	2				
27	5VH–F539F–00	PLATE 1	1	1				
28	91401–25020	PIN, COTTER	2	2				
29	90506–16482	SPRING, TENSION	1	1				
30	5FU–F5327–00	COVER, PLATE	1	1				
31	5FU–F5319–00	SEAL, HUB DUST	1	1				
32	9582P–06012	BOLT, FLANGE	6	6				
33	5FU–F537Y–00	SEAL, DUST	1	1				
34	4XE–G6513–00	RETAINER	1	1				
35	90105–08892	BOLT, FLANGE	4	4				
36	5TE–F5381–00	AXLE, WHEEL	1	1				
37	90387–284T0	COLLAR	1	1				
38	93210–26606	O-RING	1	1				
39	5FU–F531E–10	DRUM, BRAKE	1	1				
40	5FU–F5336–00	RING 2	1	1				
41	5FU–F5377–10	COLLAR, WHEEL	1	1				
42	90114–10804	.BOLT, SERRATION	4	4				
43	5FU–F5384–00	WASHER, WHEEL	1	1				
44	90201–168R1	WASHER, PLATE	2	2				
45	90171–16001	NUT, CASTLE	2	2				
46	91401–30030	PIN, COTTER	2	2				
47	5GT–2512A–00	CAP, WHEEL	2	2				
48	90105–10751	BOLT, FLANGE	4	4				
49	90201–101J1	WASHER, PLATE	4	4				
50	90445–07807	HOSE (L1150)	1	1				
51	90467–07093	CLIP	1	1				

POWER PARTS By 4xQUAD

FIG. 33 STEERING HANDLE & CABLE

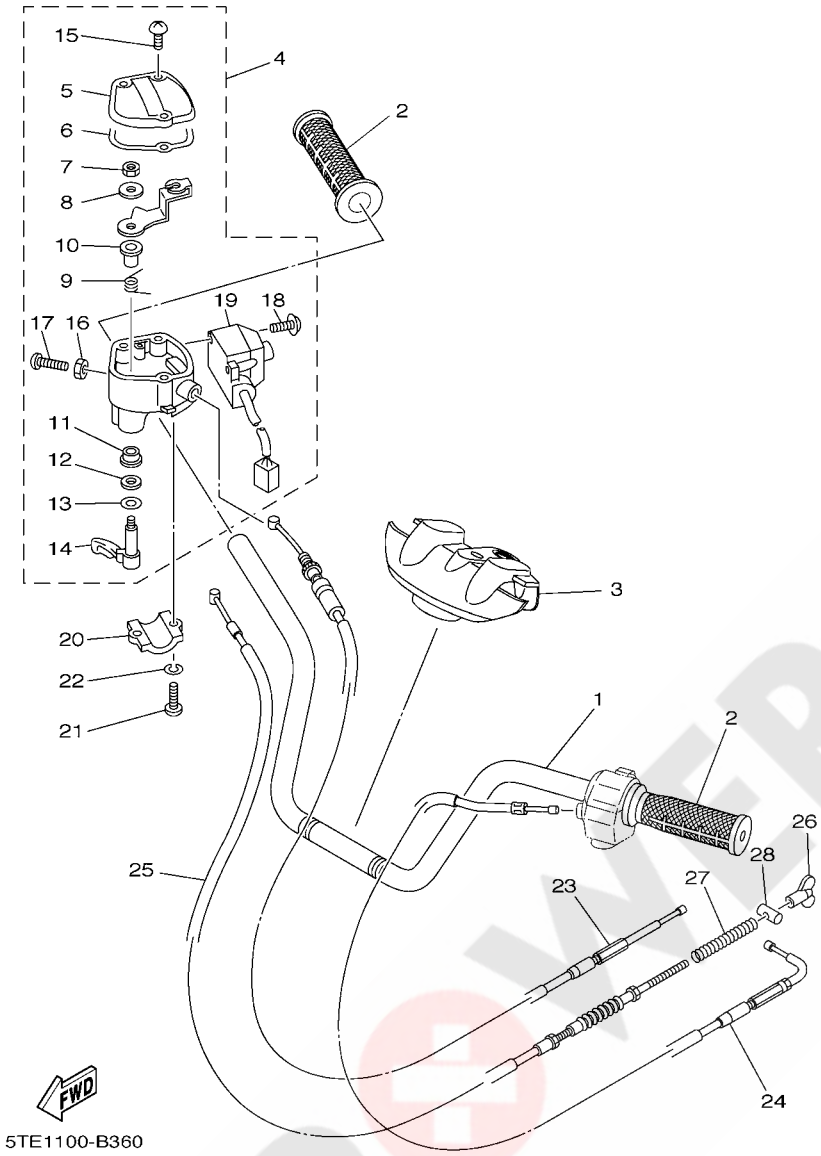

REF. NO.	PART NO.	DESCRIPTION	EUR	OCE				REMARKS
1	5FU–F6111–10	HANDLEBAR	1	1				
2	5FU–F6241–10	GRIP	2	2				
3	5ND–F6124–00	PROTECTOR, HANDLEBAR	1	1				
4	4WV–26250–10	THROTTLE LEVER ASSY	1	1				
5	4KB–2628F–10	.CAP, GEAR	1	1				
6	4KB–2628G–00	.GASKET	1	1				
7	95607–05100	.NUT, U	1	1				
8	1NV–26398–00	.WASHER	1	1				
9	1NV–26304–00	.SPRING	1	1				
10	1NV–26259–01	.COLLAR	1	1				
11	1NV–2625K–00	.COLLAR	1	1				
12	93104–09025	.OIL SEAL	1	1				
13	1NV–26129–00	.WASHER	1	1				
14	1NV–2625G–01	.LEVER, THROTTLE	1	1				
15	90149–04278	.SCREW	3	3				
16	95307–05700	.NUT	1	1				
17	98507–05020	.SCREW, PAN HEAD	1	1				
18	97607–04210	.SCREW,WITH WASHER	2	2				
19	4WV–83976–00	.SWITCH, HANDLE 1	1	1				
20	4V4–82913–00	HOLDER, LEVER LOWER 1	1	1				
21	98507–05020	SCREW, PAN HEAD	2	2				
22	92907–05600	WASHER, PLATE	2	2				
23	5GH–26311–01	CABLE, THROTTLE 1	1	1				
24	5VH–F6331–00	CABLE, STARTER 1	1	1				
25	5TE–26341–00	CABLE, BRAKE	1	1				
26	20E–26343–00	NUT, ADJUSTING	1	1				
27	90501–10782	SPRING, COMPRESSION	1	1				

POWER PARTS By 4xQUAD

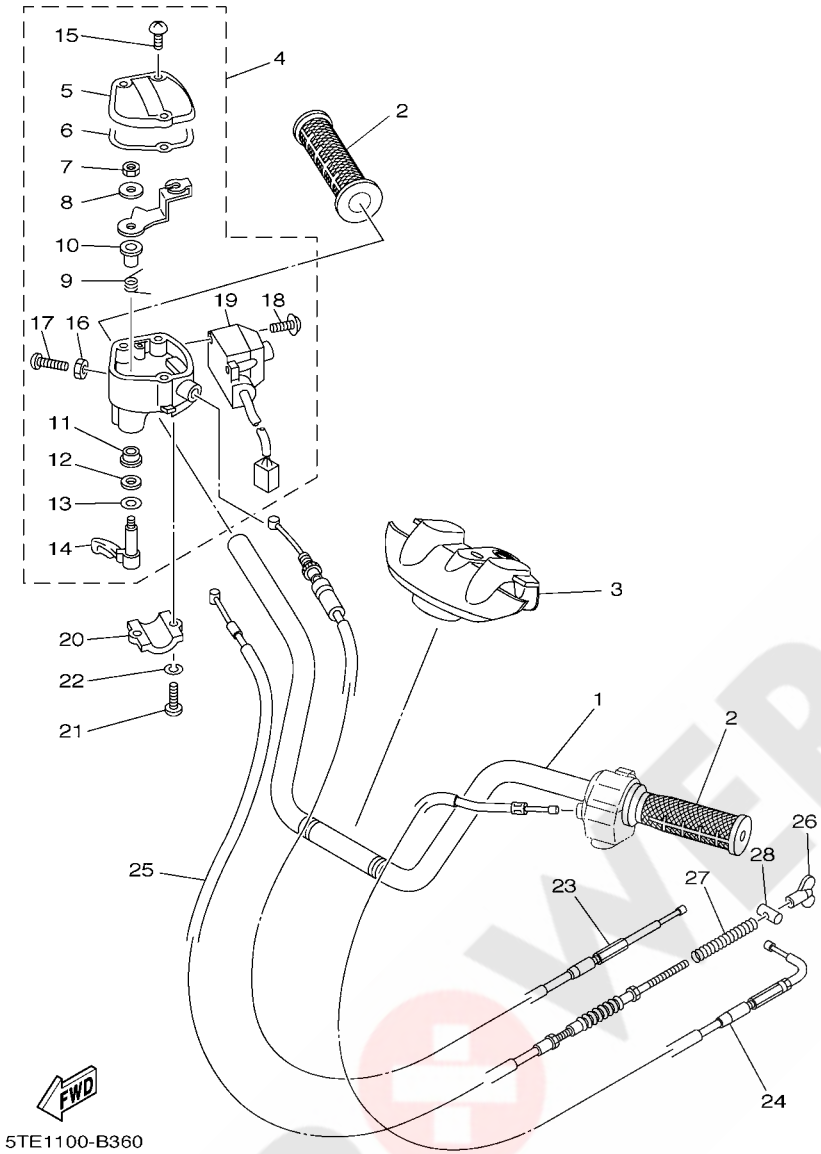

FIG. 33 STEERING HANDLE & CABLE

REF. NO.	PART NO.	DESCRIPTION	EUR	OCE				REMARKS
28	90249–12008	PIN	1	1				

POWER PARTS By 4xQUAD

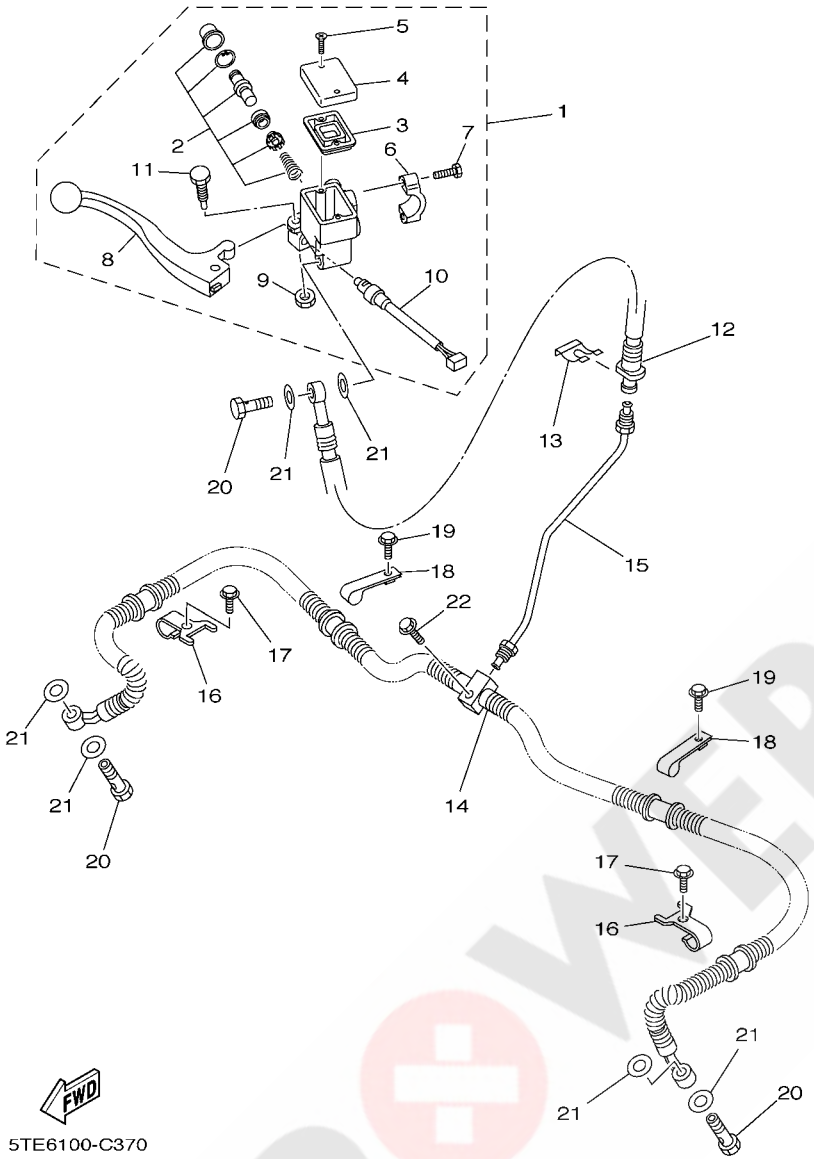

FIG. 34 FRONT MASTER CYLINDER

REF. NO.	PART NO.	DESCRIPTION	EUR	OCE				REMARKS
1	5KM–2583T–01	MASTER CYLINDER ASSY	1	1				
2	8CR–W0041–00	.CYLINDER KIT, MASTER	1	1				
3	4L0–25854–00	.DIAPHRAGM, RESERVOIR	1	1				
4	5JX–25852–01	.CAP, RESERVOIR	1	1				
5	98706–04012	.SCREW, FLAT HEAD	2	2				
6	5GH–25867–00	.BRACKET, MASTER CYLINDER	1	1				
7	5EB–26332–00	.BOLT	2	2				
8	5KM–83922–00	.LEVER 2	1	1				
9	95606–06100	.NUT, U	1	1				
10	5LP–83980–00	.FRONT STOP SWITCH ASSY	1	1				
11	1FK–2589F–00	.BOLT, LEVER	1	1				
12	5ND–F5872–00	HOSE, BRAKE 1	1	1				
13	2GU–25866–00	CIRCLIP	1	1				
14	5ND–F5873–00	HOSE, BRAKE 2	1	1				
15	5ND–F5871–00	PIPE, BRAKE	1	1				
16	5ND–F5875–00	HOLDER, BRAKE HOSE 1	2	2				
17	9582P–06012	BOLT, FLANGE	2	2				
18	5ND–F3192–00	BAND	2	2				
19	9582P–06012	BOLT, FLANGE	2	2				
20	90401–10159	BOLT, UNION	3	3				
21	90201–10118	WASHER, PLATE	6	6				
22	95817–06025	BOLT, FLANGE	1	1				

POWER PARTS By 4xQUAD

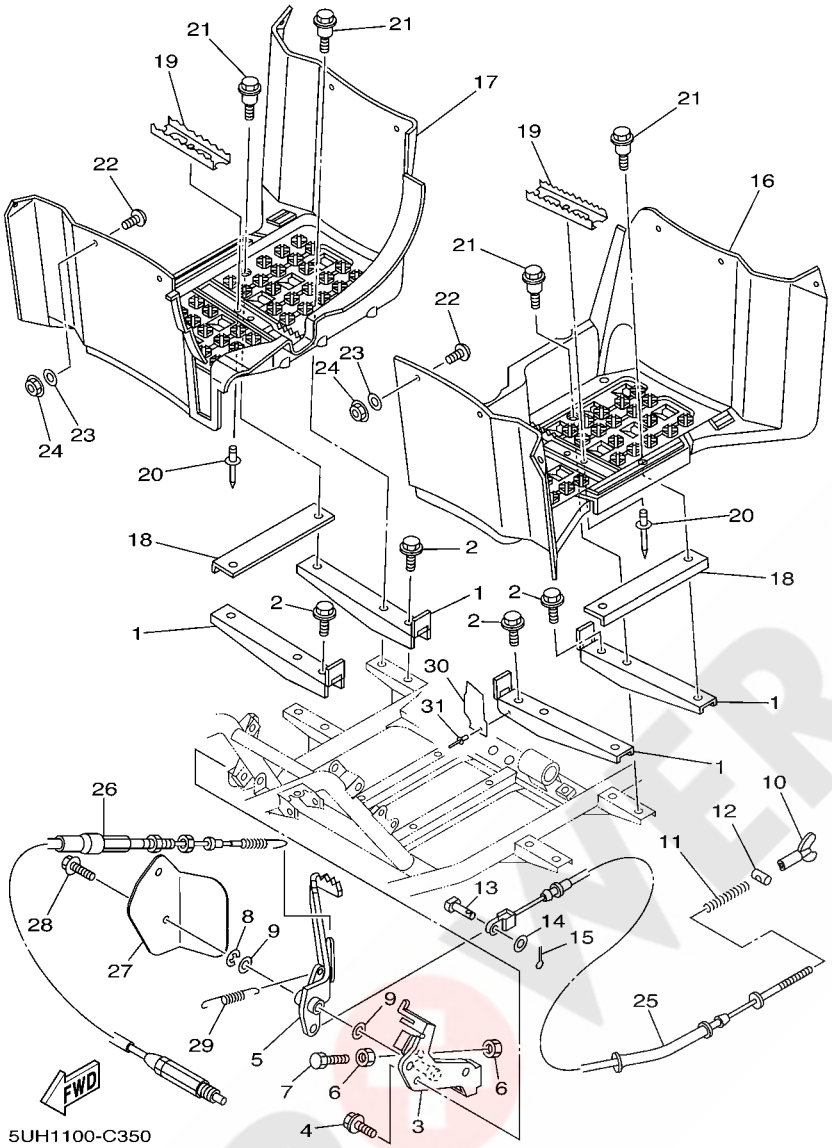

FIG. 35 STAND & FOOTREST

REF. NO.	PART NO.	DESCRIPTION	EUR	OCE				REMARKS
1	5ND–F7471–01	BAR, FOOTREST 1	4	4				
2	9581P–08012	BOLT, FLANGE	4	4				
3	5TE–F7412–10	BRACKET, FOOTREST 1	1	1				
4	9581P–08012	BOLT, FLANGE	3	3				
5	5TE–F7211–00	PEDAL, BRAKE	1	1				
6	95317–06700	NUT	2	2				
7	97017–06020	BOLT	1	1				
8	93430–10015	CIRCLIP	1	1				
9	90201–144J2	WASHER, PLATE	2	2				
10	20E–26343–00	NUT, ADJUSTING	1	1				
11	90501–10782	SPRING, COMPRESSION	1	1				
12	90249–12008	PIN	1	1				
13	90240–08124	PIN, CLEVIS	1	1				
14	90201–08083	WASHER, PLATE	1	1				
15	91401–20020	PIN, COTTER	1	1				
16	5ND–F7453–01	COVER 1	1	1				
17	5ND–F7463–01	COVER 2	1	1				
18	5ND–F7445–00	PLATE 1	2	2				
19	5UH–F741A–00	ARM 1	2	2				
20	90267–489U9	RIVET, BLIND	2	2				
21	90109–06072	BOLT	8	8				
22	90149–05299	SCREW	12	12				
23	90201–05029	WASHER, PLATE	12	12				
24	95707–05300	NUT, FLANGE	12	12				
25	5TE–26361–00	CABLE, BRAKE	1	1				
26	5GH–2637F–00	CABLE, CONTROL 2	1	1				
27	5UH–F7491–00	PROTECTOR	1	1				

POWER PARTS By axQUAD

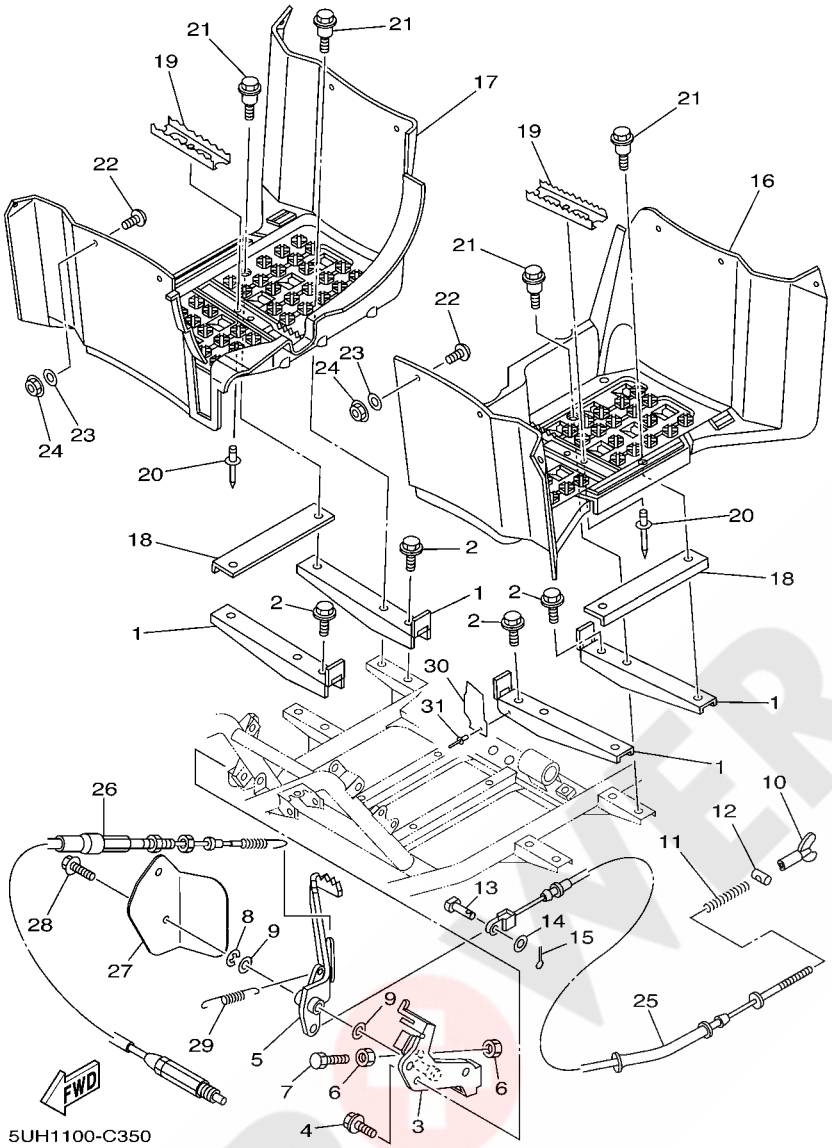

FIG. 35 STAND & FOOTREST

REF. NO.	PART NO.	DESCRIPTION	EUR	OCE				REMARKS
28	90119–06009	BOLT, WITH WASHER	1	1				
29	90506–12403	SPRING, TENSION	1	1				
30	5UH–F7445–00	PLATE 1	1	1				
31	90267–489U1	RIVET,BLIND	1	1				

POWER PARTS By 4xQUAD

FIG. 36 GUARD

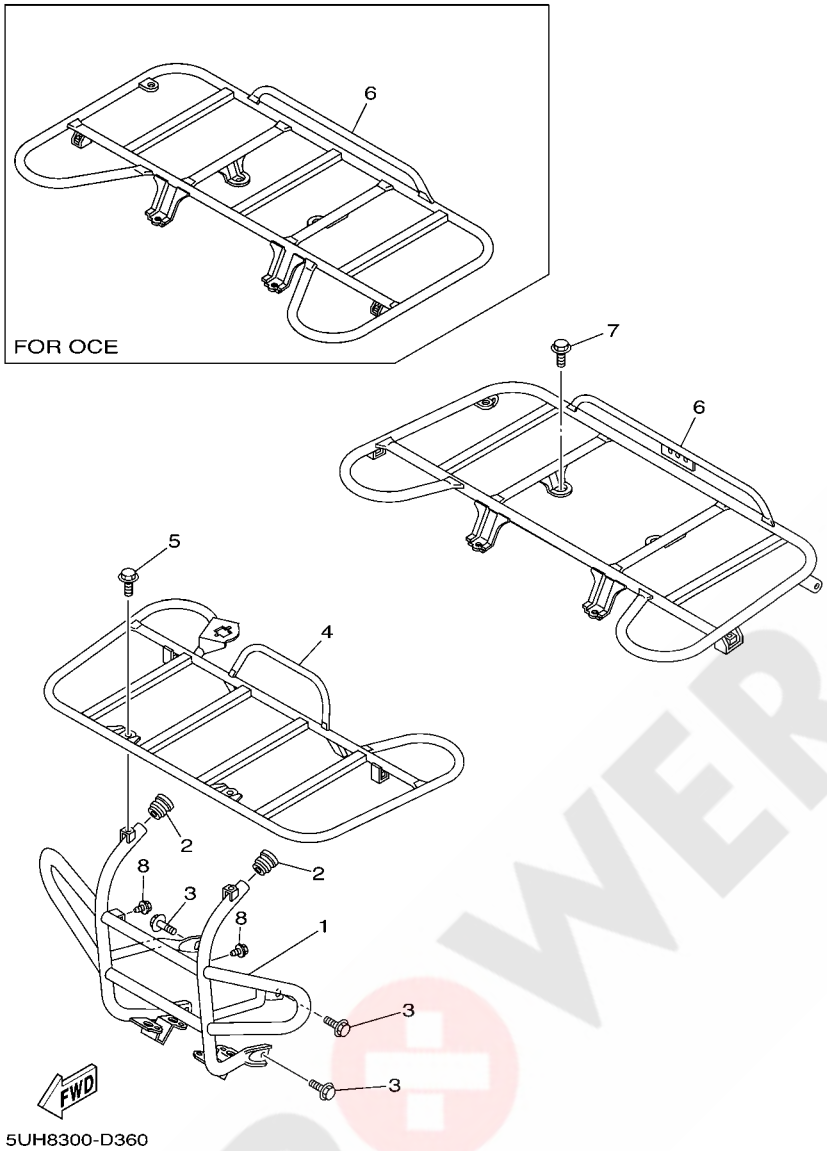

REF. NO.	PART NO.	DESCRIPTION	EUR	OCE				REMARKS
1	5UH–F845N–00	BAR, CARRY FRONT	1	1				
2	4XE–F1399–00	CAP, TOOL BOX	2	2				
3	9581P–08012	BOLT, FLANGE	4	4				
4	5TE–F4841–01	CARRIER, FRONT	1	1				
5	9581P–08012	BOLT, FLANGE	4	4				
6	5TE–F4842–10	CARRIER, REAR	1					
	5ND–F4842–00	CARRIER, REAR		1				
7	9581P–08012	BOLT, FLANGE	4	4				
8	90119–06060	BOLT, WITH WASHER	2	2				

POWER PARTS By ExQUAD

FIG. 37 GENERATOR

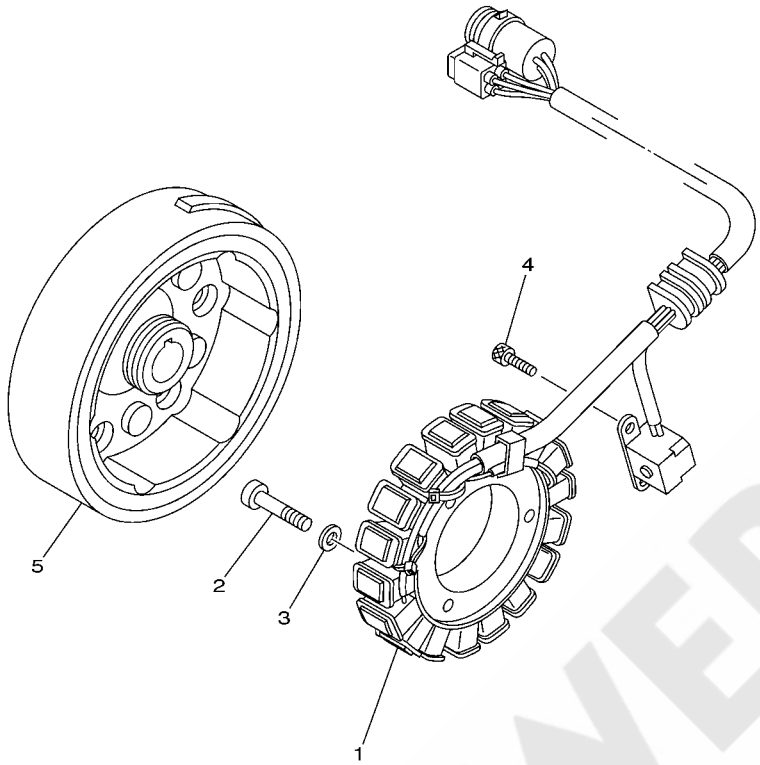

5UH1100-C370

REF. NO.	PART NO.	DESCRIPTION	EUR	OCE				REMARKS
1	5UH–81410–00	STATOR ASSY	1	1				
2	98507–06030	SCREW, PAN HEAD	3	3				
3	92907–06600	WASHER, PLATE	3	3				
4	91317–05012	BOLT	2	2				
5	5UH–81450–00	ROTOR ASSY	1	1				

POWER PARTS By 4xQUAD

FIG. 38 STARTING MOTOR

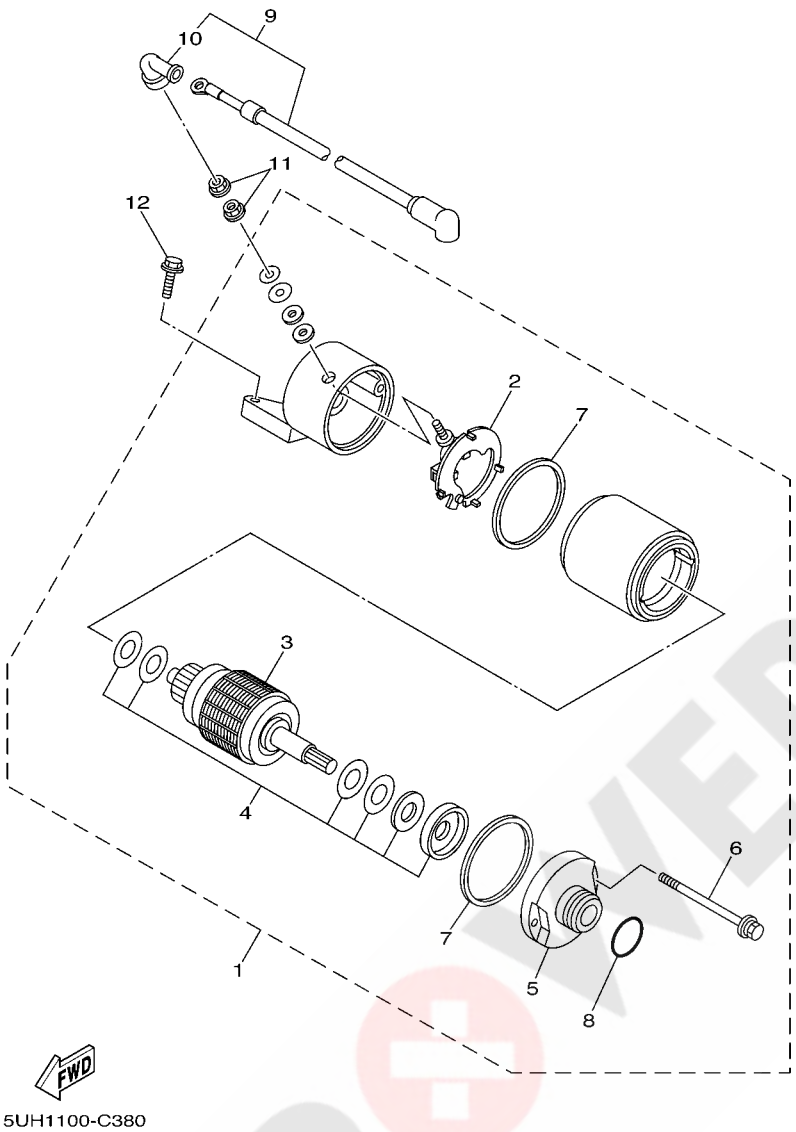

REF. NO.	PART NO.	DESCRIPTION	EUR	OCE				REMARKS
1	3HE–81890–00	MOTOR ASSY	1	1				
2	3HE–81840–00	.BRUSH HOLDER ASSY	1	1				
3	3HE–81850–00	.ARMATURE ASSY	1	1				
4	3AJ–81809–00	.WASHER KIT	1	1				
5	3HE–81830–00	.FRONT BRACKET ASSY	1	1				
6	3HE–81826–00	.BOLT	2	2				
7	11H–81844–00	.GASKET	2	2				
8	1FK–81847–00	.O-RING	1	1				
9	3XF–81815–00	CORD, STARTER MOTOR	1	1				
10	4G0–81871–00	.CAP	1	1				
11	4XV–8182A–00	NUT	2	2				
12	95027–06025	BOLT, FLANGE	2	2				

POWER PARTS By axQUAD

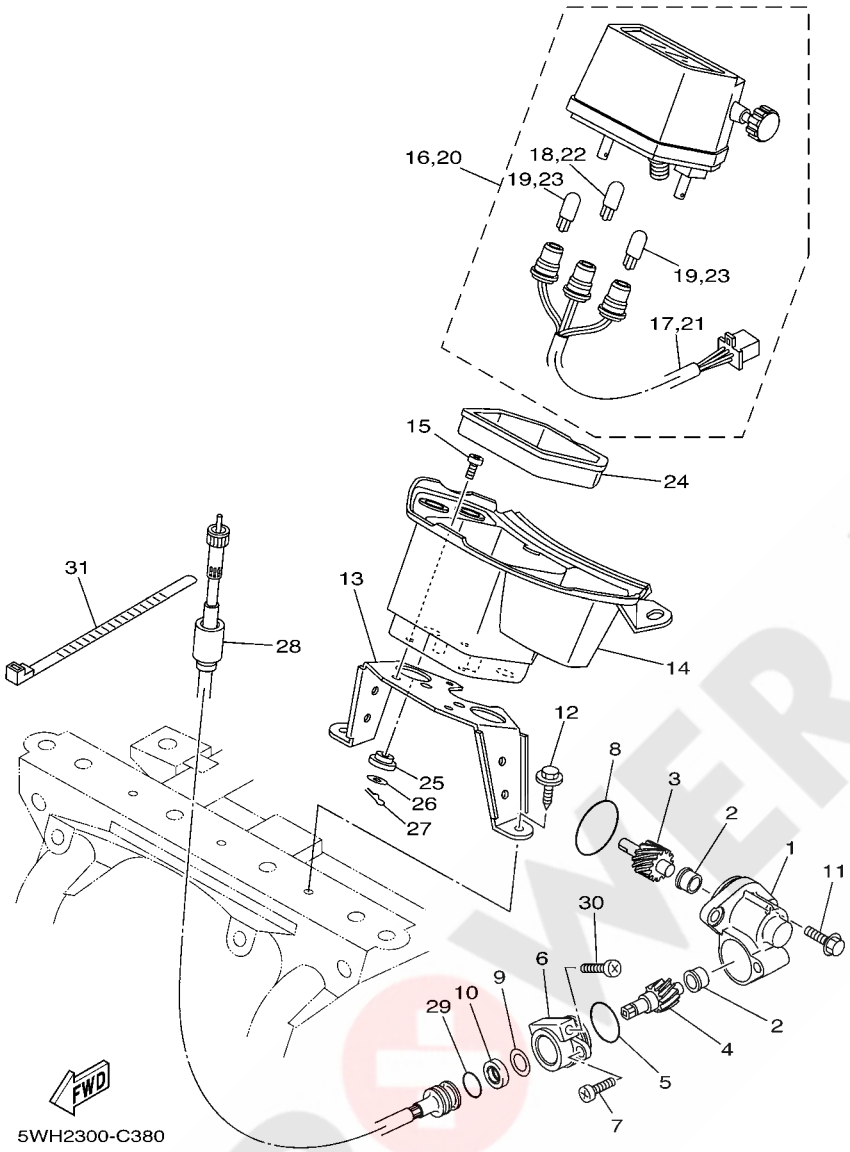

FIG. 39 METER

REF. NO.	PART NO.	DESCRIPTION	EUR	OCE				REMARKS
1	4WV–17811–00	HOUSING, TACHOMETER GEAR	1	1				
2	90381–08002	BUSH, SOLID	2	2				
3	4WV–17831–00	GEAR, DRIVE	1	1				
4	4WV–17841–00	GEAR, DRIVEN	1	1				
5	93210–24253	O-RING	1	1				
6	59V–17811–00	HOUSING, TACHOMETER GEAR	1	1				
7	98507–06016	SCREW, PAN HEAD	1	1				
8	93210–32172	O-RING	1	1				
9	90201–12163	WASHER, PLATE	1	1				
10	93102–08307	OIL SEAL	1	1				
11	90105–06053	BOLT, FLANGE	2	2				
12	90119–06060	BOLT, WITH WASHER	2	2				
13	5UH–F834L–00	JOINT 2	1	1				
14	5UH–F837L–10	PANEL, CONSOLE 1	1	1				
15	98507–05010	SCREW, PAN HEAD	3	3				
16	4SH–83570–10	SPEEDOMETER ASSY	1	1				UR KM/H
17	4SH–83536–10	.SOCKET, METER	1	1				UR
18	42X–83517–00	.BULB (12V-3W)	1	1				UR
19	2GV–83517–00	.BULB (12V-1.7W T6.5)	2	2				UR
20	4SH–83570–00	SPEEDOMETER ASSY	1					UR MILE/H
21	4SH–83536–00	.SOCKET, METER	1					UR
22	4R0–83517–00	.BULB (12V-3.4W T10)	1					UR
23	3GM–83517–00	.BULB (12V-1.7W)	2					UR
24	5UH–H252R–00	DAMPER	1	1				
25	1M1–83526–00	DAMPER 2	2	2				
26	4X8–83524–00	WASHER, SPECIAL	2	2				
27	437–83525–00	CLIP	2	2				

POWER PARTS BY ATVQUAD

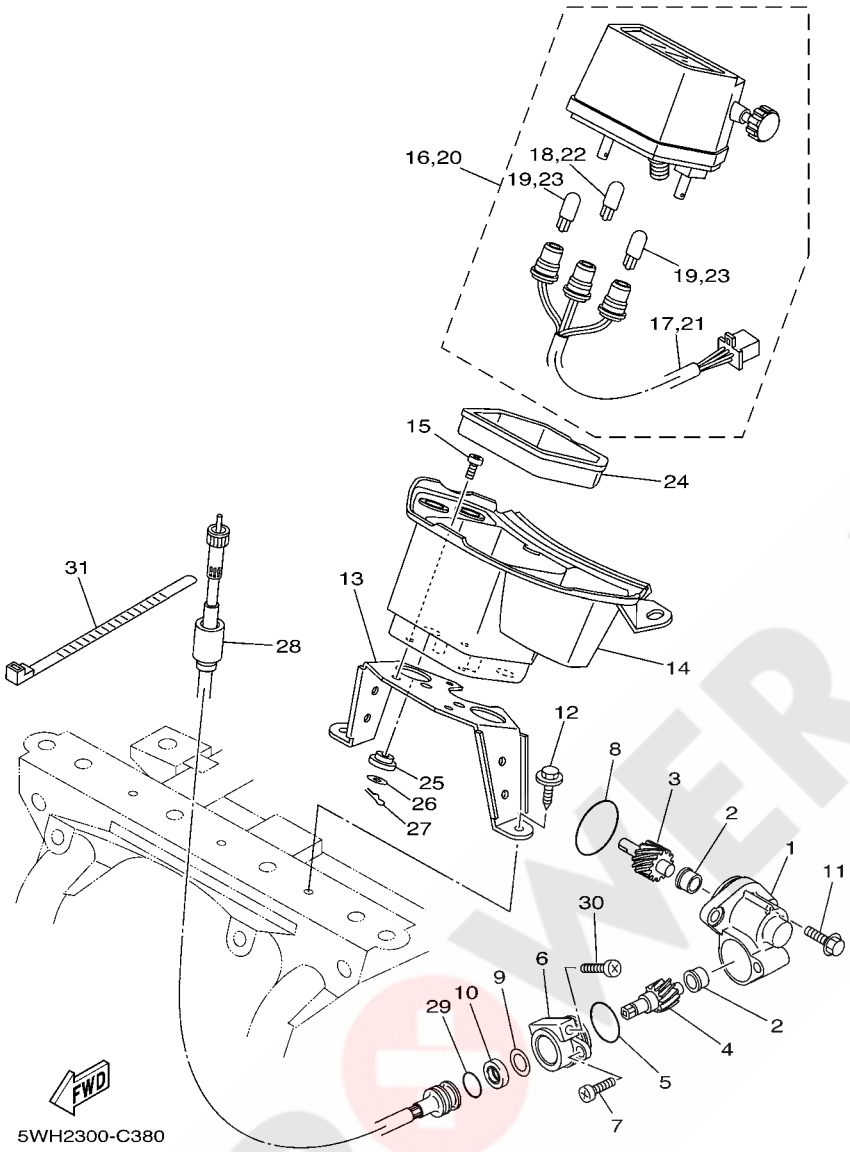

FIG. 39 METER

REF. NO.	PART NO.	DESCRIPTION	EUR	OCE				REMARKS
28	5VH–H3550–00	SPEEDOMETER CABLE ASSY	1	1				
29	93210–14104	O-RING	1	1				
30	98507–06030	SCREW, PAN HEAD	1	1				
31	90464–31827	CLAMP	1	1				

POWER PARTS By 4xQUAD

FIG. 40 HEADLIGHT

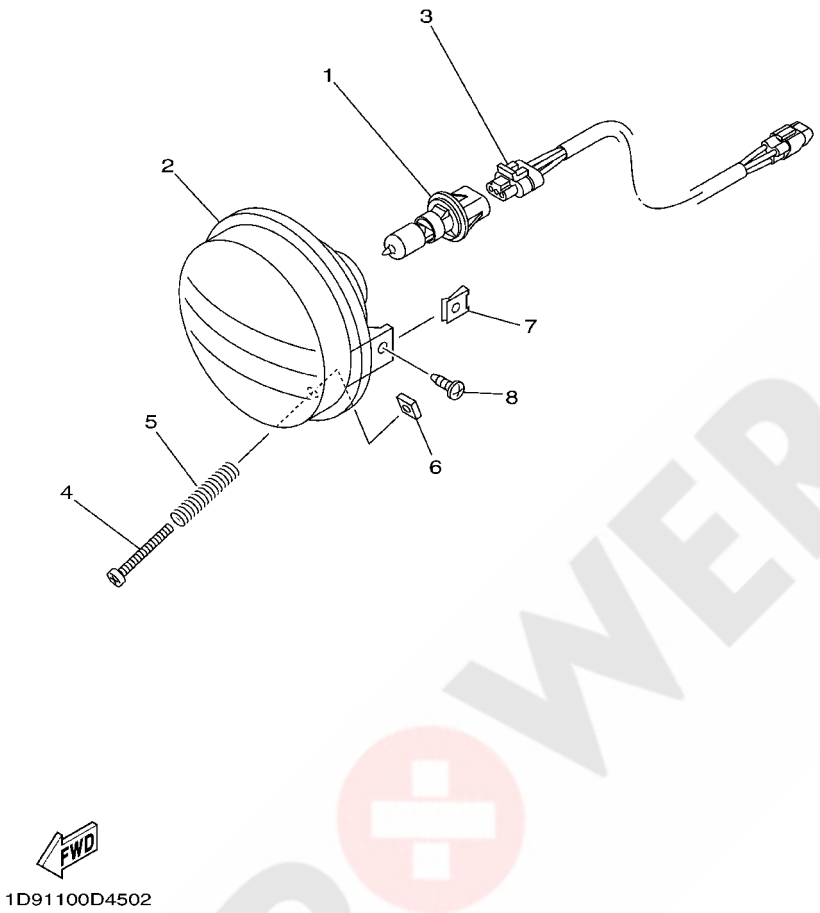

REF. NO.	PART NO.	DESCRIPTION	EUR	OCE				REMARKS
1	5FU–H4314–10	BULB, HEADLIGHT(12V-30/30W)	2	2				Go to P/N:PE0-MC-060007
2	5FU–H4320–10	LENS ASSY	2	2				Go to P/N:PE0-MC-060007
3	5FU–H4340–10	SOCKET CORD ASSY 1	2	2				Go to P/N:PE0-MC-060007
4	98507–03540	SCREW, PAN HEAD	2	2				
5	2GU–84332–00	SPRING, SCREW	2	2				
6	2GU–84334–00	NUT, ADJUSTING	2	2				
7	90183–05008	NUT, SPRING	4	4				
8	90150–05802	SCREW, ROUND HEAD	4	4				

POWER PARTS By 4QUAD

PARTS NEWS

YAMAHA
YAMAHA MOTOR CO., LTD.
2500 SHINGAI IWATA SHIZUOKA JAPAN

News No. PE0-MC-060007

Date: Feb./10/ 2006

Signature: K.Otsuka

Model	See the"List of Models and CATALOGUE No's below."
Subject	PARTS CATALOGUE CORRECTIONS
CATALOGUE NO.	See the"List of Models and CATALOGUE No's below."

Revised parts catalogue will be issued by PDF and be uploaded to YPEC within one month.
(YPEC=Yamaha Parts Electrical Catalogue = Website parts catalogue)

1. PARTS CATALOGUE LIST

NO.	MODEL	CATALOGUE NO	FIG.NO	PAGE	Starting Serial No.
1	YFM35FAV (5UHB/5UHC)	1E5UH-100E1 2E5UH-100E1	41	F2	5UHB:AH09Y-028101 and following 5UHC:AH09W-304801 and following
2	YFM35FAV (5UHD/5UHE)	1E5UH-300E1 2E5UH-300E1	40	F2	5UHD:AH13W-505301 and following 5UHE:AH13W-505701 and following
3	YFM35FAV (5UHF)	1E5UH-110EA	40	56	5UHF:AH13Y-006001 and following
4	YFM35BAV (5WH7)	1E5WH-110EA	39	52	5WH7:AH10Y-019501 and following
5	YFM35BAV (5WH8/5WH9)	1E5WH-300EA 2E5WH-300EA	39	E12	5WH8:AH10W-506201 and following 5WH9:AH10W-506101 and following

2. LIST CORRECTION

FIG.39, 40, 41 HEADLIGHT

Ref.No.	OLD PART No.	NEW PART No.	PART NAME	Q'TY	INTERCHANGE ABILITY	REMARKS
1	5FU-H4314-00	5FU-H4314-10	BULB, HEADLIGHT(12V-30/30W)	2	○	Illustration & Part number revision
2	5FU-H4320-00	5FU-H4320-10	LENS ASSY	2	○	
3	5FU-H4340-00	5FU-H4340-10	SOCKET CORD ASSY 1	2	○	

* The parts marked with ○—○ indicates interchangeability with a set.

* These changes are applied from initial production.

3. ILLUSTRATION CORRECTION

FIG.39, 40, 41 HEADLIGHT SECTION

(INCORRECT) (CORRECT)

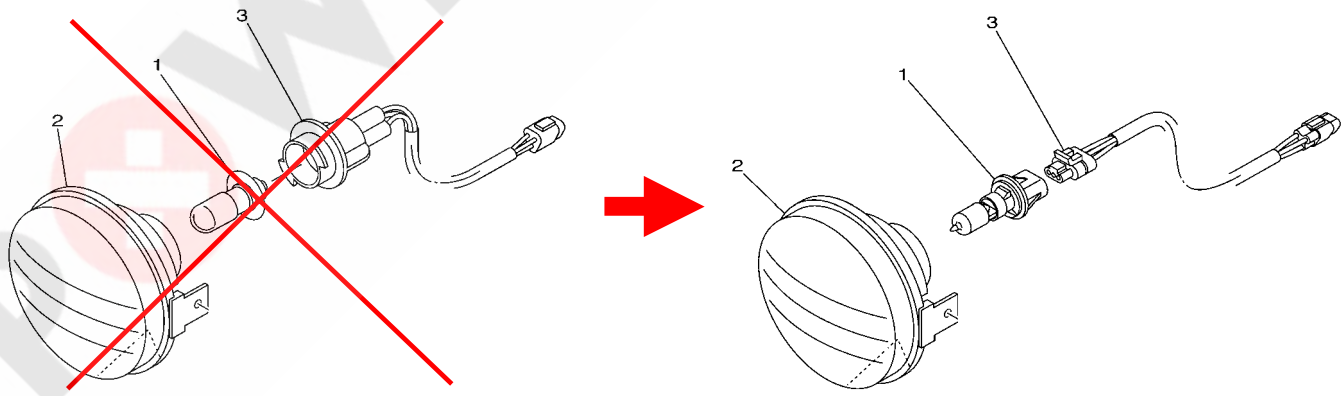

Thank you very much for your cooperation.

Parts Manager Check	Service Manager Check	Parts Manager File

AMAHA MOTOR CO.,LTD
2500 Shingai Iwata Shizuoka 438-8501.Japan
Technical Publication Dept.

YAMAHA GENUINE Parts & Accessories

FIG. 41 TAILLIGHT

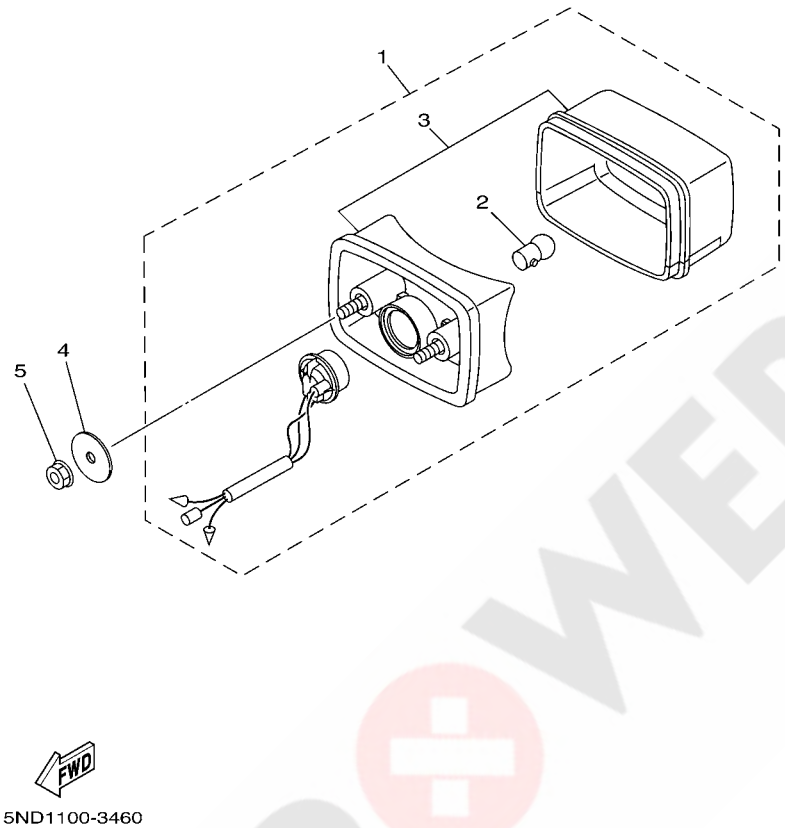

REF. NO.	PART NO.	DESCRIPTION	EUR	OCE				REMARKS
1	5KM–84710–00	TAILLIGHT UNIT ASSY	1	1				
2	1A2–84714–41	.BULB (12V-21/5W)	1	1				
3	5KM–8472C–10	.LENS, TAILLIGHT	1	1				
4	90201–06074	WASHER, PLATE	2	2				
5	95707–06300	NUT, FLANGE	2	2				

POWER PARTS By 4xQUAD

FIG. 42 HANDLE SWITCH & LEVER

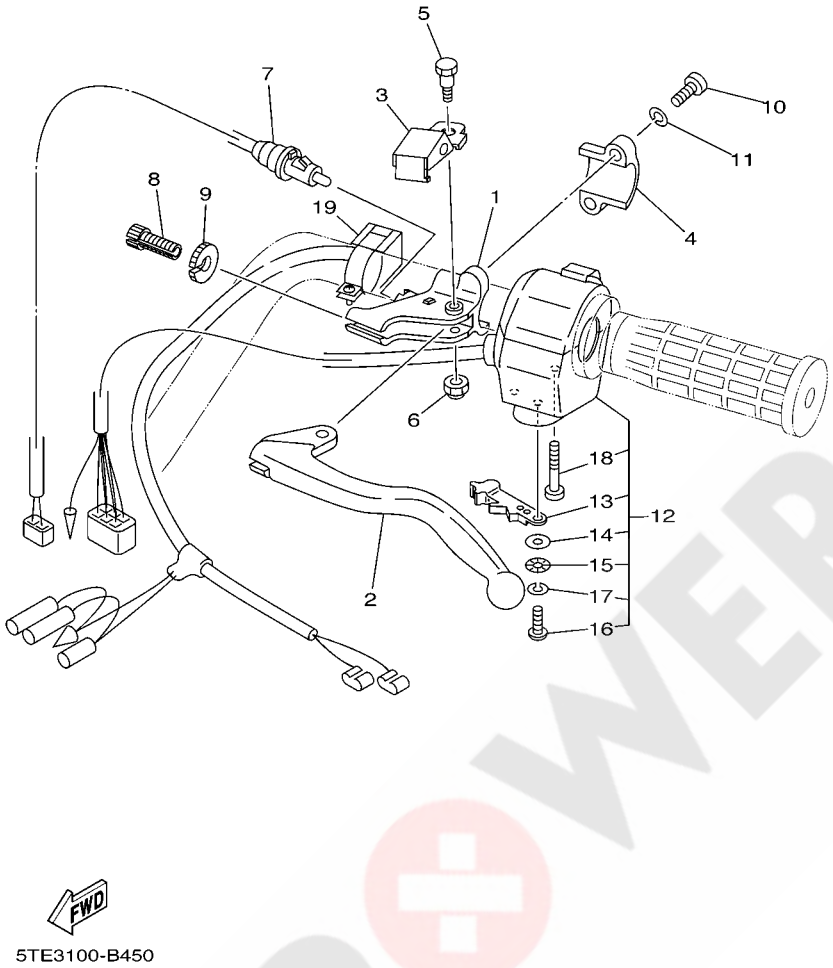

REF. NO.	PART NO.	DESCRIPTION	EUR	OCE				REMARKS
1	1YW–82911–02	HOLDER, LEVER 1	1	1				
2	2HT–83912–00	LEVER 1	1	1				
3	1YW–83965–00	LEVER, LOCK	1	1				
4	2XJ–82913–00	HOLDER, LEVER LOWER 1	1	1				
5	90109–06576	BOLT	1	1				
6	95607–06100	NUT, U	1	1				
7	3FA–83980–03	FRONT STOP SWITCH ASSY	1	1				
8	90123–08046	BOLT	1	1				
9	90179–08148	NUT	1	1				
10	98507–06020	SCREW, PAN HEAD	2	2				
11	92907–06100	WASHER, SPRING	2	2				
12	5LP–83973–01	SWITCH, HANDLE 3	1	1				
13	5GH–83941–00	.LEVER, STARTER	1	1				
14	1UY–83909–00	.WASHER, SPECIAL	1	1				
15	3L4–83943–00	.WASHER, STARTER	1	1				
16	98517–05012	.SCREW, PAN HEAD	1	1				
17	92907–05100	.WASHER, SPRING	1	1				
18	98507–05030	.SCREW, PAN HEAD	2	2				
19	4GB–83976–00	SWITCH, HANDLE 1	1	1				

POWER PARTS BY 4QUAD

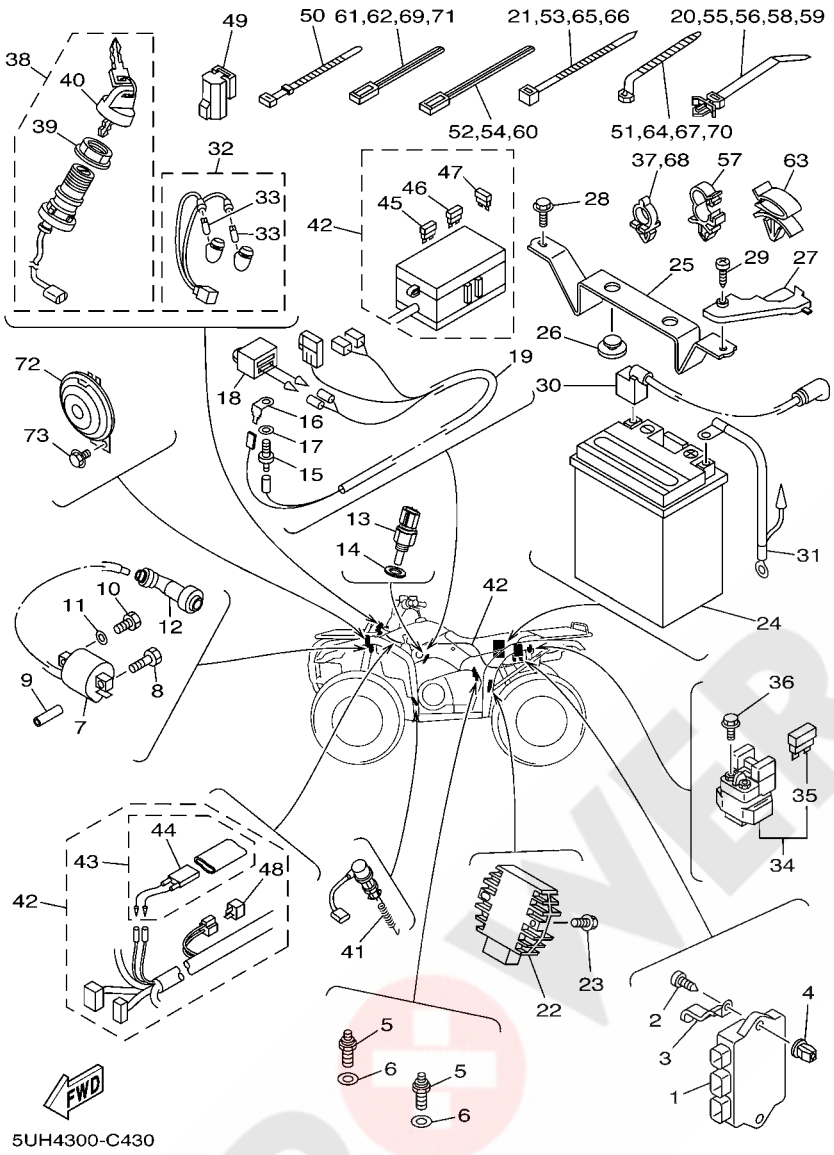

FIG. 43 ELECTRICAL 1

REF. NO.	PART NO.	DESCRIPTION	EUR	OCE				REMARKS
1	5UH–85540–00	C.D.I. UNIT ASSY	1	1				
2	97707–60420	SCREW, TAPPING	1	1				
3	90462–06016	CLAMP	1	1				
4	90338–08226	PLUG	1	1				
5	3GB–82540–01	NEUTRAL SWITCH ASSY	2	2				
6	90430–10148	GASKET	2	2				
7	5KM–82310–00	IGNITION COIL ASSY	1	1				
8	90109–06723	BOLT	1	1				
9	5UH–H1318–00	SPACER	1	1				
10	97007–06020	BOLT	1	1				
11	92907–06600	WASHER, PLATE	1	1				
12	1UY–82370–20	PLUG CAP ASSY	1	1				
13	4GB–83591–10	THERMO UNIT	1	1				
14	90201–12172	WASHER, PLATE	1	1				
15	5FU–83790–00	HEATER ASSY (15W)	1	1				AP
16	5FU–82103–00	TERMINAL 1	1	1				AP
17	90201–08016	WASHER, PLATE	1	1				AP
18	5FU–82560–20	THERMO SWITCH ASSY	1	1				AP
19	5TE–82509–00	WIRE, SUB LEAD	1	1				AP
20	90464–25800	CLAMP	1	1				AP
21	90464–31827	CLAMP	1	1				AP
22	5GT–81960–00	RECTIFIER & REGULATOR ASSY	1	1				
23	95807–06020	BOLT, FLANGE	2	2				
24	5TE–H2100–00	BATTERY ASSY(YUASA YTX14AH)	1	1				
25	5TE–H2128–01	BRACKET, BATTERY	1	1				
26	371–82121–00	PAD, BATTERY	2	2				
27	5ND–H2119–00	COVER, LEAD WIRE	1	1				

POWER PARTS By AKQUAD

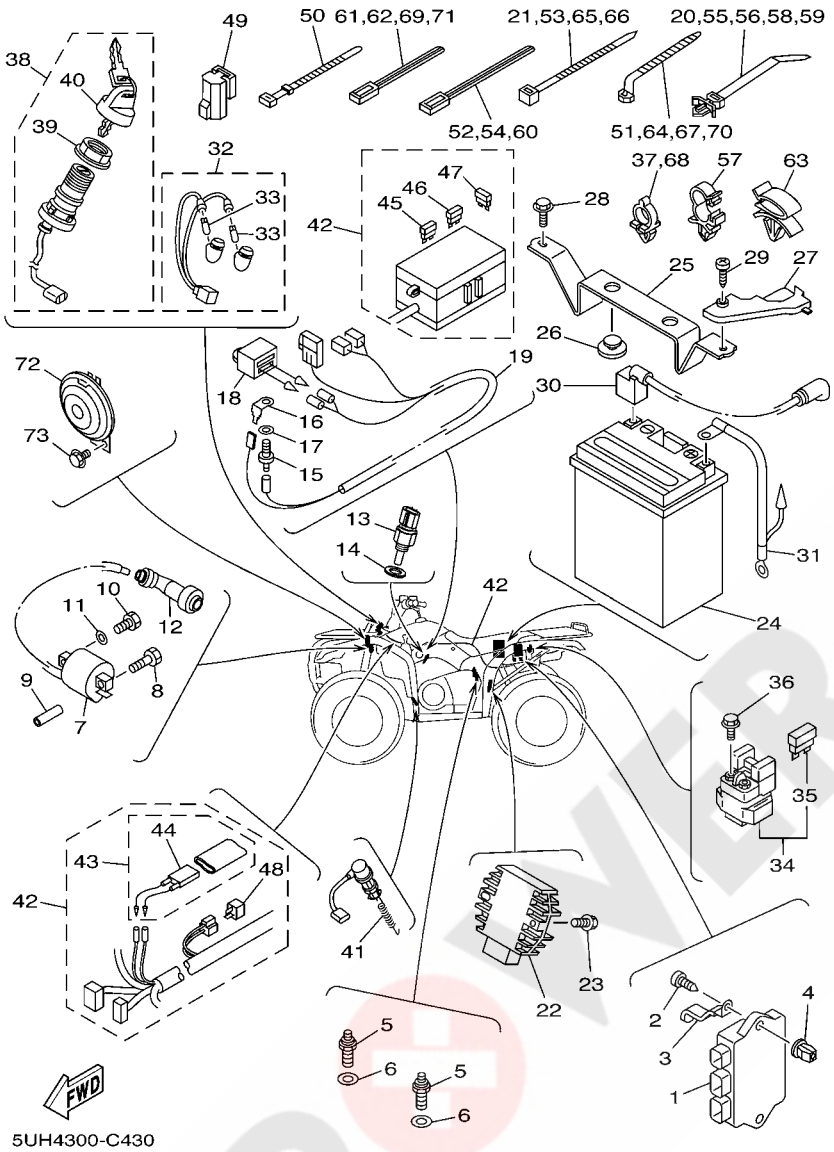

FIG. 43 ELECTRICAL 1

REF. NO.	PART NO.	DESCRIPTION	EUR	OCE				REMARKS
28	95807–06020	BOLT, FLANGE	2	2				
29	97707–60016	SCREW, TAPPING	1	1				
30	5TE–H2115–00	WIRE, PLUS LEAD	1	1				
31	5UH–H2116–00	WIRE, MINUS LEAD	1	1				
32	5UH–83530–00	PILOT LIGHT ASSY	1	1				
33	5GH–83516–00	.BULB (14V-1.7W)	2	2				
34	4SV–81940–12	STARTER RELAY ASSY	1	1				
35	1AE–82151–00	.FUSE (30A-BL)	2	2				
36	9502P–06008	BOLT, FLANGE	2	2				
37	90464–10833	CLAMP	2	2				
38	5LP–82510–00	MAIN SWITCH ASSY	1	1				
39	3HN–82569–00	.NUT, MAIN SWITCH	1	1				
40	3HN–82579–00	.CAP, KEY	1	1				
41	4KB–82530–10	STOP SWITCH ASSY	1	1				
42	5UH–82590–20	WIRE HARNESS ASSY	1	1				
43	5ND–82180–00	.CIRCUIT BREAKER ASSY	1	1				
44	5ND–82560–00	..THERMO SWITCH ASSY	1	1				
45	5JJ–82151–10	.FUSE (15A-BL)	2	2				
46	5JJ–82151–30	.FUSE (10A-BL)	4	4				
47	5JJ–82151–50	.FUSE (3A-BL)	2	2				
48	3WP–81980–00	.DIODE ASSY	1	1				
49	29U–81950–93	RELAY ASSY	1	1				
50	90464–51800	CLAMP	2	2				
51	90464–12830	CLAMP	1	1				
52	90464–40825	CLAMP	1	1				
53	90464–31827	CLAMP	4	4				
54	90464–40825	CLAMP	4	4				

POWER PARTS By KOUAD

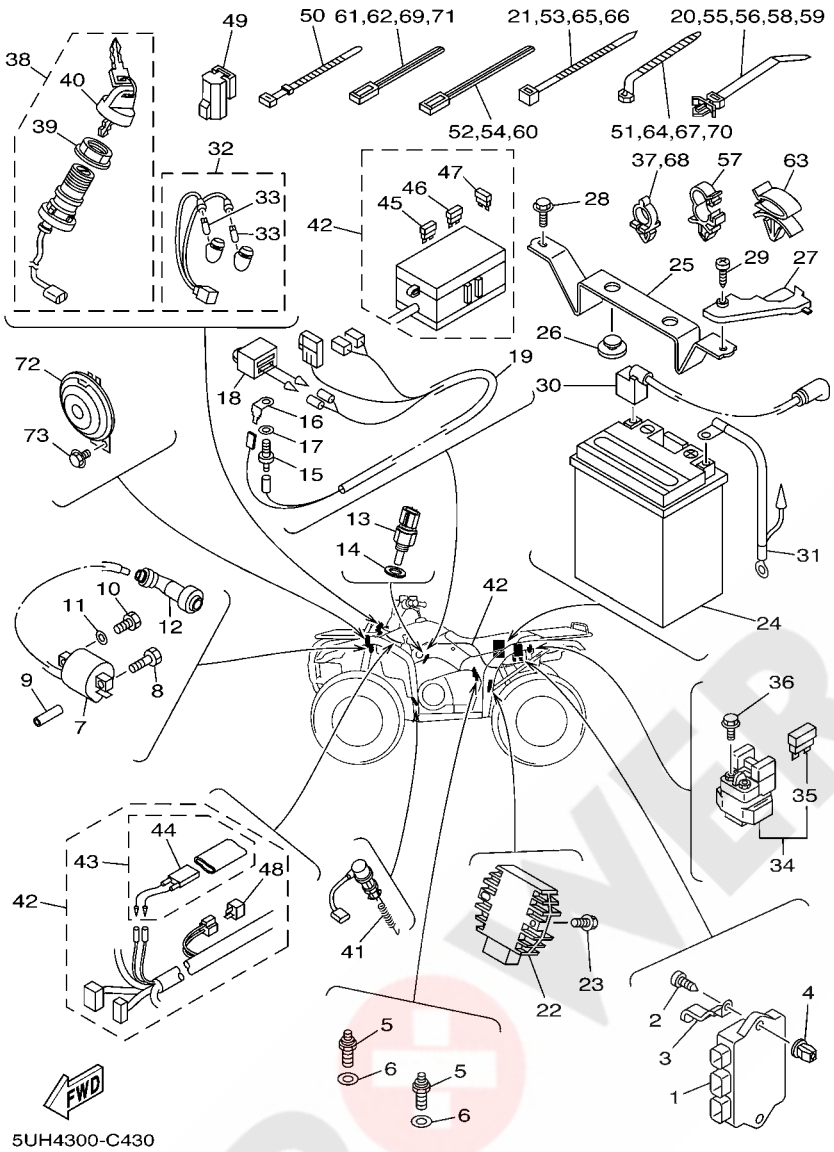

FIG. 43 ELECTRICAL 1

REF. NO.	PART NO.	DESCRIPTION	EUR	OCE				REMARKS
55	90464–25800	CLAMP	2	2				
56	90464–25800	CLAMP	3	3				
57	90464–16006	CLAMP	1	1				
58	90464–25800	CLAMP	1	1				
59	90464–25800	CLAMP	2	2				
60	90464–40825	CLAMP	3	3				
61	90464–48800	CLAMP	2	2				
62	90464–48800	CLAMP	1	1				
63	90464–10814	CLAMP	1	1				
64	90464–12830	CLAMP	1	1				
65	90464–31827	CLAMP	1	1				
66	90464–31827	CLAMP	2	2				
67	90464–12830	CLAMP	1	1				
68	90464–10833	CLAMP	2	2				
69	90464–48800	CLAMP	3	3				
70	90464–12830	CLAMP	1	1				
71	90464–48800	CLAMP	1	1				
72	4WV–83371–00	HORN	1	1				
73	95817–06012	BOLT, FLANGE	1	1				

POWER PARTS By 4x4QUAD

FIG. 44 ELECTRICAL 2

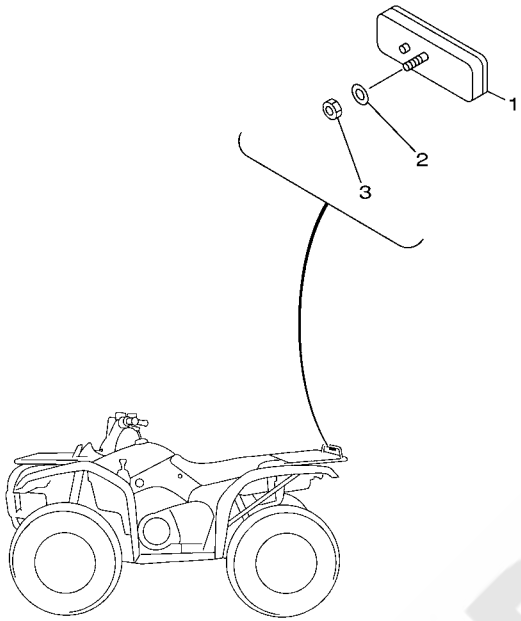

5UH8300-D440

REF. NO.	PART NO.	DESCRIPTION	EUR	OCE				REMARKS
1	3Y6–85130–02	REAR REFLECTOR ASSY	1					
2	92907–05200	WASHER	1					
3	95307–05600	NUT	1					

POWER PARTS By 4xQUAD

FIG. 45 EMBLEM & LABEL 1

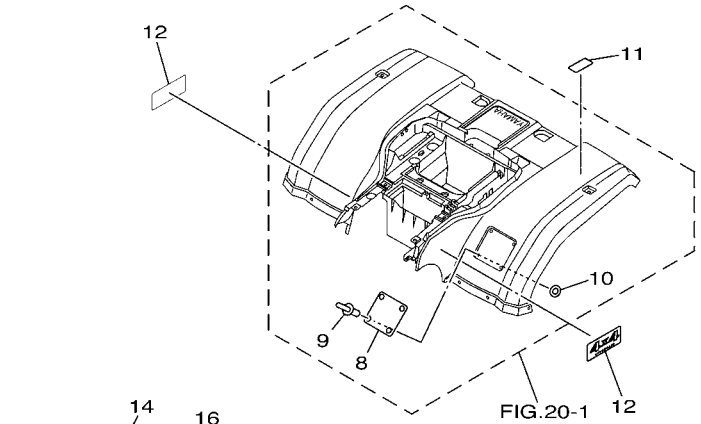

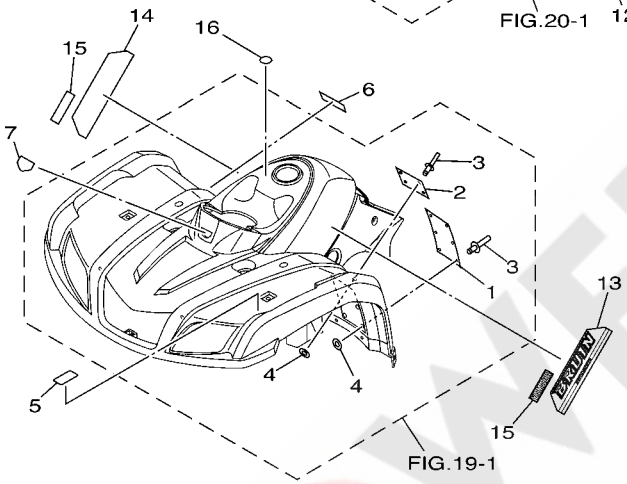

5UHD300-E450

REF. NO.	PART NO.	DESCRIPTION	EUR	OCE				REMARKS
1	4XE–F1568–50	LABEL, WARNING	1					
2	4XE–F415A–20	LABEL, CAUTION	1					
3	4XE–F1539–10	RIVET	10					
4	4XE–F1549–00	WASHER, FENDER MOLD	10					
5	5ND–F4877–20	LABEL, CAUTION	1					ENGLISH
6	5UH–F155A–00	MARK, CE	1					
7	5FU–F6232–00	EMBLEM 3D	1					
8	5ND–F1696–00	LABEL, CAUTION	1					
9	4XE–F1539–10	RIVET	4					
10	4XE–F1549–00	WASHER, FENDER MOLD	4					
11	5ND–F4897–20	EMBLEM	1					ENGLISH
12	5FU–F163G–C0	EMBLEM 1	2					
13	5UH–F1781–A0	EMBLEM 1	1					UR FOR RTR
	5UH–F1781–B0	EMBLEM 1	1					UR FOR PDG
	5UH–F1781–D0	EMBLEM 1	1					UR FOR DPBSE
14	5UH–F1782–A0	EMBLEM 2	1					UR FOR RTR
	5UH–F1782–B0	EMBLEM 2	1					UR FOR PDG
	5UH–F1782–D0	EMBLEM 2	1					UR FOR DPBSE
15	5UH–F173B–00	EMBLEM 3D	2					
16	4XE–F415E–10	LABEL, CAUTION	1					

POWER PARTS By 4xQUAD

FIG. 46 EMBLEM & LABEL 2

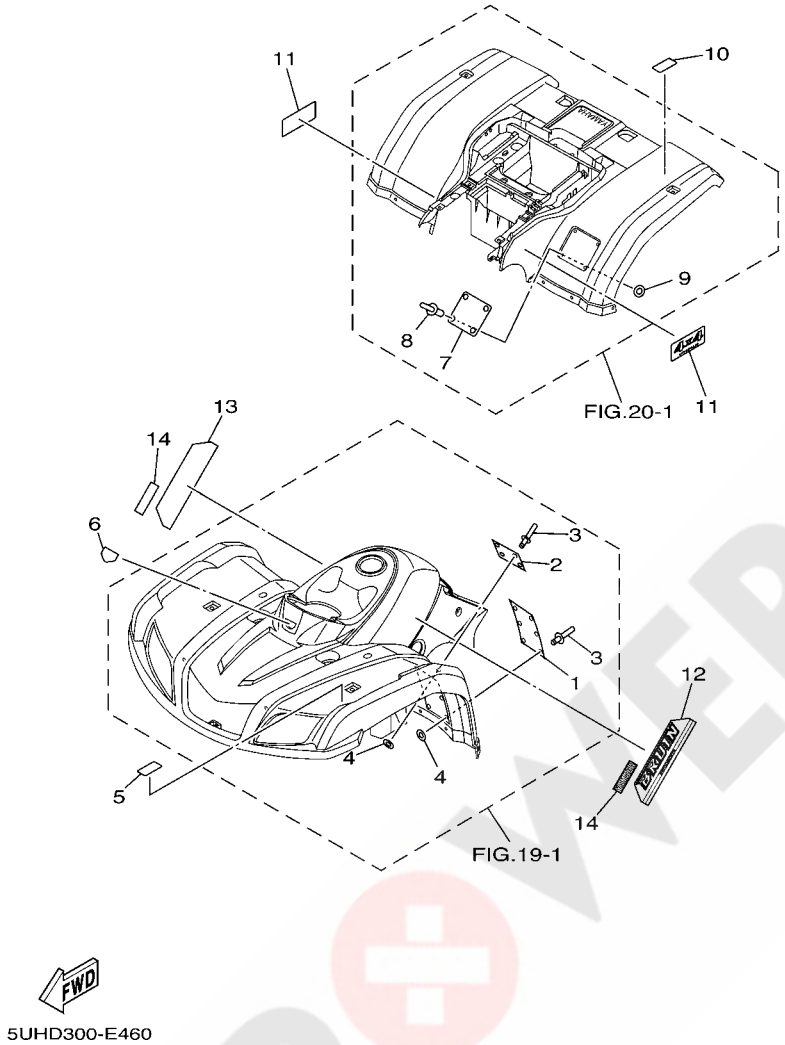

REF. NO.	PART NO.	DESCRIPTION	EUR	OCE				REMARKS
1	4XE–F1568–10	LABEL, WARNING		1				ENGLISH
2	4XE–F415A–00	LABEL, CAUTION		1				ENGLISH
3	4XE–F1539–10	RIVET		10				
4	4XE–F1549–00	WASHER, FENDER MOLD		10				
5	5ND–F4877–20	LABEL, CAUTION		1				ENGLISH
6	5FU–F6232–00	EMBLEM 3D		1				
7	5FU–F1696–00	LABEL, CAUTION		1				ENGLISH
8	4XE–F1539–10	RIVET		4				
9	4XE–F1549–00	WASHER, FENDER MOLD		4				
10	5ND–F4897–20	EMBLEM		1				ENGLISH
11	5FU–F163G–C0	EMBLEM 1		2				
12	5UH–F1781–D0	EMBLEM 1		1				
13	5UH–F1782–D0	EMBLEM 2		1				
14	5UH–F173B–00	EMBLEM 3D		2				

POWER PARTS By 4x4UAD

PART NO.	GRID NO.
5UH–11101–00	B – 2
3Y1–1111F–00	B – 2
3Y1–11127–00	B – 2
4X7–11127–00	B – 4
3Y1–11133–11	B – 2
4KB–11145–00	B – 8
4WU–11160–01	B – 2
4KB–11165–00	B – 2
1UY–11181–01	B – 2
2NL–11186–10	B – 2
2NL–11187–10	B – 2
214–11198–01	B – 14
	D – 4
	D – 8
5YT–11310–00	B – 4
4KB–11351–00	B – 4
5UH–11400–00	B – 5
5KM–11447–00	B – 5
5UH–11454–01	B – 6
5UH–11531–00	B – 6
5UH–11536–00	B – 5
5UH–11565–00	B – 5
4GB–11610–00	B – 5
4GB–11610–20	B – 5
4GB–11610–40	B – 5
5UH–11631–00–C0	B – 5
55V–11633–00	B – 5
5UH–11636–00	B – 5
5UH–11638–00	B – 5
5UH–11651–00	B – 5
30X–11681–00	B – 5
1UY–12111–01	B – 7
22U–12113–00	B – 7
1UY–12114–01	B – 7
3Y1–12116–00	B – 7
3Y1–12117–01	B – 7
1J7–12118–00	B – 7
1UY–12121–01	B – 7
M01–12129–00	B – 7
3GD–12151–11	B – 7
4SH–12156–00	B – 7
31G–12158–00	B – 7
31G–12159–02	B – 7
5UH–12170–00	B – 8
5UH–12176–00	B – 8
31G–12210–01	B – 8
3GD–12213–00	B – 8
31G–12214–00	B – 8

PART NO.	GRID NO.
31G–12222–00	B – 8
5UH–12231–00	B – 8
5UH–12241–00	B – 8
51Y–13132–50	B – 9
5UH–1319K–00	B – 9
5UH–13300–00	B – 9
5UH–13327–00	B – 9
5UH–13329–00	B – 9
5UH–13411–00	B – 9
5GH–13440–00	B – 9
5UH–13586–00	B – 10
5UH–14103–00	B – 12
5FU–14105–10	B – 11
4SV–14107–20	B – 11
5UH–1410A–00	B – 11
5DM–14112–00	B – 11
5DM–14141–42	B – 11
4KM–14142–17	B – 12
3H1–14147–00	B – 11
522–14161–00	B – 11
5FU–14167–00	B – 12
127–14186–00	B – 11
3FV–14191–00	B – 11
24W–14193–00	B – 10
4KB–14193–20	B – 11
5FU–14197–00	B – 12
3DM–14216–00	B – 12
4KM–14216–00	B – 11
1HX–14231–16	B – 11
3G2–1423A–62	B – 11
3G2–1423E–51	B – 11
5DM–14261–00	B – 11
5UH–14348–00	B – 12
31A–14419–00	B – 10
5BF–1443E–00	B – 15
	C – 15
583–14561–00	B – 11
5DM–14561–00	B – 11
1FN–14565–00	B – 12
3GD–14613–00	B – 13
5EL–1490H–00	B – 12
5UH–1490J–00	B – 11
5GH–14918–10	B – 11
5DM–14933–00	B – 11
4XE–14937–00	B – 12
5GH–14937–00	B – 12
5GH–14940–10	B – 11
256–14956–01	B – 12

PART NO.	GRID NO.
3H1–14962–00	B – 11
5DM–14985–00	B – 12
7T9–14987–00	B – 12
5UH–15100–00	B – 14
5UH–15113–00	B – 15
5UH–15163–00	C – 5
5UH–15315–00	B – 15
5UH–15317–00	B – 15
5KM–15351–00	B – 15
517–15362–02	B – 15
2N4–15371–00	D – 4
5UH–15379–00	B – 15
4WV–15381–00	B – 14
2K7–15383–00	B – 14
11H–15383–02	C – 8
5GH–15388–00	B – 14
5UH–15411–00	B – 15
5UH–15420–00	B – 15
5UH–15421–00	B – 15
5UH–15431–00	B – 15
5UH–15442–00	B – 14
5UH–15451–00	B – 15
5UH–15463–00	C – 5
5UH–15512–00	C – 4
5UH–15517–00	C – 4
1VJ–15521–00	C – 4
5KM–15590–00	C – 4
5UH–15710–00	C – 3
5UH–15713–00	C – 3
24W–15714–00	C – 3
21V–15715–01	C – 3
5UH–15716–00	C – 3
5KM–15723–00	C – 3
21V–15741–00	C – 3
21V–15751–00	C – 3
3X3–15755–00	C – 3
21V–15767–00	C – 3
21V–15779–00	C – 3
5UH–16181–00	B – 5
5UH–16611–00	C – 5
5UH–16620–00	C – 5
5UH–16626–00	C – 5
5GH–16664–00	C – 5
5UH–17168–00	C – 7
5UH–17223–10	C – 7
5UH–17285–00	C – 7
5UH–17421–10	C – 7
5UH–17453–00	C – 7

PART NO.	GRID NO.
5UH–17521–00	C – 8
5UH–17523–00	C – 7
4VR–17527–00	C – 9
5UH–17530–00	C – 8
5GH–17531–00	C – 8
5KM–17531–00	C – 8
5GH–17531–10	C – 8
5KM–17531–10	C – 8
5GH–17531–20	C – 8
5KM–17531–20	C – 8
5GH–17531–30	C – 8
5KM–17531–30	C – 8
5GH–17531–40	C – 8
5KM–17531–40	C – 8
5GH–17531–50	C – 9
5KM–17531–50	C – 8
5GH–17531–60	C – 9
5GH–17551–00	C – 8
5UH–17556–00	C – 8
5UH–17582–10	C – 7
5UH–17583–00	C – 7
5UH–17585–00	C – 9
5UH–17611–00	C – 5
5UH–1761A–00	C – 9
5UH–17620–00	C – 5
5UH–17623–00	C – 5
4WV–17632–00	C – 5
5UH–17639–00	C – 5
5UH–17641–00	C – 5
5UH–17644–00	C – 6
5UH–17645–00	C – 5
4WV–17653–00	C – 5
4WV–17654–01	C – 5
5UH–17660–00	C – 6
4CW–17664–00	C – 6
5UH–17670–00	C – 6
5UH–17681–10	C – 7
5UH–17684–00	C – 6
4WV–17811–00	E – 14
59V–17811–00	E – 14
4WV–17831–00	E – 14
4WV–17841–00	E – 14
5UH–18103–00	C – 10
5UH–18115–01	C – 10
5GH–18131–00	C – 10
5TE–18174–00	C – 10
5UH–18191–00	C – 10
4SH–18198–00	C – 10

PART NO.	GRID NO.
5UH–18300–01	C – 10
5GH–18318–00	D – 7
5GH–18319–00	D – 7
5UH–18511–00	C – 10
5GH–18514–01	D – 7
2A6–18535–00	C – 10
5GH–18617–00	C – 10
1W1–22128–00	D – 9
2HR–23526–00	D – 10
1UY–23812–00	D – 11
8K1–23814–00	D – 11
2GU–23872–00	C – 12
5KM–24500–01	D – 12
4X8–24512–00	D – 12
3AC–24523–00	D – 12
5GH–24524–00	D – 12
3AJ–24534–01	D – 12
5KM–24610–00	D – 12
5UH–2510F–00	D – 14
5UH–2510G–00	D – 14
5UH–2510H–00	D – 14
5UH–2510J–00	D – 14
3HN–2511G–01	D – 14
3HN–2511H–01	D – 14
5GT–2512A–00	D – 14
	E – 5
3HN–2512G–01	D – 14
2HR–2512H–00	D – 14
4KB–2512H–00	D – 14
2HR–2512J–00	D – 14
4SH–25367–01	E – 4
3GD–2580T–00	E – 3
3GD–2580U–00	E – 3
3GD–25827–00	E – 3
3GD–25828–00	E – 3
5KM–2583T–01	E – 8
5JX–25852–01	E – 8
4L0–25854–00	E – 8
2GU–25866–00	E – 8
5GH–25867–00	E – 8
1FK–2589F–00	E – 8
3GD–25933–00	E – 3
1NV–26129–00	E – 6
4WV–26250–10	E – 6
1NV–26259–01	E – 6
1NV–2625G–01	E – 6
1NV–2625K–00	E – 6
4KB–2628F–10	E – 6

PART NO.	GRID NO.
4KB–2628G–00	E – 6
1NV–26304–00	E – 6
5GH–26311–01	E – 6
5EB–26332–00	E – 8
5TE–26341–00	E – 6
20E–26343–00	E – 6
	E – 9
5TE–26361–00	E – 9
5GH–2637F–00	E – 9
1NV–26398–00	E – 6
109–27114–00	D – 3
1NV–2811A–01	C – 13
3HN–46108–01	D – 6
4WV–46119–01	D – 7
4WV–46119–11	D – 7
4WV–46119–21	D – 7
4WV–46119–31	D – 7
4WV–46119–41	D – 7
4WV–46119–51	D – 7
5GH–46123–00	D – 8
29U–46125–00	D – 4
5GH–46126–01	D – 8
4WV–46132–00	D – 7
5GH–46136–00	D – 8
5KM–46137–00	D – 8
5GH–46141–01	D – 7
4WV–46143–00	D – 7
4WV–46155–00	D – 7
4WV–46159–00	D – 7
5GH–46160–04	D – 7
5GH–46161–01	D – 7
5GH–46162–01	D – 7
4WV–46165–00	D – 7
4WV–46167–00	D – 7
5GH–4616A–02	D – 7
2HR–46187–00	D – 6
4WV–46441–00	D – 7
5GH–46470–03	D – 7
5UH–81410–00	E – 12
5UH–81450–00	E – 12
3AJ–81809–00	E – 13
3XF–81815–00	E – 13
3HE–81826–00	E – 13
4XV–8182A–00	E – 13
3HE–81830–00	E – 13
3HE–81840–00	E – 13
11H–81844–00	E – 13
1FK–81847–00	E – 13

PART NO.	GRID NO.
3HE–81850–00	E – 13
4G0–81871–00	E – 13
3HE–81890–00	E – 13
4SV–81940–12	F – 6
29U–81950–93	F – 6
5GT–81960–00	F – 5
3WP–81980–00	F – 6
5FU–82103–00	F – 5
371–82121–00	F – 5
1AE–82151–00	F – 6
5JJ–82151–10	F – 6
5JJ–82151–30	F – 6
5JJ–82151–50	F – 6
5ND–82180–00	F – 6
5KM–82310–00	F – 5
1UY–82370–20	F – 5
5TE–82509–00	F – 5
5LP–82510–00	F – 6
4KB–82530–10	F – 6
3GB–82540–01	F – 5
3GD–82540–11	D – 7
5ND–82560–00	F – 6
5FU–82560–20	F – 5
3HN–82569–00	F – 6
3HN–82579–00	F – 6
5UH–82590–20	F – 6
1YW–82911–02	F – 4
2XJ–82913–00	F – 4
4V4–82913–00	E – 6
4WV–83371–00	F – 7
5GH–83516–00	F – 6
2GV–83517–00	E – 14
3GM–83517–00	E – 14
42X–83517–00	E – 14
4R0–83517–00	E – 14
4X8–83524–00	E – 14
437–83525–00	E – 14
1M1–83526–00	E – 14
5UH–83530–00	F – 6
4SH–83536–00	E – 14
4SH–83536–10	E – 14
4SH–83570–00	E – 14
4SH–83570–10	E – 14
4GB–83591–10	F – 5
5FU–83790–00	F – 5
1UY–83909–00	F – 4
2HT–83912–00	F – 4
5KM–83922–00	E – 8

PART NO.	GRID NO.
5GH–83941–00	F – 4
3L4–83943–00	F – 4
1YW–83965–00	F – 4
5LP–83973–01	F – 4
4GB–83976–00	F – 4
4WV–83976–00	E – 6
5LP–83980–00	E – 8
3FA–83980–03	F – 4
2GU–84332–00	F – 2
2GU–84334–00	F – 2
5KM–84710–00	F – 3
1A2–84714–41	F – 3
5KM–8472C–10	F – 3
3Y6–85130–02	F – 8
5UH–85540–00	F – 5
5UH–E1166–00	B – 2
5UH–E2405–00	B – 9
5UH–E3464–00	B – 9
5UH–E3465–00	B – 9
5UH–E3480–00	B – 9
5UH–E3573–00	B – 9
5UH–E3577–00	B – 9
5UH–E4101–00	B – 11
5FU–E4147–00	B – 11
5FU–E4155–00	B – 12
5ND–E4191–00	C – 10
5UH–E4191–00	B – 10
5UH–E4349–00	B – 10
5UH–E4411–00	B – 10
5UH–E4412–00	B – 10
5UH–E4424–00	B – 10
5ND–E442F–00	B – 10
5ND–E4437–02	B – 10
5UH–E4438–00	B – 10
5UH–E4451–10	B – 10
5UH–E4453–00	B – 10
5UH–E4458–00	B – 10
5UH–E4462–00	B – 10
5UH–E4468–00	B – 10
5UH–E4611–00	B – 13
5UH–E4612–00	B – 13
5UH–E4628–00	B – 13
5UH–E4638–00	B – 13
5UH–E4711–00	B – 13
5ND–E4714–00	B – 13
5ND–E4715–00	B – 13
5UH–E4718–00	B – 13
5ND–E4719–00	B – 13

PART NO.	GRID NO.
5UH–E4728–00	B – 13
5ND–E4737–00	B – 13
5ND–E4752–00	B – 13
5ND–E4759–00	B – 13
5UH–E4769–10	B – 10
5ND–E4777–00	B – 13
5UH–E477K–00	B – 13
5UH–E477R–00	B – 13
5UH–E477T–00	B – 13
5ND–E4788–00	B – 13
5UH–E5336–00	C – 12
5UH–E5471–00	B – 15
5ND–E5472–00	C – 2
5ND–E5473–00	C – 2
5UH–E5474–00	C – 2
4XE–E7537–15	D – 4
4XE–E7537–30	D – 4
4XE–E7537–40	D – 4
4XE–E7537–45	D – 4
4XE–E7537–50	D – 5
4XE–E7537–60	D – 5
5UH–F1110–00	C – 12
5UH–F1315–00	C – 12
5UH–F1316–00	C – 12
4XE–F1399–00	E – 11
5ND–F1446–00	C – 12
5ND–F147A–01	C – 13
5ND–F1486–00	C – 12
5ND–F1488–00	C – 12
5UH–F1500–30	C – 14
5UH–F1500–40	C – 14
5UH–F1500–50	C – 14
5UH–F1500–60	C – 14
5ND–F151K–00	D – 3
4XE–F1539–10	F – 9
	F – 10
4XE–F1549–00	F – 9
	F – 10
5UH–F155A–00	F – 9
4XE–F1568–10	F – 10
4XE–F1568–50	F – 9
5ND–F1585–01	C – 12
5ND–F1600–30	C – 15
5ND–F1600–50	C – 15
5ND–F1600–60	C – 15
5ND–F1600–70	C – 15
5ND–F163A–00	C – 15
5ND–F163E–00	C – 15

PART NO.	GRID NO.
5ND–F163F–00	C – 15
5FU–F163G–C0	F – 9
	F – 10
5ND–F1652–00	C – 15
5FU–F1696–00	F – 10
5ND–F1696–00	F – 9
5UH–F171A–00	D – 2
5UH–F171A–10	D – 2
5UH–F171A–30	D – 2
5UH–F173B–00	F – 9
	F – 10
5ND–F174M–00	D – 2
5FU–F175B–01	C – 14
5UH–F1781–A0	F – 9
5UH–F1781–B0	F – 9
5UH–F1781–D0	F – 9
	F – 10
5UH–F1782–A0	F – 9
5UH–F1782–B0	F – 9
5UH–F1782–D0	F – 9
	F – 10
5ND–F2110–10	D – 3
5ND–F2123–00	D – 3
5ND–F2189–00	D – 3
4XE–F219X–00	D – 3
5UH–F2210–01	D – 9
5UH–F2825–00	C – 13
5ND–F3123–00	D – 10
5ND–F3192–00	E – 8
5UH–F3350–01	D – 10
5ND–F3501–10	D – 14
5ND–F3502–10	D – 15
5ND–F3540–11	D – 10
5FU–F3549–00	D – 10
	D – 14
5ND–F3550–11	D – 10
5ND–F357A–01	D – 10
5ND–F358A–01	D – 10
5ND–F3813–10	D – 11
5ND–F3816–11	D – 11
5ND–F3831–00	D – 11
4XE–F3833–00	D – 11
4XE–F3834–00	D – 11
1D9–F3841–00	D – 11
5ND–F3845–00	D – 11
5ND–F3868–00	D – 11
4XE–F3894–00	D – 11
5UH–F4110–00	D – 12

PART NO.	GRID NO.
5UH–F414H–00	D – 12
4XE–F415A–00	F – 10
4XE–F415A–20	F – 9
4XE–F415E–10	F – 9
5UH–F4311–00	D – 12
5UH–F470F–00	D – 13
5UH–F470F–20	D – 13
5UH–F4710–00	D – 13
5UH–F4710–20	D – 13
5UH–F4747–00	D – 13
5UH–F4776–00	D – 13
5UH–F478V–00	D – 13
5TE–F4841–01	E – 11
5ND–F4842–00	E – 11
5TE–F4842–10	E – 11
5ND–F4877–20	F – 9
	F – 10
5ND–F4897–20	F – 9
	F – 10
5ND–F5111–20	D – 14
5ND–F514A–00	E – 2
5ND–F5180–01	D – 14
5FU–F5319–00	E – 5
5FU–F531E–10	E – 5
5VH–F5321–00	E – 4
5FU–F5327–00	E – 5
5VH–F5333–00	E – 4
5FU–F5336–00	E – 5
5VH–F533A–00	E – 4
5VH–F5351–00	E – 4
5VH–F5355–00	E – 4
5VH–F5359–00	E – 5
5FU–F5377–10	E – 5
5FU–F537Y–00	E – 5
5TE–F5381–00	E – 5
5ND–F5383–10	E – 4
5FU–F5384–00	E – 5
5ND–F5390–01	E – 4
5VH–F539F–00	E – 5
5VH–F5818–00	E – 4
5ND–F582T–00	E – 3
5VH–F5833–00	E – 4
5ND–F5871–00	E – 8
5ND–F5872–00	E – 8
5ND–F5873–00	E – 8
5ND–F5875–00	E – 8
5VH–F5898–00	E – 4
5FU–F6111–10	E – 6

PART NO.	GRID NO.
5ND–F6124–00	E – 6
5FU–F6232–00	F – 9
	F – 10
5FU–F6241–10	E – 6
5VH–F6331–00	E – 6
5TE–F7211–00	E – 9
5TE–F7412–10	E – 9
5UH–F741A–00	E – 9
5ND–F7445–00	E – 9
5UH–F7445–00	E – 10
5ND–F7453–01	E – 9
5ND–F7463–01	E – 9
5ND–F7471–01	E – 9
5UH–F7491–00	E – 9
5ND–F8100–00	C – 13
5UH–F8309–00	C – 14
5UH–F8349–00	C – 14
5UH–F834L–00	E – 14
5UH–F837L–10	E – 14
5UH–F845N–00	E – 11
5ND–F8488–20	D – 3
5ND–F8488–30	D – 3
5ND–G6101–02	D – 4
4XE–G6102–00	D – 4
4XE–G6117–25	D – 5
4XE–G6117–30	D – 5
4XE–G6117–35	D – 5
4XE–G6117–40	D – 5
4XE–G6117–45	D – 5
4XE–G6117–50	D – 5
4XE–G6118–10	D – 5
4XE–G6118–11	D – 5
4XE–G6118–12	D – 5
4XE–G6118–13	D – 5
4XE–G6118–14	D – 5
4XE–G6118–15	D – 5
4XE–G6118–16	D – 5
4XE–G6118–17	D – 5
4XE–G6118–18	D – 5
4XE–G6118–19	D – 5
4XE–G6118–20	D – 5
4XE–G6118–21	D – 5
5ND–G6151–01	D – 4
5ND–G6152–00	D – 4
5FU–G6156–00	D – 4
5FU–G6157–10	D – 5
5FU–G6157–15	D – 5
5FU–G6157–20	D – 5

PART NO.	GRID NO.
5FU–G6157–30	D – 5
5FU–G6157–40	D – 5
5FU–G6157–50	D – 5
5ND–G6172–10	D – 6
5TE–G6173–10	D – 8
4XE–G6513–00	E – 5
5TE–G6540–11	D – 3
5UH–H1318–00	F – 5
5TE–H2100–00	F – 5
5TE–H2115–00	F – 6
5UH–H2116–00	F – 6
5ND–H2119–00	F – 5
5TE–H2128–01	F – 5
5UH–H252R–00	E – 14
5VH–H3550–00	E – 15
5FU–H4314–00	F – 2
5FU–H4320–00	F – 2
5FU–H4340–00	F – 2
8CR–W0041–00	E – 8
3GD–W0045–00	E – 3
3GD–W0047–00	E – 3
1UY–W0048–50	E – 3
3GD–W0057–00	E – 3
5UH–W1141–00	B – 5
5UH–W1142–00	B – 5
5VH–WF536–00	E – 4
5GT–Y4612–00	D – 4
90101–10303	B – 8
90101–10568	B – 5
90105–05361	B – 9
90105–06053	E – 14
90105–08892	E – 5
90105–088B2	E – 3
90105–10051	C – 12
90105–10055	C – 12
90105–10076	C – 12
90105–10421	B – 2
90105–10422	B – 2
90105–10751	E – 5
90105–10890	D – 10
90105–108B1	D – 10
90105–12660	D – 3
90105–12889	D – 9
90105–14367	C – 10
90109–06072	E – 9
90109–063F1	C – 13
90109–06576	F – 4
90109–06723	F – 5

PART NO.	GRID NO.
90110–06007	D – 2
90113–08004	D – 7
90114–10010	D – 14
90114–10804	E – 4
90116–06503	B – 2
90116–10840	D – 4
90119–06009	E – 10
90119–06060	C – 14
	C – 15
	E – 11
	E – 14
90119–06227	C – 15
90119–06831	D – 12
90119–08128	C – 9
90123–08046	F – 4
90149–04278	E – 6
90149–05299	D – 2
	E – 9
90149–06011	D – 12
90149–08152	C – 8
90149–08268	E – 3
90150–05802	F – 2
90151–06014	B – 14
90157–04088	C – 5
90170–08358	C – 10
90170–16326	B – 6
90170–36279	C – 6
90171–12816	D – 10
	D – 11
90171–16001	D – 15
	E – 5
90179–06668	B – 13
90179–08148	F – 4
90179–10540	D – 14
	E – 4
90179–16001	C – 6
90179–22005	C – 5
90179–22015	C – 8
90179–55660	C – 9
90179–65305	C – 8
90183–05008	F – 2
90183–05024	D – 2
90183–06053	C – 14
	D – 10
90183–08800	C – 14
90185–10844	D – 10
90185–12072	D – 9
90185–14070	C – 8

PART NO.	GRID NO.
90185–14070	D – 11
90201–047R9	C – 5
90201–05029	E – 9
90201–06008	C – 10
90201–06074	F – 3
90201–060L5	D – 12
90201–08016	F – 5
90201–08083	E – 9
90201–08085	B – 10
90201–10118	E – 8
90201–10128	B – 2
90201–101J1	C – 12
	E – 5
90201–10321	B – 5
90201–10591	B – 8
90201–106E0	B – 13
90201–108P8	D – 6
90201–12163	E – 14
90201–12172	B – 14
	F – 5
90201–127J6	D – 9
90201–132G5	C – 10
90201–14226	D – 11
90201–144J2	E – 9
90201–14633	C – 8
90201–15701	C – 10
90201–168R1	D – 15
	E – 5
90201–17013	C – 7
90201–190T7	C – 6
90201–20278	C – 7
90201–210U0	C – 7
90201–25290	C – 4
90202–05193	D – 12
90206–12001	B – 7
90209–06174	B – 9
90209–33253	B – 5
90215–06162	B – 2
90215–16258	B – 6
90240–08124	E – 9
90240–12092	D – 9
90249–12008	E – 7
	E – 9
90267–489U1	E – 10
90267–489U9	E – 9
90269–05055	C – 10
90269–06800	C – 2
90269–06804	C – 14

PART NO.	GRID NO.
90269–08813	C – 2
90280–05048	B – 5
90282–05013	B – 6
90336–28053	D – 11
90338–08226	F – 5
90338–09801	C – 15
90340–10001	D – 8
90340–14029	B – 14
	D – 4
	D – 8
90340–14046	D – 4
90340–14117	B – 15
90381–08002	E – 14
90387–060A7	B – 9
90387–0613B	C – 10
90387–066J1	D – 12
90387–07598	D – 12
90387–090R0	D – 11
90387–10636	B – 13
90387–16547	B – 4
90387–20013	B – 8
90387–252R2	C – 9
90387–255H9	D – 4
90387–284T0	E – 5
90388–10001	B – 15
90401–10159	E – 8
90401–20145	B – 9
90430–06192	B – 2
90430–10003	D – 8
90430–10148	F – 5
90430–14042	C – 10
90430–14043	B – 9
90430–14240	B – 2
90445–07807	E – 5
90445–07809	D – 8
90445–07810	D – 6
90445–088C5	D – 12
90446–16001	C – 10
90450–47001	B – 10
90450–56006	B – 10
90450–64002	C – 2
90460–58124	B – 10
90460–85277	D – 3
90461–08134	C – 2
90462–06016	F – 5
90464–10814	F – 7
90464–10833	F – 6
90464–12830	F – 6

PART NO.	GRID NO.
90464–16006	F – 7
90464–25800	F – 5
90464–31827	E – 15
	F – 5
90464–40825	F – 6
90464–48800	F – 7
90464–51800	F – 6
90465–08127	B – 15
90467–07029	D – 6
	D – 8
90467–07093	E – 5
90467–10008	D – 12
90467–14015	B – 2
90467–15012	C – 11
90467–16195	C – 2
	C – 15
90480–01400	D – 12
90480–10517	C – 13
90480–13018	B – 15
90480–15235	B – 9
90480–18290	D – 12
90501–101A7	B – 9
90501–10353	C – 10
90501–10782	E – 6
	E – 9
90501–22721	B – 5
90501–296L7	D – 8
90501–580A0	C – 6
90501–650L5	C – 9
90506–07135	D – 3
90506–12403	E – 10
90506–16482	E – 5
90508–35764	C – 10
90560–30325	D – 14
91317–05012	B – 15
	E – 12
91317–06020	B – 3
91317–06025	B – 2
91317–06030	B – 4
91317–08016	C – 4
91317–08020	D – 7
91317–08025	B – 10
91317–08050	B – 2
91401–20020	E – 9
91401–20025	D – 11
91401–25020	D – 10
	D – 11
	E – 5

PART NO.	GRID NO.
91401–30025	D – 9
91401–30030	D – 15
	E – 5
91A20–07014	B – 10
92902–04100	B – 12
92907–04600	B – 12
92907–05100	F – 4
92907–05200	F – 8
92907–05600	E – 6
92907–06100	F – 4
92907–06600	B – 8
	C – 3
	E – 12
	F – 5
93101–12168	B – 14
93101–31167	C – 5
93101–35097	C – 8
	E – 4
93101–38098	D – 4
93101–52116	D – 4
93102–08307	E – 14
93102–15212	C – 10
93102–24034	D – 8
93102–25081	C – 12
93102–25099	C – 12
93102–28476	B – 15
93102–30170	C – 9
93102–32483	C – 5
93102–35380	C – 9
93102–42004	C – 7
93102–50030	D – 8
93102–65386	D – 4
93104–09025	E – 6
93104–41119	C – 6
93106–38046	D – 14
93106–38047	D – 14
93106–47040	E – 4
93112–31011	D – 11
93210–08561	B – 9
93210–09165	B – 7
93210–14104	E – 15
93210–14299	C – 7
93210–14369	B – 15
93210–16290	C – 3
93210–17003	B – 8
	C – 7
93210–18322	B – 4
93210–19026	B – 15

PART NO.	GRID NO.
93210–24253	E – 14
93210–26606	E – 5
93210–27666	D – 14
93210–32172	E – 14
93210–44545	B – 10
	C – 6
93210–50768	D – 7
93210–57634	B – 2
93210–59531	D – 4
93210–64297	C – 13
93210–76800	D – 5
93210–78544	C – 8
93210–86509	B – 4
93211–06635	B – 2
93211–40040	D – 7
93211–51749	D – 4
93211–52001	C – 5
93306–00401	C – 7
93306–00502	B – 8
93306–00612	B – 6
	C – 9
93306–006Y2	D – 14
93306–008Y0	E – 4
93306–07801	B – 15
93306–20120	B – 14
93306–20306	C – 7
93306–203YN	C – 12
93306–20402	B – 6
93306–20464	C – 7
93306–20532	C – 8
93306–20582	C – 9
93306–20601	C – 7
93306–20715	C – 8
93306–278Y0	E – 4
93306–30538	C – 8
93306–305Y6	D – 4
93306–30611	B – 5
93310–420F2	C – 7
93310–633P5	B – 5
93311–42077	C – 7
93315–21813	C – 5
93315–32516	B – 8
93316–00801	D – 8
93316–01003	C – 5
93316–013Y0	D – 4
93317–855Y9	D – 4
93399–99926	D – 6
93410–20038	B – 8

PART NO.	GRID NO.
93410–22039	D – 6
93410–32826	D – 10
	D – 14
93410–46079	C – 5
93430–10015	E – 9
93440–12052	B – 2
93440–14155	C – 7
93440–15012	C – 10
93440–20088	D – 6
93440–25084	C – 7
93450–19095	B – 5
93450–22119	D – 14
93450–24062	C – 5
93450–44141	D – 8
93450–71142	D – 8
93503–08007	C – 10
93505–16006	B – 9
93603–14240	C – 7
93604–10011	B – 8
93605–10090	B – 5
93900–00813	D – 14
	E – 4
94108–12802	D – 14
94108–12803	D – 14
94110–12800	E – 4
94110–12801	E – 4
94591–54034	C – 7
94591–87110	B – 8
94701–00333	B – 3
95027–06012	B – 2
	B – 9
	B – 14
	C – 2
95027–06014	B – 2
95027–06025	B – 8
	B – 9
	E – 13
95027–06030	B – 15
	C – 5
95027–06050	B – 14
	B – 15
95027–06070	B – 14
95027–08045	B – 14
95027–12040	B – 14
9502P–06008	F – 6
95307–05600	F – 8
95307–05700	E – 6
95307–08700	C – 10

PART NO.	GRID NO.
95317–06700	E – 9
95606–06100	E – 8
95607–05100	E – 6
95607–06100	F – 4
95607–10200	C – 12
95607–12200	D – 3
9560L–06200	E – 4
95702–06500	C – 3
95707–05300	E – 9
95707–06300	F – 3
95707–10500	D – 3
	D – 6
95807–06012	D – 10
95807–06020	B – 9
	F – 5
95807–08012	D – 3
9580P–06035	B – 13
95817–06010	C – 13
95817–06012	F – 7
95817–06020	B – 13
95817–06025	E – 8
95817–06035	C – 10
95817–08030	C – 8
95817–10025	D – 4
95817–10080	C – 12
95817–10110	C – 12
9581P–06016	B – 13
9581P–08012	C – 12
	E – 9
	E – 11
9581P–08030	D – 11
9581P–10020	D – 3
95827–06012	B – 14
95827–06020	B – 15
95827–06030	B – 14
	B – 15
95827–08020	C – 13
95827–10040	B – 13
9582P–06012	E – 2
	E – 5
	E – 8
97007–06020	F – 5
97017–06012	B – 2
97017–06014	C – 3
97017–06020	E – 9
97027–06016	B – 8
9702P–08060	D – 11
9752P–08525	D – 4

PART NO.	GRID NO.
97607–04210	E – 6
97707–60016	F – 6
97707–60420	F – 5
98501–04014	B – 12
98507–03014	D – 12
98507–03540	F – 2
98507–04006	B – 11
98507–04008	B – 12
98507–04014	B – 11
98507–05010	E – 14
98507–05020	E – 6
98507–05030	F – 4
98507–06016	E – 14
98507–06020	F – 4
98507–06030	E – 12
	E – 15
98517–05012	F – 4
98580–04010	B – 11
98706–04012	E – 8
98707–04018	D – 12
99009–32400	B – 5
99009–80500	C – 5
99530–10116	B – 14
	B – 15
99530–14016	B – 2
	B – 4

PART NO.	GRID NO.

PART NO.	GRID NO.

POLYPARTS By ayaMA