YAMAHA

PARTS CATALOGUE

YFM70KDXG (B163) EUROPE

1RB16-300E1

( )

YAMAHA GENUINE Parts & Accessories

2018/9/25

NEWS NO.	DATE	COMMENT
PE0-MC-150067	Sep.,29,2015	MOD:YFM70K(2SM*/B16*/B32*)FIG.24,29 LIST REVISION
PE0-MC-150084	Oct.,20,2015	MOD:YFM70(B16*/B30*)FIG.19,21,39 or 41 LIST REVISION
PE0-MC-150107	Dec.,11,2015	COR:YFM700(B16,2SM,B32,B30,2UD,B31) FIG.9 INTAKE LIST/ILLUST. CORRECTION
PE0-MC-160037	Apr.,21,2016	MOD:YFM70(B16*/2SM*/B32*) ELECTRICAL 1 LIST REVISION
PE0-MC-180056	Aug.,28,2018	COR:YFM70K/70G FIG.10 THROTTLE BODY ASSY 1 LIST/ILLUST. CORRECTION

POWER PARTS By 4x4UAD

POWER PARTS By 4x4WAD

YFM70KDXG
PARTS CATALOGUE
©2015 by Yamaha Motor Co., Ltd.
1st edition, April 2015
All rights reserved.
Any reprinting or unauthorized use
without the written permission of
Yamaha Motor Co., Ltd.
is expressly prohibited.
Printed in Japan.

FOREWORD

This Parts Catalogue is related to the parts for the model(s) on the cover page. When you are ordering replacement parts, please refer to this Parts Catalogue and quote both part numbers and part names correctly.

1. Modifications or additions which have been made after the issue of the Parts Catalogue will be announced in the Parts News.
   It is advisable that you make the necessary corrections to the Parts Catalogue according to the Parts News.

2. Abbreviations
   The following abbreviations are used in this Parts Catalogue.

   “UR” Use specified parts number.
   “UN” Use as many as needed.
   “AP” Alternate Parts
   “LM” Locally Made (Parts need to be ordered locally)
   “F#” Frame No. (Applicable machine No.)
   “O/S” Over Size

3. The number of components for assembly
   - Parts, which are to be supplied in an assembly, are listed with a dot (.) in front of the part name as shown below.
   - The numeral appearing to the right of each component part indicates the quantity of parts for each assembly unit.

PART NO.	DESCRIPTION	Q’TY	REMARKS
2F5–83310–60	FRONT FLASHER LIGHT ASSY	2	
115–83311–60	.BULB (6V–18W)	1	

4. Applicable colours of graphics are represented in the “REMARKS” as shown below.

PART NO.	DESCRIPTION	Q’TY	REMARKS
2N4–24110–00–X5	FUEL TANK COMP.	2	MXR
3J1–24240–10	.GRAPHIC, FUEL TANK	1	FOR MXR

5. Note that the illustrations for reference in finding parts numbers are not to be used for assembling. When assembling, please use the applicable service manual.

6. The asterisk (*) before a reference number indicates modified items after the first edition.

POWER PARTS By 4x&4WD

7. Applicable Serial No.

Engine Serial No.

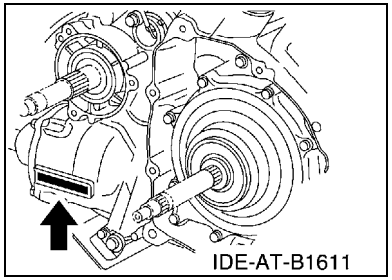

Frame Serial No.

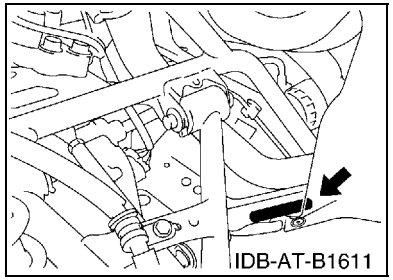

8. Applicable Colour Code (The (*) mark shows Model colour.)

Abbreviation	Colour Name	Colour Code
DPBSN(*)	DARK PURPLISH BLUE SOLID N	0891
PDG(*)	PASTEL DEEP GREEN	00K0

9. Quantity Column Information

Column No.	Name Of Q'ty Column	Destination
1	EUR	EUROPE

POWER PARTS By 4x4UAE

MODEL LABEL

(1) A label called “Model Label” is affixed in the location as indicated in (3) below.
When using this parts catalogue, please be sure to cross–reference the “model code – production code No.” in the catalogue with the “model code – production code No.” indicated on the Model Label affixed onto the product concerned.

(2) “Model Label” Indication

a	b
○ xxxx	– xxx
● x c	

a: Model Type Code
b: Production Code No.
c: Colouring Type

○ 4TW1–010
● A

(3) Model Label Affixing Location

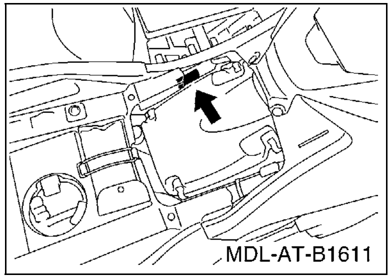

(4) Colouring Information

Model Code	Colouring Type Code	Colour Code	Colour Name	Abbrevia-tion
B163	B	00K0	PASTEL DEEP GREEN	PDG
	C	0891	DARK PURPLISH BLUE SOLID N	DPBSN

(5) Model Code – Production Code Number of Model Listed in This Parts Catalogue

Model Code	Production Code No.	Country (destination)
B163	010	FRANCE
		UNITED KINGDOM

Model Code	Production Code No.	Country (destination)

POWER PARTS

CONTENTS

ENGINE

CYLINDER HEAD 1
CYLINDER 3
CRANKSHAFT & PISTON 4
VALVE 6
CAMSHAFT & CHAIN 8
WATER PUMP 9
RADIATOR & HOSE 10
OIL PUMP 11
INTAKE 12
THROTTLE BODY ASSY 1 13
EXHAUST 14
CRANKCASE 16
CRANKCASE COVER 1 17
STARTER CLUTCH 19
CLUTCH 20
TRANSMISSION 22
MIDDLE DRIVE GEAR 24
SHIFT CAM & FORK 26
SHIFT SHAFT 28

CHASSIS

FRAME 30
FRONT FENDER 32
REAR FENDER 34
SIDE COVER 35
REAR ARM 37
REAR SUSPENSION 38
DRIVE SHAFT 39
FRONT DIFFERENTIAL 43
STEERING 45
FRONT SUSPENSION & WHEEL 47
FUEL TANK 48
SEAT 50
FRONT WHEEL 51
FRONT WHEEL 2 53
FRONT BRAKE CALIPER 55
REAR WHEEL 57
REAR WHEEL 2 59
STEERING HANDLE & CABLE 61
FRONT MASTER CYLINDER 62
STAND & FOOTREST 63
GUARD 65
GENERATOR 66
STARTING MOTOR 67
HEADLIGHT 68
TAILLIGHT 69
HANDLE SWITCH & LEVER 70
ELECTRICAL 1 71
GRAPHICS 74
EMBLEM & LABEL 1 75

INDEX

NUMERICAL INDEX 76

POWER PARTS By Akuma

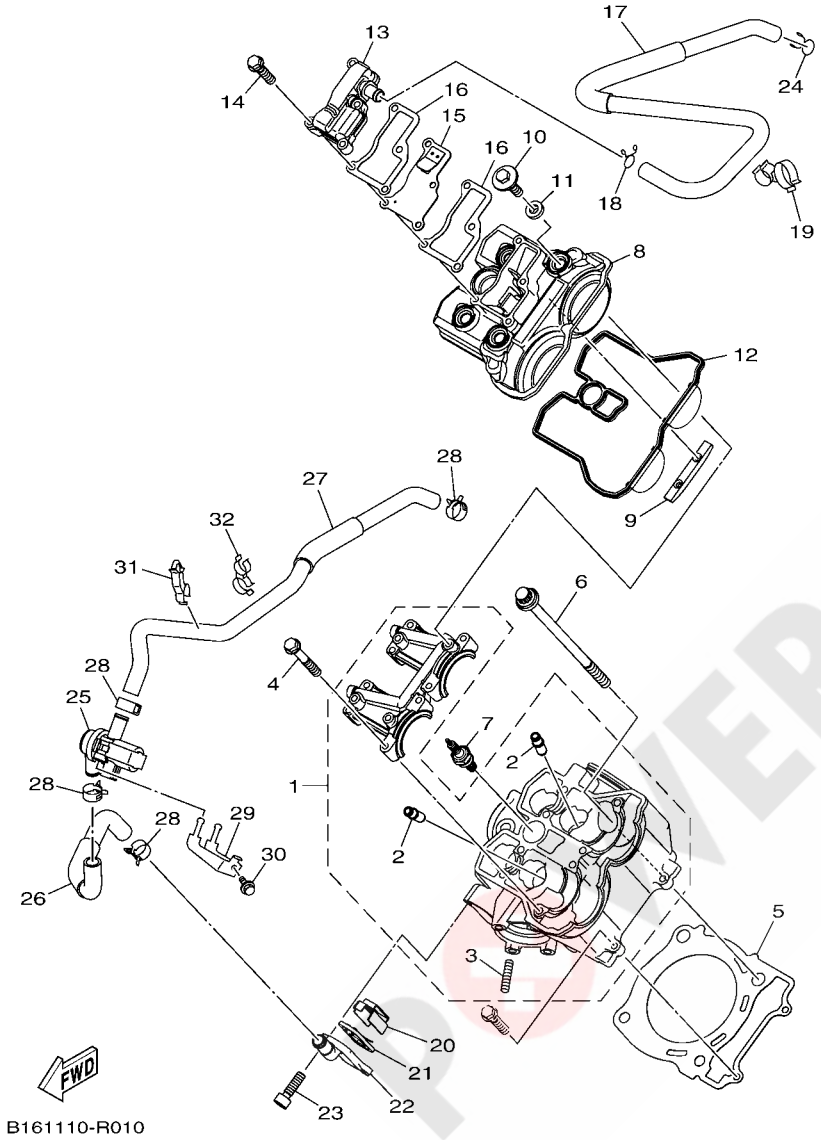

FIG. 1 CYLINDER HEAD

REF. NO.	PART NO.	DESCRIPTION	EUR					REMARKS
1	B16–E1102–00	CYLINDER HEAD ASSY	1					
2	2MB–E1133–10	.GUIDE, VALVE 1	4					
3	2MB–E1179–00	.BOLT, STUD	2					
4	2MB–E5481–80	BOLT 1	8					
5	2MB–E1181–00	GASKET, CYLINDER HEAD 1	1					
6	2MB–E1361–00	BOLT, CYLINDER HOLDING 1	4					
7	2MB–E119C–00	PLUG, SPARK (NGK CPR7EA)	1					
8	2MB–E1191–00	COVER, CYLINDER HEAD 1	1					
9	2MB–E2241–00	GUIDE, STOPPER 2	1					
10	2MB–E4446–00	BOLT	4					
11	2MB–E111G–00	RUBBER, MOUNT 1	4					
12	2MB–E1193–00	GASKET, HEAD COVER 1	1					
13	2MB–E1160–00	BREATHER ASSY	1					
14	2MB–E5481–20	BOLT 1	4					
15	2MB–E3610–00	REED VALVE ASSY	1					
16	2MB–E131B–00	GASKET, COVER	2					
17	B16–E1166–00	PIPE, BREATHER 1	1					
18	90467–140A4	CLIP	1					
19	90464–23002	CLAMP	1					
20	2MB–E482K–00	PLATE	1					
21	2MB–E4890–00	REED VALVE ASSY	1					
22	2MB–E4889–00	CAP, CASE	1					
23	2MB–E6777–10	BOLT	2					
24	90467–150A2	CLIP	1					
25	2MB–14840–00	AIR CUT VALVE ASSY	1					
26	2BG–E4882–00	HOSE, BEND 2	1					
27	B16–E4883–00	HOSE, BEND 3	1					

POWER PARTS By akawo

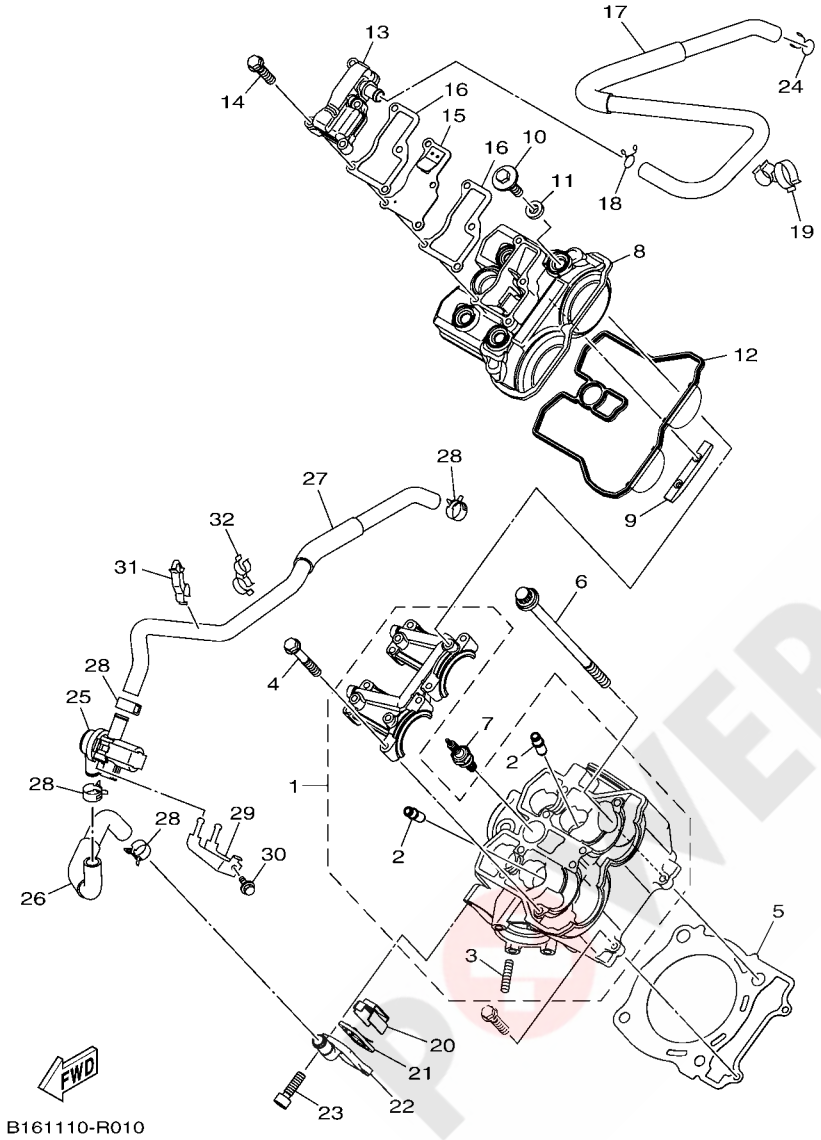

FIG. 1 CYLINDER HEAD

REF. NO.	PART NO.	DESCRIPTION	EUR					REMARKS
28	90467–17089	CLIP	4					
29	2BG–F117A–00	STAY	1					
30	95812–06012	BOLT, FLANGE	1					
31	90464–17006	CLAMP	1					
32	90464–18015	CLAMP	1					

POWER PARTS By 4X&4WD

FIG. 2 CYLINDER

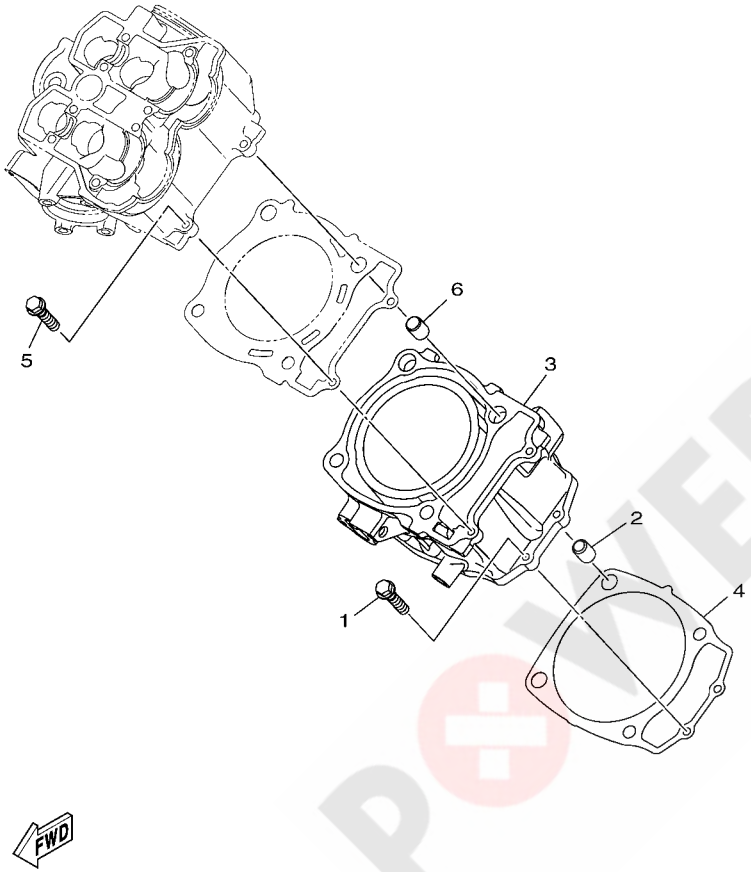

REF. NO.	PART NO.	DESCRIPTION	EUR					REMARKS
1	2MB–E5481–20	BOLT 1	2					
2	2MB–E5182–00	PIN, DOWEL	2					
3	2MB–E1311–00	CYLINDER 1	1					
4	2MB–E1351–00	GASKET, CYLINDER	1					
5	2MB–E5481–20	BOLT 1	2					
6	2MB–E5182–00	PIN, DOWEL	2					

POWER PARTS By 4x&4AD

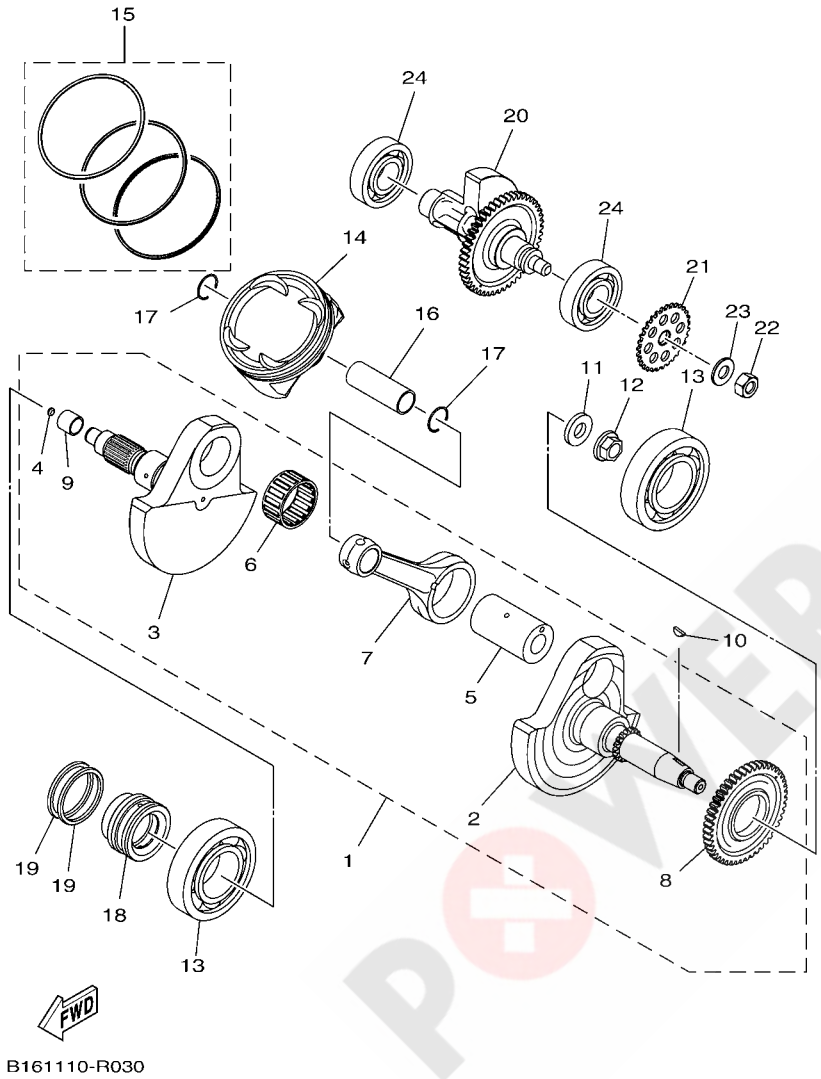

FIG. 3 CRANKSHAFT & PISTON

REF. NO.	PART NO.	DESCRIPTION	EUR					REMARKS
1	2MB–E1400–00	CRANKSHAFT ASSY	1					
2	2MB–E1412–10	.CRANK 1	1					
3	2MB–E1422–10	.CRANK 2	1					
4	2MB–E1446–00	.PLUG, CRANK	1					
5	2MB–E1681–10	.PIN, CRANK 1	1					
6	2MB–E1415–00	.BEARING ASSY 1	1					
7	2MB–E1651–10	.ROD, CONNECTING	1					
8	2MB–E1536–00	.GEAR, DRIVE	1					
9	2MB–G6122–00	.RACE, INNER	1					
10	2MB–E1545–00	KEY, WOODRUFF	1					
11	2MB–E1557–00	WASHER 1	1					
12	2MB–E1555–00	NUT, CRANKSHAFT 1	1					
13	2MB–E1425–00	BEARING ASSY 2	2					
14	2MB–E1631–00	PISTON (STD)	1					
	2MB–E1635–00	PISTON (0.25MM O/S)	1					AP
	2MB–E1636–00	PISTON (0.50MM O/S)	1					AP
15	2MB–E1603–00	PISTON RING SET (STD)	1					
	2MB–E1604–00	PISTON RING SET (0.25MM O/S)	1					AP
	2MB–E1605–00	PISTON RING SET (0.50MM O/S)	1					AP
16	2MB–E1633–00	PIN, PISTON	1					
17	2MB–E1634–00	CLIP, PISTON PIN	2					
18	2MB–E6181–00	SPACER 1	1					
19	2MB–E1447–00	SEAL, CRANK	2					
20	2MB–E1500–00	BALANCER ASSY	1					
21	2MB–E3354–00	SPROCKET, DRIVE	1					
22	2MB–E1459–00	NUT, SPECIAL	1					
23	2MB–E1483–00	WASHER, WEIGHT 1	1					

POWER PARTS By AKBAR

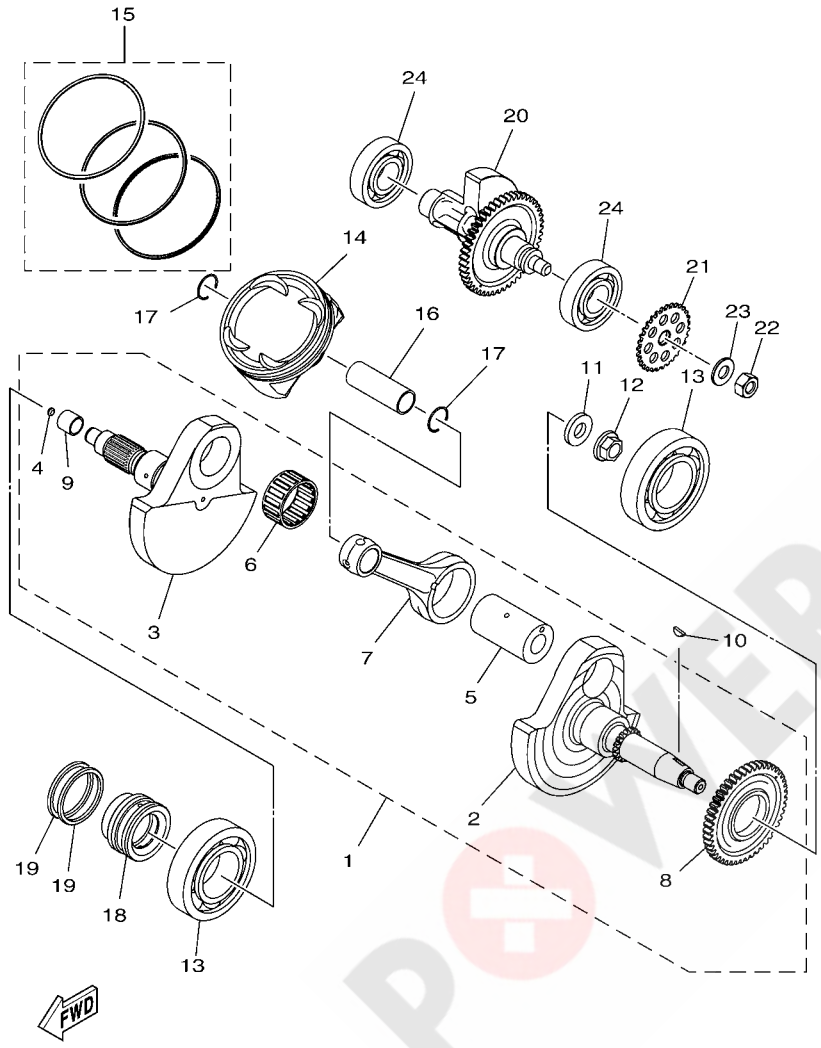

FIG. 3 CRANKSHAFT & PISTON

REF. NO.	PART NO.	DESCRIPTION	EUR					REMARKS
24	2MB–E1436–00	BEARING ASSY 3	2					

POWER PARTS By 4X4UAE

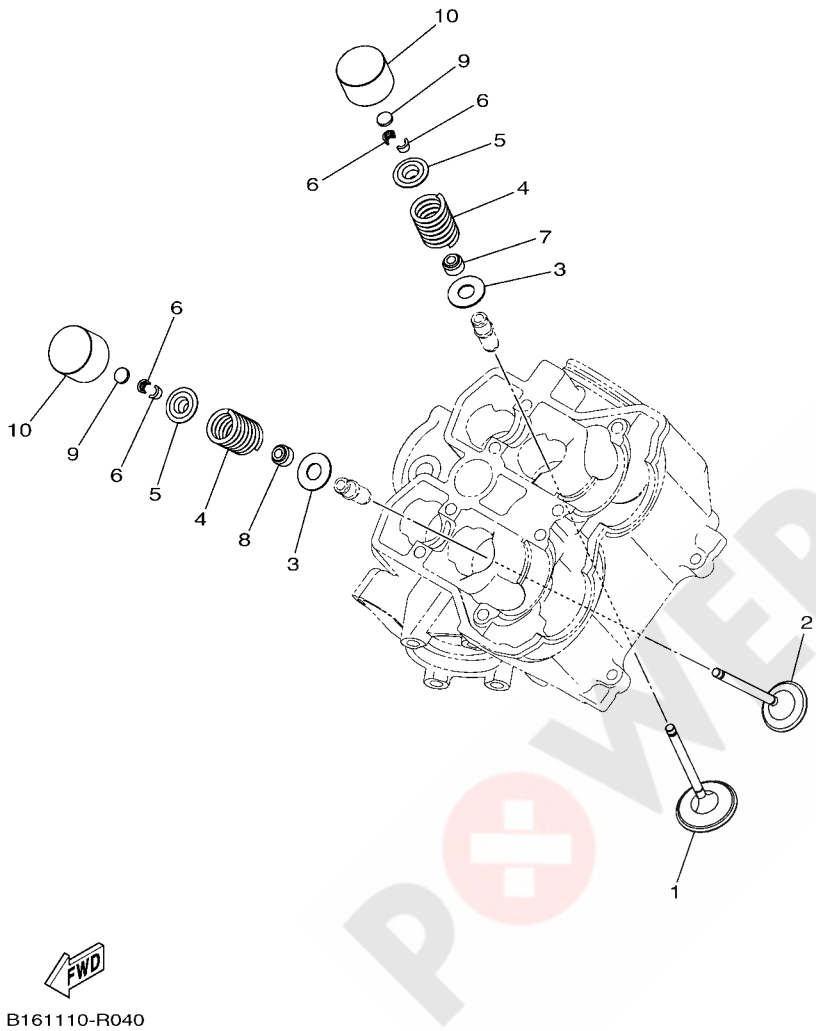

FIG. 4 VALVE

REF. NO.	PART NO.	DESCRIPTION	EUR					REMARKS
1	2MB–E2111–00	VALVE, INTAKE	2					
2	2MB–E2121–00	VALVE, EXHAUST	2					
3	2MB–E2126–00	SEAT, VALVE SPRING 2	4					
4	2MB–E2113–00	SPRING, VALVE INNER	4					
5	2MB–E2117–00	RETAINER, VALVE SPRING	4					
6	2MB–E2118–00	LOCK, VALVE SPRING RETAINER	8					
7	2MB–E2119–00	SEAL, VALVE STEM	2					
8	2MB–E2129–00	SEAL, VALVE STEM	2					
9	2MB–E2168–A0	PAD, ADJUSTING (T:1.450)	4					UR
	2MB–E2168–F0	PAD, ADJUSTING (T:1.500)	4					UR
	2MB–E2168–H0	PAD, ADJUSTING (T:1.550)	4					UR
	2MB–E2168–K0	PAD, ADJUSTING (T:1.600)	4					UR
	2MB–E2168–L0	PAD, ADJUSTING (T:1.625)	4					UR
	2MB–E2168–M0	PAD, ADJUSTING (T:1.650)	4					UR
	2MB–E2168–N0	PAD, ADJUSTING (T:1.675)	4					UR
	2MB–E2168–R0	PAD, ADJUSTING (T:1.700)	4					UR
	2MB–E2168–T0	PAD, ADJUSTING (T:1.725)	4					UR
	2MB–E2168–U0	PAD, ADJUSTING (T:1.750)	4					UR
	2MB–E2168–V0	PAD, ADJUSTING (T:1.775)	4					UR
	2MB–E2168–W0	PAD, ADJUSTING (T:1.800)	4					UR
	2MB–E2168–X0	PAD, ADJUSTING (T:1.825)	4					UR
	2MB–E2168–Y0	PAD, ADJUSTING (T:1.850)	4					UR
	2MB–E2169–00	PAD, ADJUSTING (T:1.875)	4					UR
	2MB–E2169–10	PAD, ADJUSTING (T:1.900)	4					UR
	2MB–E2169–20	PAD, ADJUSTING (T:1.925)	4					UR
	2MB–E2169–30	PAD, ADJUSTING (T:1.950)	4					UR
	2MB–E2169–40	PAD, ADJUSTING (T:1.975)	4					UR

POWER PARTS By Akaw

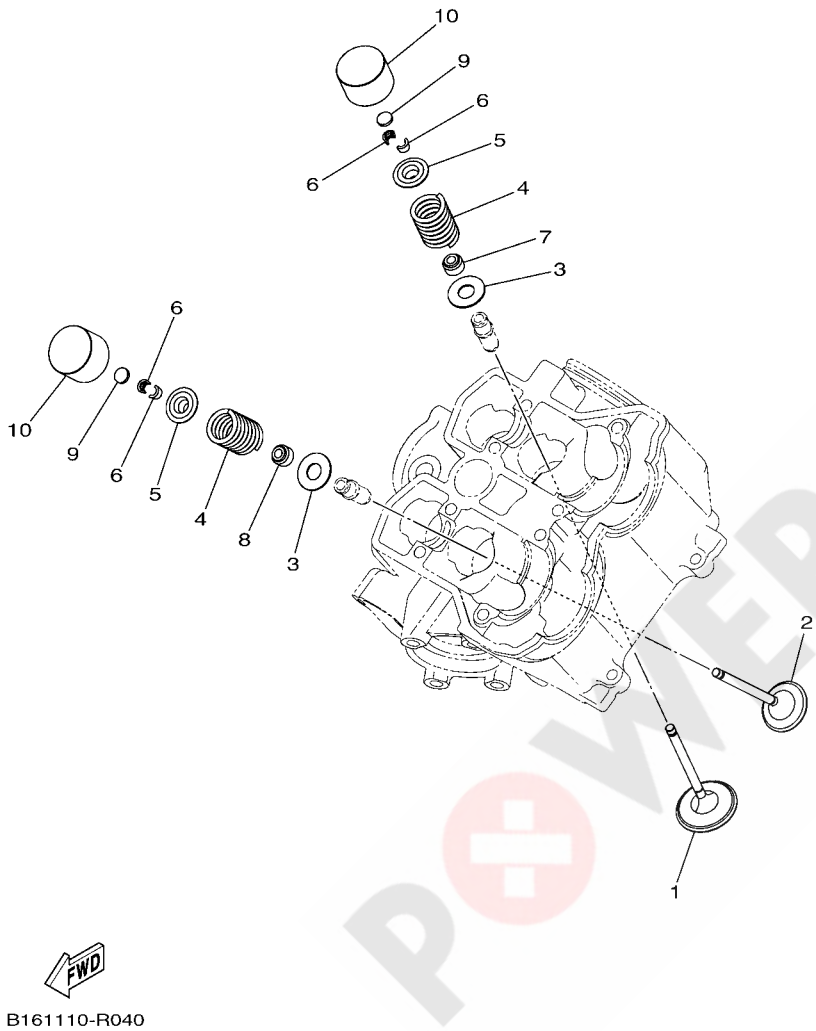

FIG. 4 VALVE

REF. NO.	PART NO.	DESCRIPTION	EUR					REMARKS
9	2MB–E2169–50	PAD, ADJUSTING (T:2.000)	4					UR
	2MB–E2169–60	PAD, ADJUSTING (T:2.025)	4					UR
	2MB–E2169–70	PAD, ADJUSTING (T:2.050)	4					UR
	2MB–E2169–80	PAD, ADJUSTING (T:2.075)	4					UR
	2MB–E2169–90	PAD, ADJUSTING (T:2.100)	4					UR
	2MB–E2169–A0	PAD, ADJUSTING (T:2.125)	4					UR
	2MB–E2169–E0	PAD, ADJUSTING (T:2.150)	4					UR
	2MB–E2169–G0	PAD, ADJUSTING (T:2.200)	4					UR
	2MB–E2169–J0	PAD, ADJUSTING (T:2.250)	4					UR
	2MB–E2169–L0	PAD, ADJUSTING (T:2.300)	4					UR
10	2MB–E2153–00	LIFTER, VALVE	4					

POWER PARTS

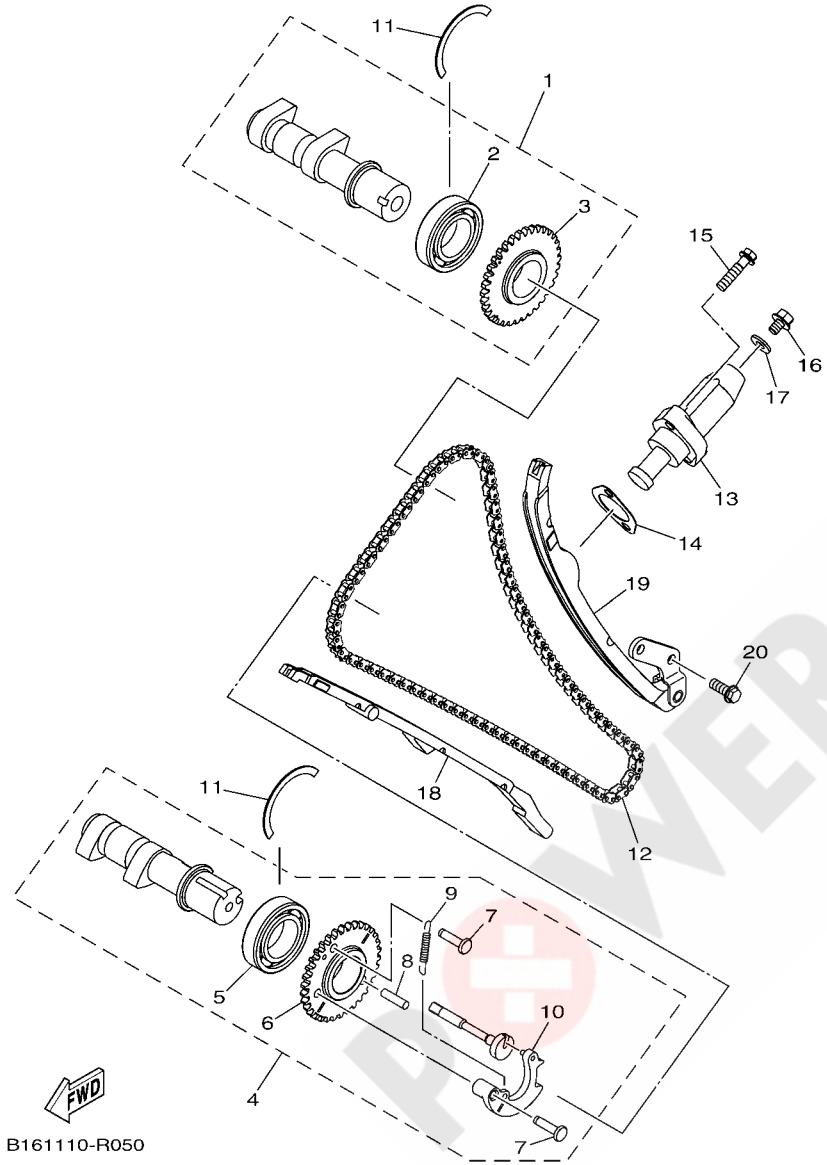

FIG. 5 CAMSHAFT & CHAIN

REF. NO.	PART NO.	DESCRIPTION	EUR					REMARKS
1	2MB–E2170–00	CAMSHAFT ASSY 1	1					
2	2MB–E2179–00	.BEARING, CAMSHAFT 1	1					
3	2MB–E2176–00	.SPROCKET, CAM CHAIN	1					
4	2MB–E2180–00	CAMSHAFT ASSY 2	1					
5	2MB–E2179–00	.BEARING, CAMSHAFT 1	1					
6	2MB–E2177–00	.SPROCKET, CAM CHAIN	1					
7	2MB–H431W–00	.PIVOT	2					
8	2MB–E2284–00	.PIN, DECOMPRESSION LEVER	1					
9	2MB–E2287–00	.SPRING, DECOMPRESSION	1					
10	2MB–E217A–00	.WEIGHT	1					
11	2MB–E2842–00	CIRCLIP	2					
12	2MB–E2190–00	CHAIN ASSY	1					
13	2MB–E2210–00	TENSIONER ASSY, CAM CHAIN	1					
14	2MB–E2213–00	GASKET, TENSIONER CASE	1					
15	2MB–E5481–20	BOLT 1	2					
16	2MB–E5481–00	BOLT 1	1					
17	2MB–E21E2–00	GASKET	1					
18	2MB–E2251–00	DAMPER, CHAIN 1	1					
19	2MB–E2252–00	DAMPER, CHAIN 2	1					
20	2MB–E5482–00	BOLT 2	2					

POWER PARTS By AKAMO

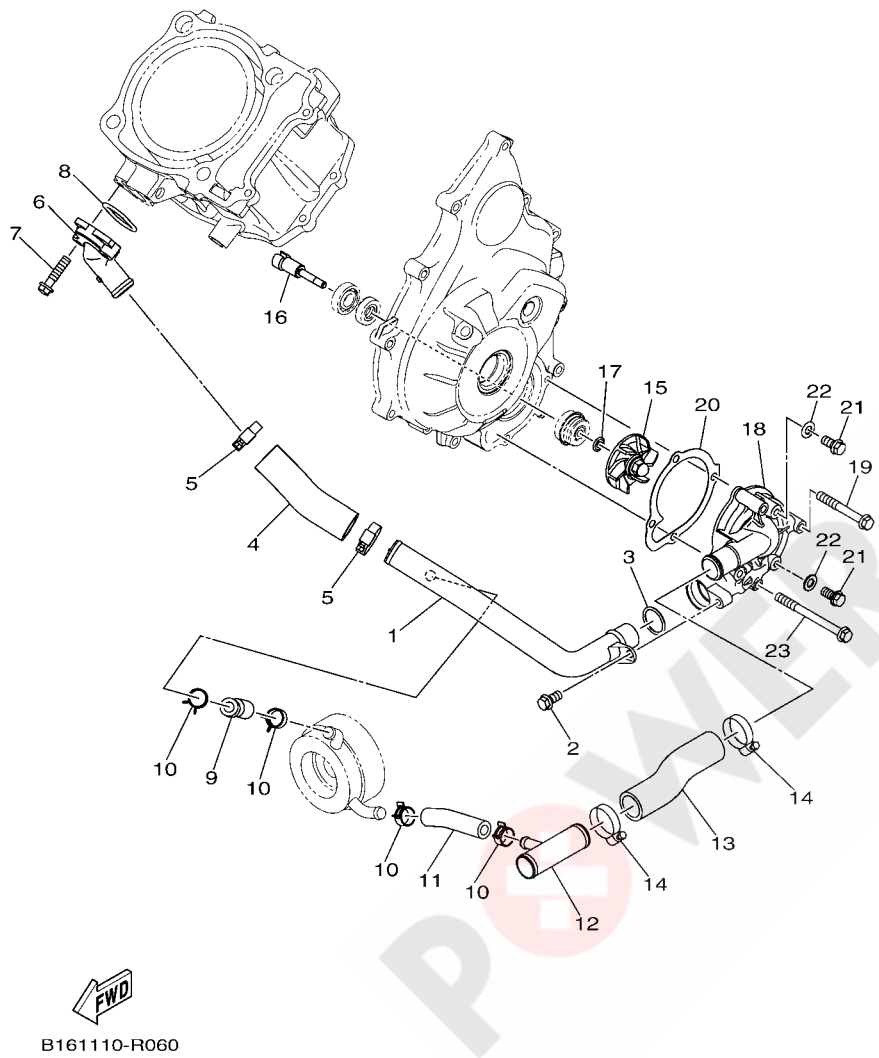

FIG. 6 WATER PUMP

REF. NO.	PART NO.	DESCRIPTION	EUR					REMARKS
1	B16–E2481–00	PIPE 1	1					
2	2MB–E5481–60	BOLT 1	1					
3	2MB–E2439–00	O-RING	1					
4	B16–E243F–00	HOSE,3	1					
5	2MB–E1387–00	CLAMP, HOSE 1	2					
6	2MB–E2469–00	JOINT 1	1					
7	2MB–E5481–20	BOLT 1	2					
8	2MB–E2843–00	O-RING	1					
9	B16–E244G–00	HOSE, 4	1					
10	B16–E2486–00	CLIP	4					
11	B16–E243E–00	HOSE 2	1					
12	B16–E2484–00	PIPE 4	1					
13	B16–E244J–00	HOSE 6	1					
14	2MB–E1387–00	CLAMP, HOSE 1	2					
15	2MB–E2451–00	IMPELLER, WATER PUMP	1					
16	2MB–E2458–00	SHAFT, IMPELLER	1					
17	2MB–E243M–00	SEAL, WATER PUMP	1					
18	B16–E2422–00	COVER, HOUSING	1					
19	2MB–E5481–B0	BOLT 1	3					
20	2MB–E2428–00	GASKET, HOUSING COVER 2	1					
21	2MB–E5481–60	BOLT 1	2					
22	2MB–E2435–00	GASKET	2					
23	2MB–E5481–70	BOLT 1	1					

POWER PARTS By 4x4UAD

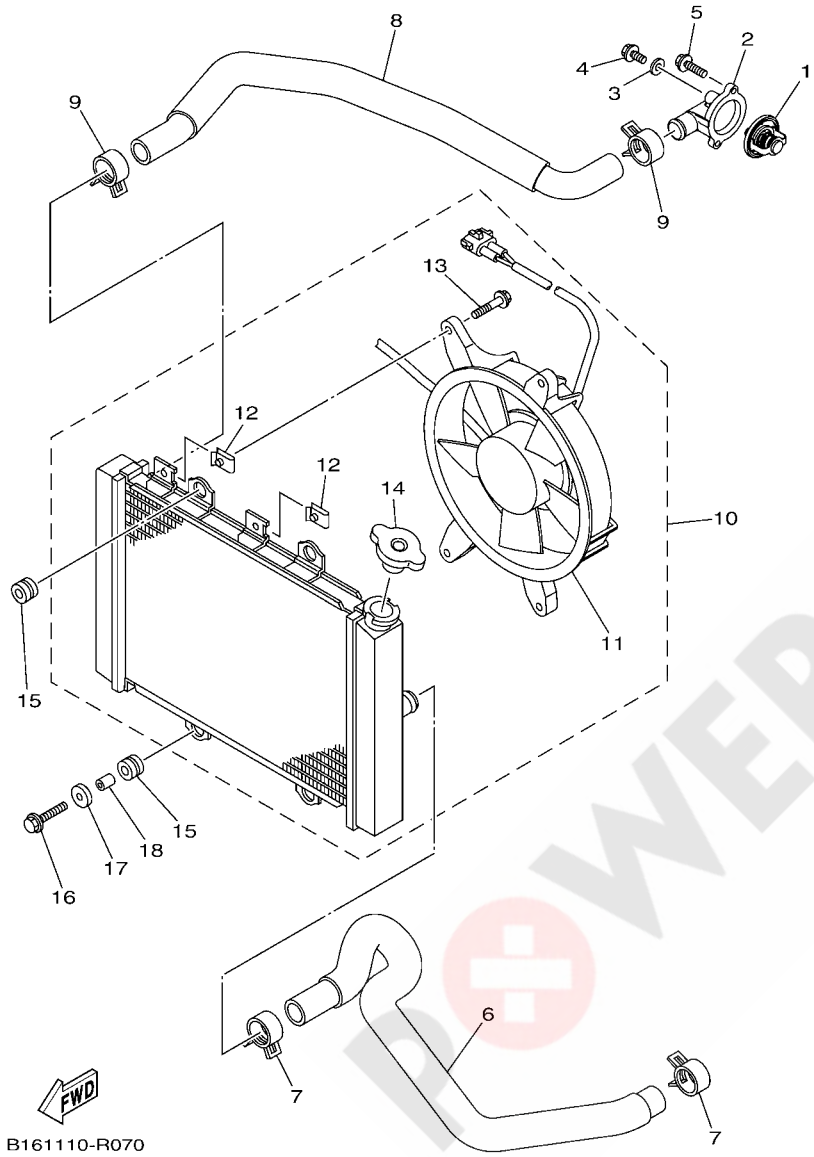

FIG. 7 RADIATOR & HOSE

REF. NO.	PART NO.	DESCRIPTION	EUR					REMARKS
1	2MB–E2411–00	THERMOSTAT	1					
2	B16–E2413–00	COVER, THERMOSTAT	1					
3	2MB–E2435–00	GASKET	1					
4	2MB–E5481–60	BOLT 1	1					
5	2MB–E5481–10	BOLT 1	2					
6	B16–E2576–00	HOSE 1	1					
7	90467–26189	CLIP	2					
8	B16–E2578–00	HOSE 3	1					
9	90467–26189	CLIP	2					
10	B16–E2460–00	RADIATOR ASSY	1					
11	B16–E2405–00	.BLOWER ASSY	1					
12	1HP–E2535–00	.NUT SPRING	4					
13	1HP–E2675–00	.BOLT, BLOWER HOLDING	4					
14	1XD–E2462–00	.CAP, RADIATOR	1					
15	90480–15235	GROMMET	4					
16	95812–06020	BOLT, FLANGE	2					
17	90209–06012	WASHER	2					
18	90387–06113	COLLAR	2					

POWER PARTS By AKBAR

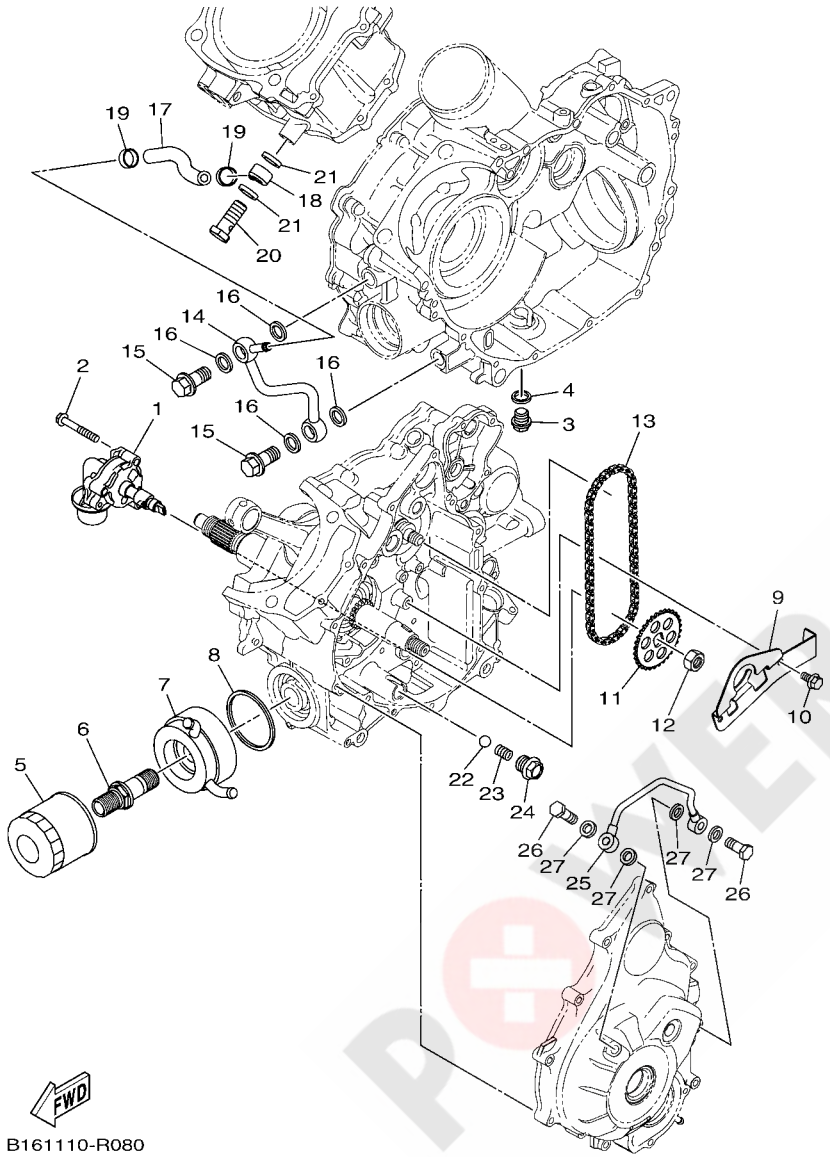

FIG. 8 OIL PUMP

REF. NO.	PART NO.	DESCRIPTION	EUR					REMARKS
1	2MB–E3300–00	OIL PUMP ASSY	1					
2	2MB–E5481–30	BOLT 1	3					
3	2MB–E8149–00	PLUG, BLIND	1					
4	2MB–E1198–00	GASKET	1					
5	B16–E3440–00	ELEMENT ASSY, OIL CLEANER	1					
6	B16–E3573–00	BOLT 1	1					
7	B16–E3470–00	OIL COOLER ASSY	1					
8	B16–E3475–00	GASKET	1					
9	2MB–E2221–00	GUIDE, STOPPER 3	1					
10	2MB–E5481–40	BOLT 1	2					
11	2MB–E3355–00	SPROCKET, DRIVEN	1					
12	2MB–E1459–00	NUT, SPECIAL	1					
13	2MB–E1456–00	CHAIN, PRIMARY	1					
14	2MB–E3171–00	PIPE, DELIVERY 2	1					
15	2MB–E3165–00	BOLT, BANJO	2					
16	2MB–E8363–00	GASKET	4					
17	2MB–E316F–00	HOSE, OIL 1	1					
18	2MB–E3181–00	PIPE, DELIVERY 3	1					
19	2MB–E5485–00	CLAMP	2					
20	2MB–E3166–00	BOLT, BANJO	1					
21	2MB–E1195–00	GASKET	2					
22	2MB–E8218–00	BALL	1					
23	2MB–E3469–00	SPRING	1					
24	2MB–E3455–00	PLUG	1					
25	2MB–E3161–00	PIPE, DELIVERY 1	1					
26	2MB–E2858–00	BOLT, UNION	2					
27	2MB–E3476–00	GASKET	4					

POWER PARTS By 4x4WD

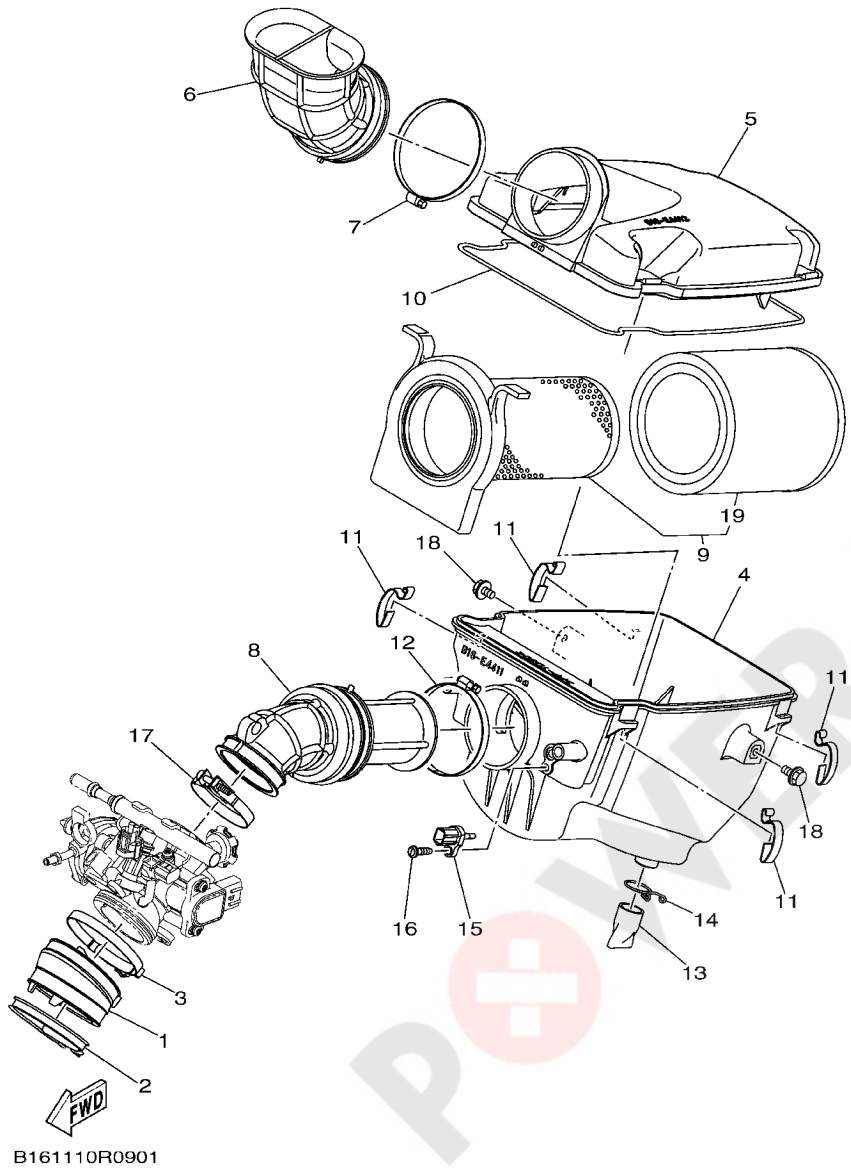

FIG. 9 INTAKE

REF. NO.	PART NO.	DESCRIPTION	EUR					REMARKS
1	2MB–E3586–00	JOINT, CARBURETOR 1	1					
2	2MB–E1388–00	CLAMP, HOSE 2	1					
3	90450–72004	HOSE CLAMP ASSY	1					
4	B16–E4411–00	CASE, AIR CLEANER 1	1					
5	B16–E4412–00	CAP, CLEANER CASE 1	1					
6	B16–E4437–10	DUCT	1					
7	B16–E4455–00	BAND	1					
8	B16–E4453–00	JOINT, AIR CLEANER 1	1					
9	B16–E4450–00	ELEMENT ASSY, AIR CLEANER	1					
10	B16–E4457–00	SEAL	1					
11	B16–E4424–00	CLIP, CAP FITTING	4					
12	B16–E4456–00	BAND	1					
13	B16–E443E–00	PIPE, DRAIN	1					
14	90467–220A1	CLIP	1					
15	8FP–85886–00	SENSOR, AIR TEMPERATURE	1					
16	97702–50520	SCREW, TAPPING	1					
17	90450–59009	HOSE CLAMP ASSY	1					
18	95812–06010	BOLT, FLANGE	2					
19	B16–E4451–00	.ELEMENT, AIR CLEANER	1					

POWER PARTS By AKAMO

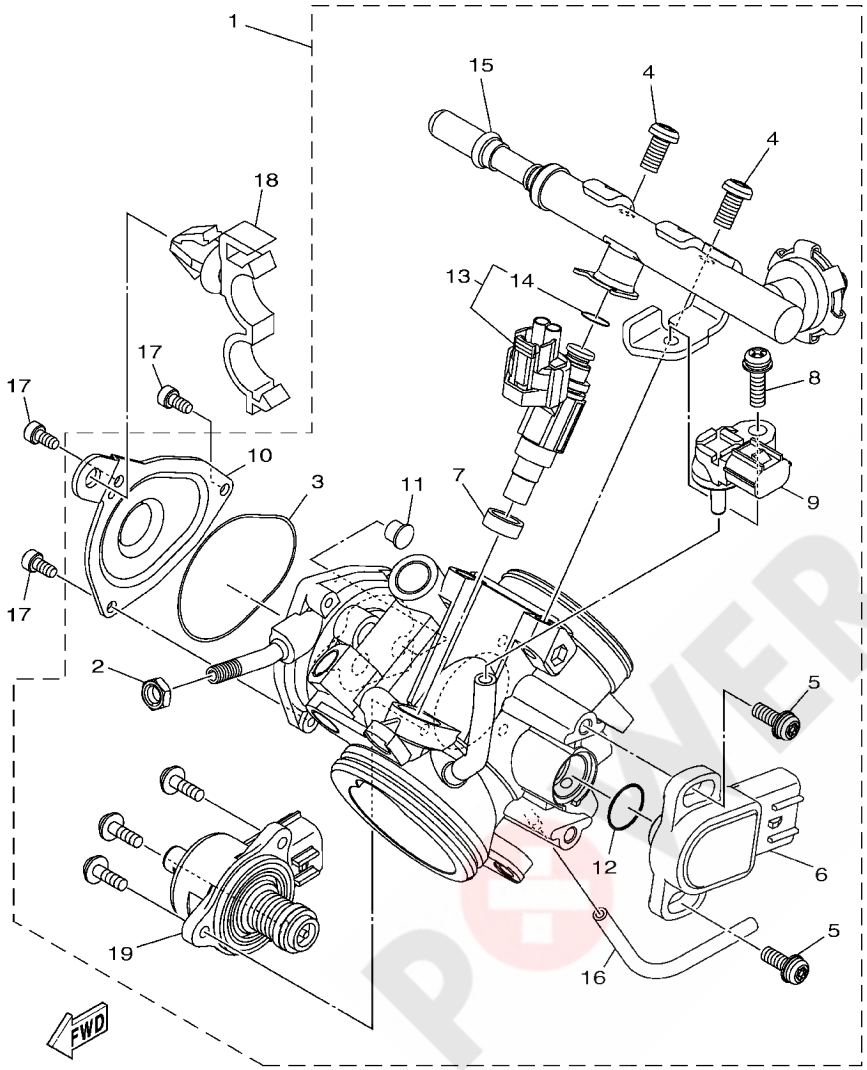

FIG. 10 THROTTLE BODY ASSY 1

REF. NO.	PART NO.	DESCRIPTION	EUR					REMARKS
1	B16–13750–00	THROTTLE BODY ASSY	1					
2	1S3–14161–00	.NUT, CABLE ADJUSTING	1					
3	5LP–14147–00	.O-RING	1					
4	92502–06012	.SCREW, PAN HEAD	2					
5	8CC–14216–10	.SCREW	2					
6	3B4–85885–00	.THROTTLE SENSOR ASSY	1					
7	8FP–13556–00	.RUBBER, INJECTOR	1					
8	2C0–14216–00	.SCREW	1					
9	5S7–82380–00	.SENSOR, PRESSURE	1					
10	B16–14293–00	.COVER 1	1					
11	1UY–14155–00	.GUIDE, CABLE	1					
12	5YP–14562–00	.O-RING	1					
13	1XD–13761–00	.INJECTOR	1					
14	1XD–14147–00	..O-RING	1					
15	B16–13160–00	.DELIVERY PIPE ASSY 1	1					
16	1XD–13543–00	.HOSE, AIR	1					
17	91312–04008	BOLT	3					
18	90464–20010	CLAMP	1					
19	63P–1312A–01	.VALVE, CONTROL	1					

POWER PARTS By AKBAR

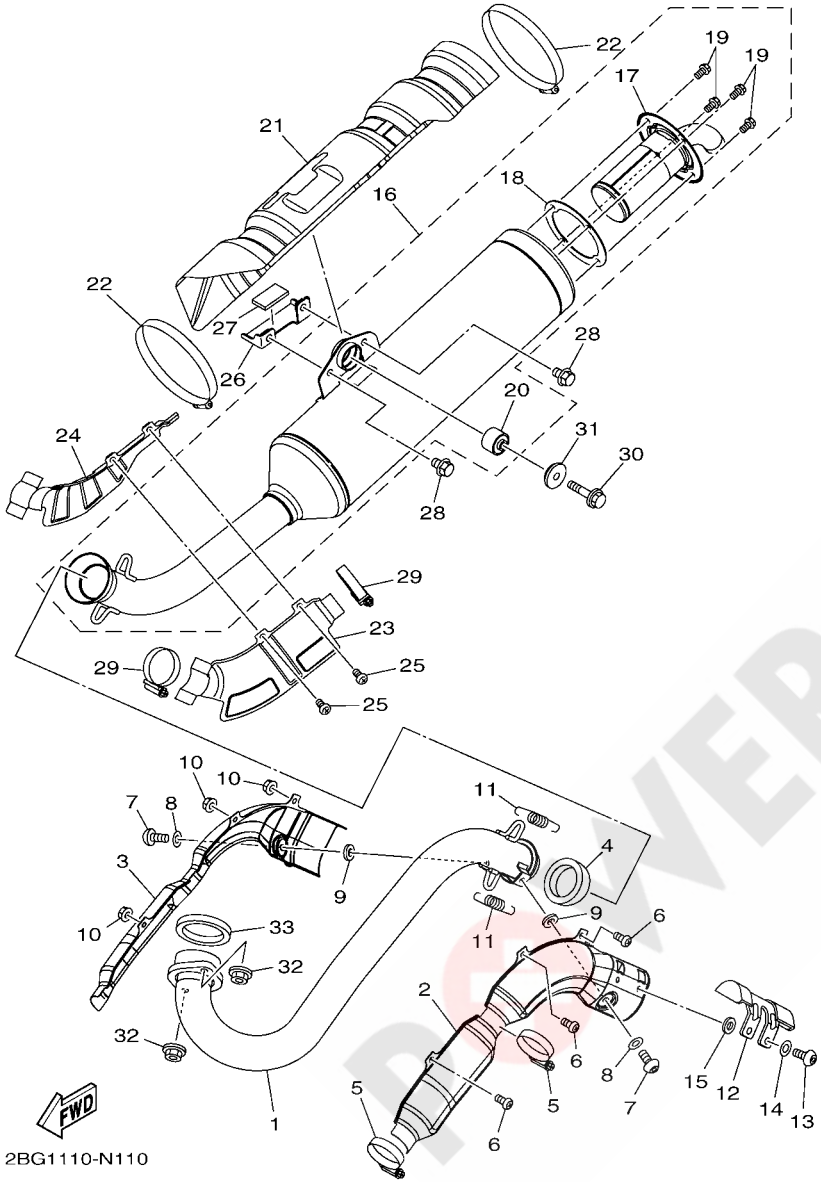

FIG. 11 EXHAUST

REF. NO.	PART NO.	DESCRIPTION	EUR					REMARKS
1	2BG–E4611–01	PIPE, EXHAUST 1	1					
2	2BG–E4627–00	COVER, EXHAUST	1					
3	B16–E463B–00	PROTECTOR, EXT. PIPE 2	1					
4	1HP–E4714–00	GASKET, MUFFLER	1					
5	90450–45806	HOSE CLAMP ASSY	2					
6	98502–06012	SCREW, PAN HEAD	3					
7	92012–06010	BOLT, BUTTON HEAD	2					
8	92902–06200	WASHER	2					
9	90201–05037	WASHER, PLATE	2					
10	95702–06500	NUT, FLANGE	3					
11	90506–30006	SPRING, TENSION	2					
12	1HP–E4758–00	PROTECTOR, SILENCER	1					
13	92012–06012	BOLT, BUTTON HEAD	2					
14	92902–06200	WASHER	2					
15	90201–05015	WASHER, PLATE	2					
16	B16–E4703–00	MUFFLER COMP. 1	1					
17	2BG–E4780–00	.SPARK ARRESTER ASSY	1					
18	2BG–E4755–00	.GASKET, SILENCER	1					
19	95022–06012	.BOLT, FLANGE	4					
20	1HP–F7414–00	.DAMPER, FOOTREST	1					
21	1HP–E4718–00	PROTECTOR, MUFFLER 1	1					
22	90450–99805	HOSE CLAMP ASSY	2					
23	1HP–E471C–00	PROTECTOR ASSY 1	1					
24	1HP–E472C–00	PROTECTOR ASSY., 2	1					
25	98502–06012	SCREW, PAN HEAD	2					
26	1HP–E477U–00	STOPPER 1	1					
27	1HP–E4733–00	MAT 1	1					

POWER PARTS By 4x4&4WD

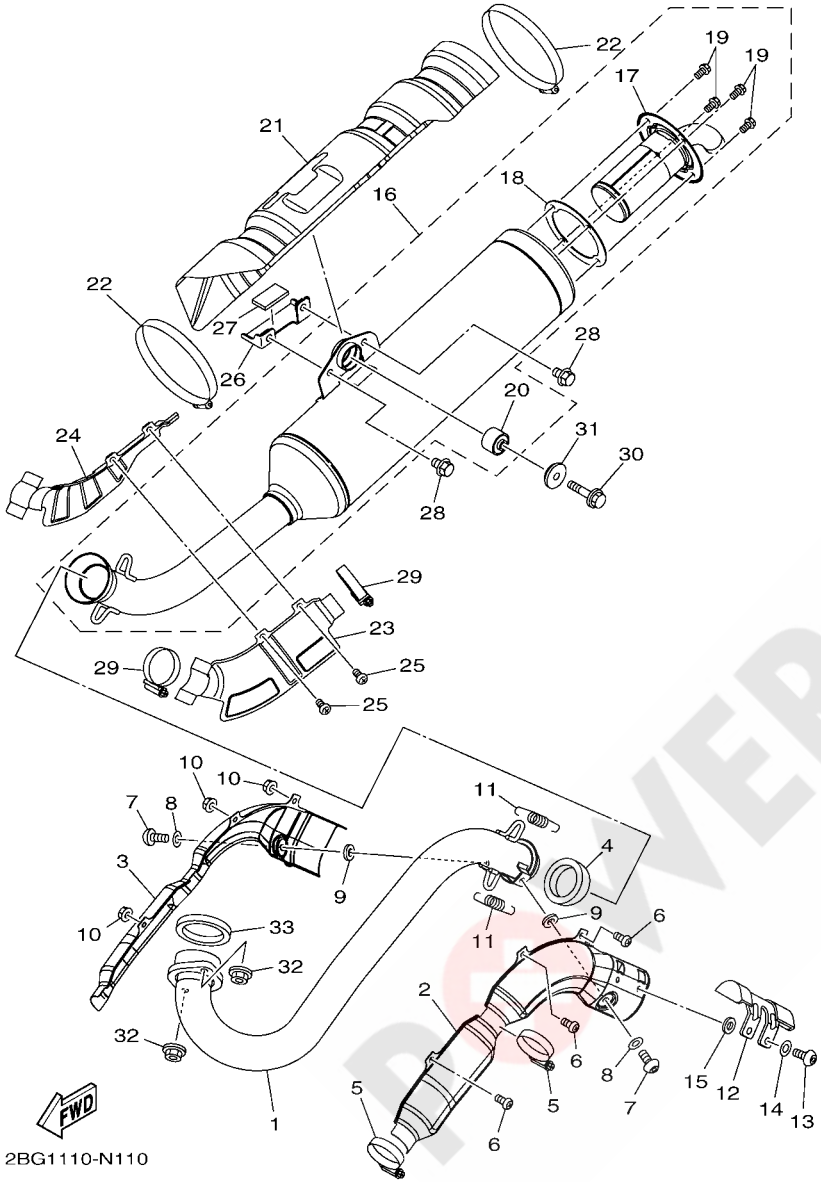

FIG. 11 EXHAUST

REF. NO.	PART NO.	DESCRIPTION	EUR					REMARKS
28	95822–08012	BOLT, FLANGE	2					
29	90450–45806	HOSE CLAMP ASSY	2					
30	95812–08040	BOLT, FLANGE	1					
31	3B4–14759–01	WASHER	1					
32	95702–08500	NUT, FLANGE	2					
33	3EG–14613–00	GASKET, EXHAUST PIPE	1					

POWER PARTS By 4X4UAE

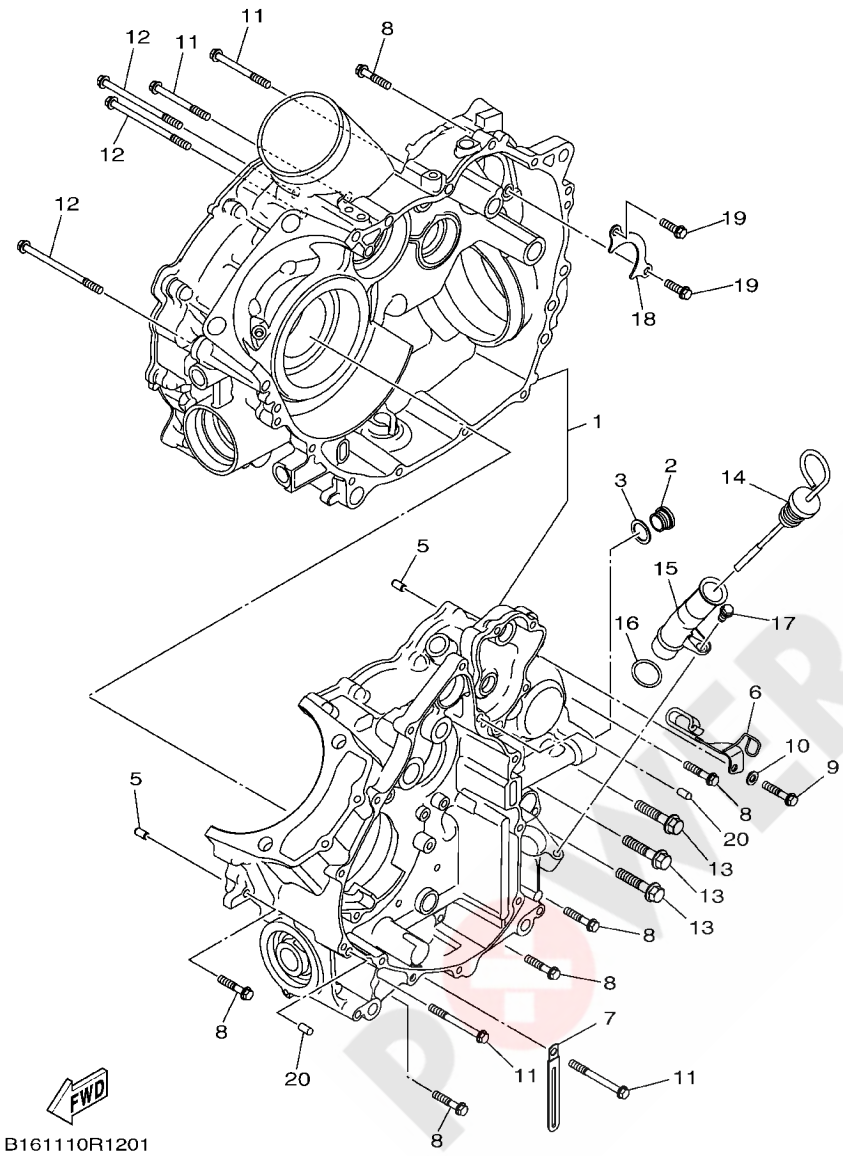

FIG. 12 CRANKCASE

REF. NO.	PART NO.	DESCRIPTION	EUR					REMARKS
1	2MB–E5100–01	CRANKCASE ASSY	1					
2	2MB–E5167–00	PLUG, BLIND 1	1					
3	2MB–E5175–00	GASKET, BLIND PLUG 1	1					
5	2MB–E5184–00	PIN, DOWEL	2					
6	B16–E546C–00	HOLDER	1					
7	B16–E5484–00	CLAMP 2	1					
8	2MB–E5481–50	BOLT 1	6					
9	B16–E5481–00	BOLT 1	1					
10	B16–E5158–00	WASHER	1					
11	2MB–E5481–C0	BOLT 1	4					
12	2MB–E5481–90	BOLT 1	3					
13	2MB–E2623–00	BOLT	3					
14	B16–E5362–00	PLUG, OIL LEVEL	1					
15	B16–E5112–00	PIPE, OIL	1					
16	2MB–E2439–00	O-RING	1					
17	2MB–E5481–60	BOLT 1	1					
18	2MB–E5388–00	PLATE, BEARING COVER	1					
19	2MB–E5481–10	BOLT 1	2					
20	2MB–E5184–00	PIN, DOWEL	2					

POWER PARTS By AKBAR

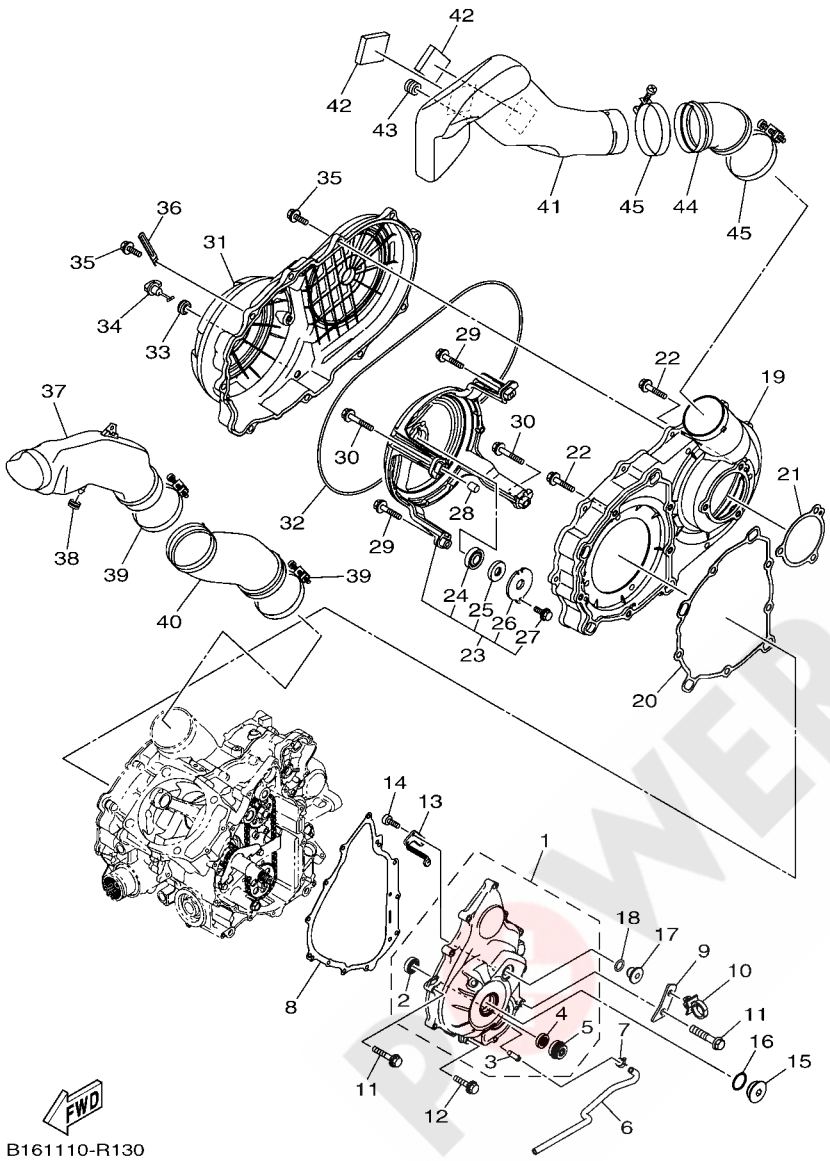

FIG. 13 CRANKCASE COVER 1

REF. NO.	PART NO.	DESCRIPTION	EUR					REMARKS
1	2MB–E5409–00	CRANKCASE COVER ASSY	1					
2	2MB–E5596–00	.BEARING	1					
3	2MB–E243K–00	.PIPE, DRAIN	1					
4	2MB–E511A–00	.OIL SEAL	1					
5	2MB–E2438–00	.SEAL, MECHANICAL	1					
6	2MB–E244H–00	HOSE 5	1					
7	2MB–E5179–00	CLIP	1					
8	2MB–E5451–00	GASKET, CRANKCASE COVER 1	1					
9	B16–E5191–00	PLATE	1					
10	B16–H1128–00	CLAMP	1					
11	2MB–E5481–50	BOLT 1	10					
12	2MB–E5481–20	BOLT 1	1					
13	2MB–E5113–00	PLATE	1					
14	2MB–E5187–00	BOLT	2					
15	2MB–E5168–00	PLUG, BLIND 2	1					
16	2MB–E511C–00	O-RING	1					
17	2MB–E5169–00	PLUG, BLIND 2	1					
18	2MB–E4G97–00	O-RING	1					
19	B16–E5421–00	COVER, CRANKCASE 2	1					
20	2MB–E5453–00	GASKET	1					
21	2MB–E5315–00	SEAL, CRANKCASE	1					
22	2MB–E5482–10	BOLT 2	8					
23	2MB–E5480–00	HOUSING ASSY	1					
24	2MB–E5693–00	.BEARING	1					
25	2MB–E4005–00	.OIL SEAL	1					
26	2MB–E5381–00	.PLATE, BEARING COVER	1					
27	2MB–E5482–00	.BOLT 2	1					

POWER PARTS By 4x4ALMAD

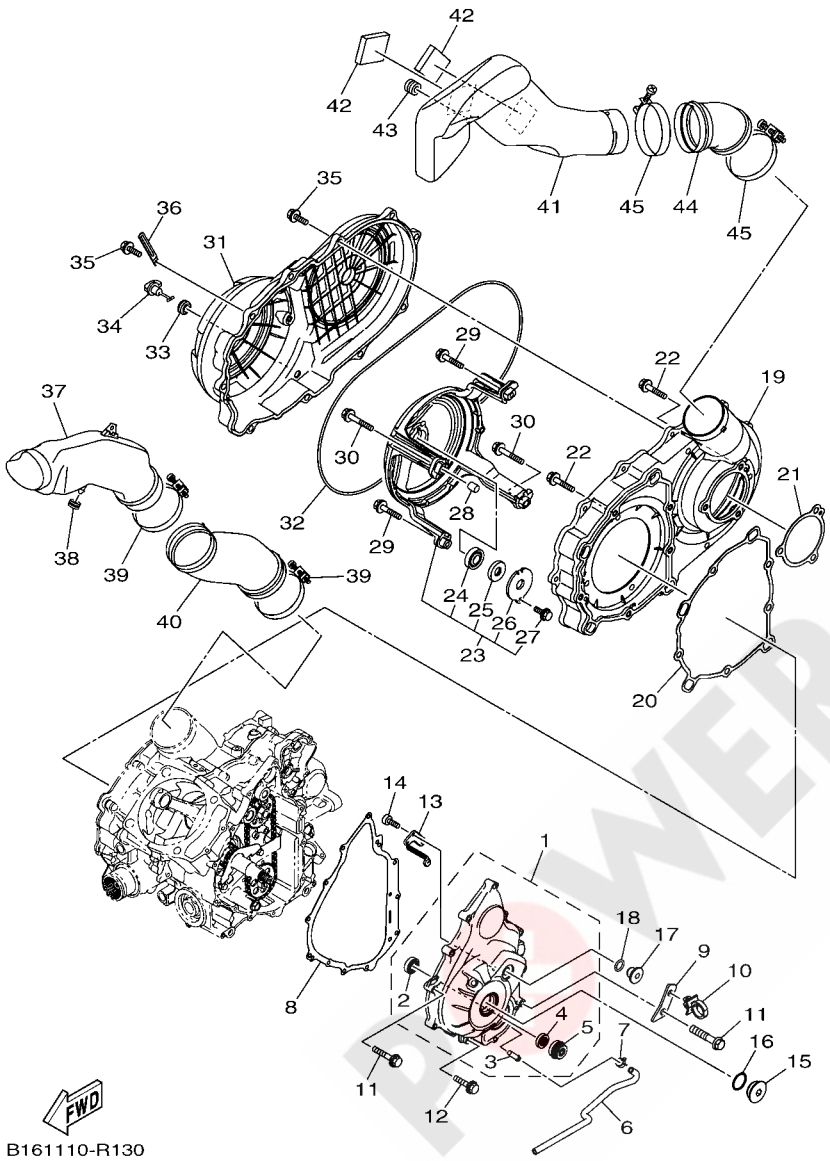

FIG. 13 CRANKCASE COVER 1

REF. NO.	PART NO.	DESCRIPTION	EUR					REMARKS
28	2MB–E5181–00	PIN, DOWEL	2					
29	2MB–E5482–10	BOLT 2	2					
30	2MB–E5482–30	BOLT 2	2					
31	B16–E5431–00	COVER, CRANKCASE 3	1					
32	2MB–E5379–00	SEAL, CRANKCASE	1					
33	2MB–E5365–00	GROMMET	1					
34	2MB–E5351–00	PLUG, DRAIN	1					
35	2MB–E5768–00	BOLT	12					
36	B16–E5484–00	CLAMP 2	1					
37	1HP–E5471–00	DUCT, AIR	1					
38	90480–13567	GROMMET	1					
39	90460–85135	CLAMP, HOSE	2					
40	B16–E5472–00	SEAL, AIR DUCT	1					
41	1HP–E5473–00	DUCT, AIR	1					
42	1S3–82123–00	SEAT, BATTERY	2					
43	90480–13398	GROMMET	1					
44	1HP–E5474–00	SEAL, AIR DUCT	1					
45	90460–85135	CLAMP, HOSE	2					

POWER PARTS By 4x4WD

FIG. 14 STARTER CLUTCH

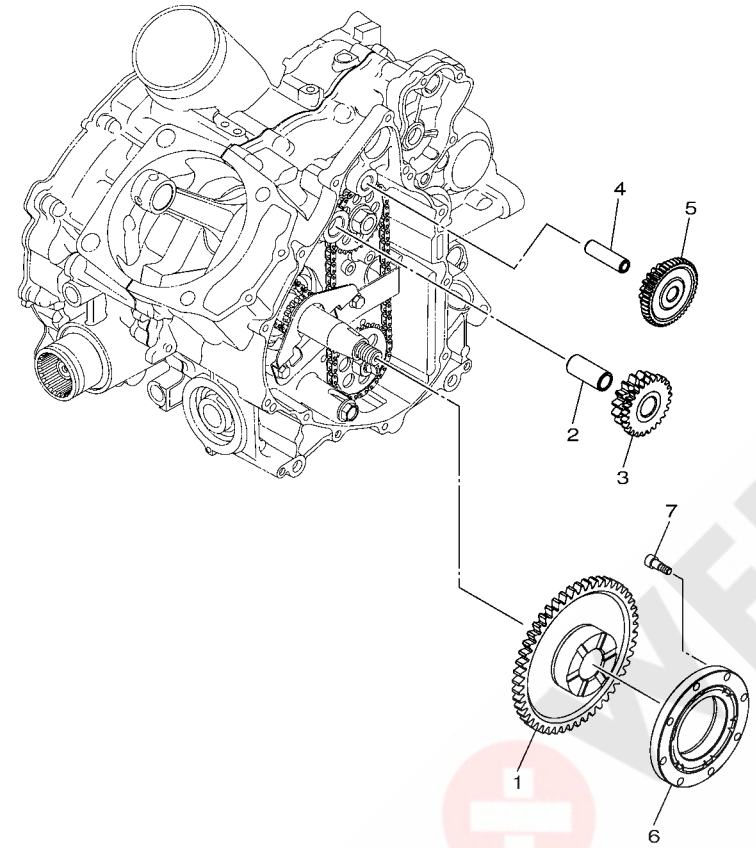

B161110-R140

REF. NO.	PART NO.	DESCRIPTION	EUR					REMARKS
1	2MB–E5515–00	GEAR 3	1					
2	2MB–E5522–00	SHAFT 2	1					
3	2MB–E5517–01	GEAR, IDLER 2	1					
4	2MB–E5521–00	SHAFT 1	1					
5	2MB–E5512–00	GEAR, IDLER 1	1					
6	2MB–E5590–00	STARTER ONE-WAY ASSY	1					
7	2MB–E6777–00	BOLT	8					

POWER PARTS By AKBAR

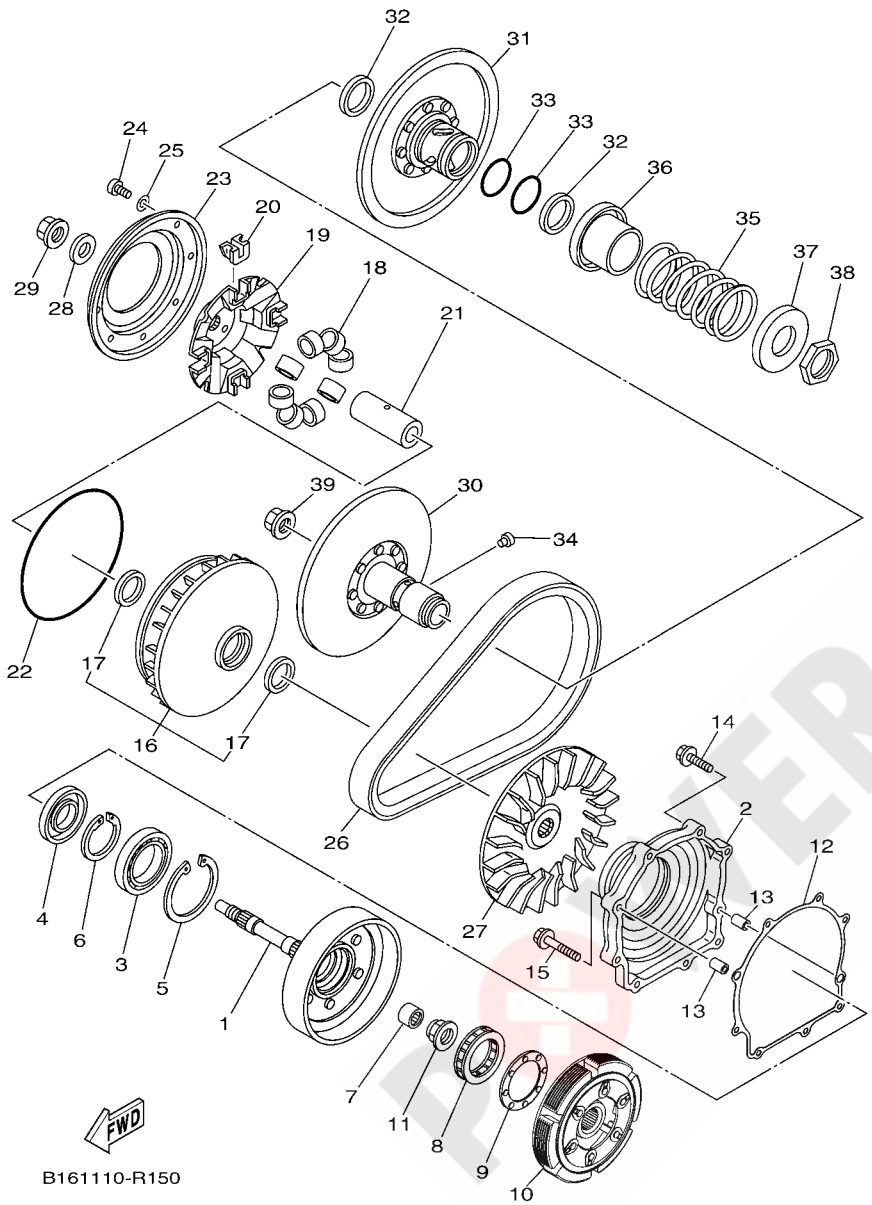

FIG. 15 CLUTCH

REF. NO.	PART NO.	DESCRIPTION	EUR					REMARKS
1	B16–E6611–00	CLUTCH HOUSING COMP.	1					
2	2MB–E5163–00	HOUSING, BEARING 1	1					
3	2MB–E6642–00	BEARING, CLUTCH AXLE	1					
4	2MB–E511B–00	OIL SEAL	1					
5	2MB–E6819–00	CIRCLIP, CLUTCH	1					
6	2MB–E5744–00	CIRCLIP	1					
7	2MB–E7678–00	BEARING	1					
8	2MB–E6664–00	BEARING, ONE WAY	1					
9	2MB–E6717–00	RING, SEAL	1					
10	2MB–E6620–00	CLUTCH CARRIER ASSY	1					
11	2MB–E6134–00	NUT, LOCK	1					
12	2MB–E5463–00	GASKET, 2	1					
13	2MB–E5181–00	PIN, DOWEL	2					
14	2MB–E5481–50	BOLT 1	7					
15	2MB–E5481–30	BOLT 1	2					
16	3B4–17606–00	PRIMARY SLIDING SHEAVE COMP.	1					
17	93101–35001	.OIL SEAL	2					
18	B16–17632–00	WEIGHT	8					
19	3B4–17623–02	CAM	1					
20	3B4–17653–00	SLIDER	4					
21	3B4–17645–00	COLLAR	1					
22	93211–59001	O-RING	1					
23	4WV–17639–10	STOPPER	1					
24	90157–04006	SCREW, PAN HEAD	8					
25	90201–047R9	WASHER, PLATE	8					(M4 WASHER)
26	B16–E7641–00	V-BELT	1					
27	3B4–17611–00	SHEAVE, PRIMARY FIXED	1					

POWER PARTS By AKALAD

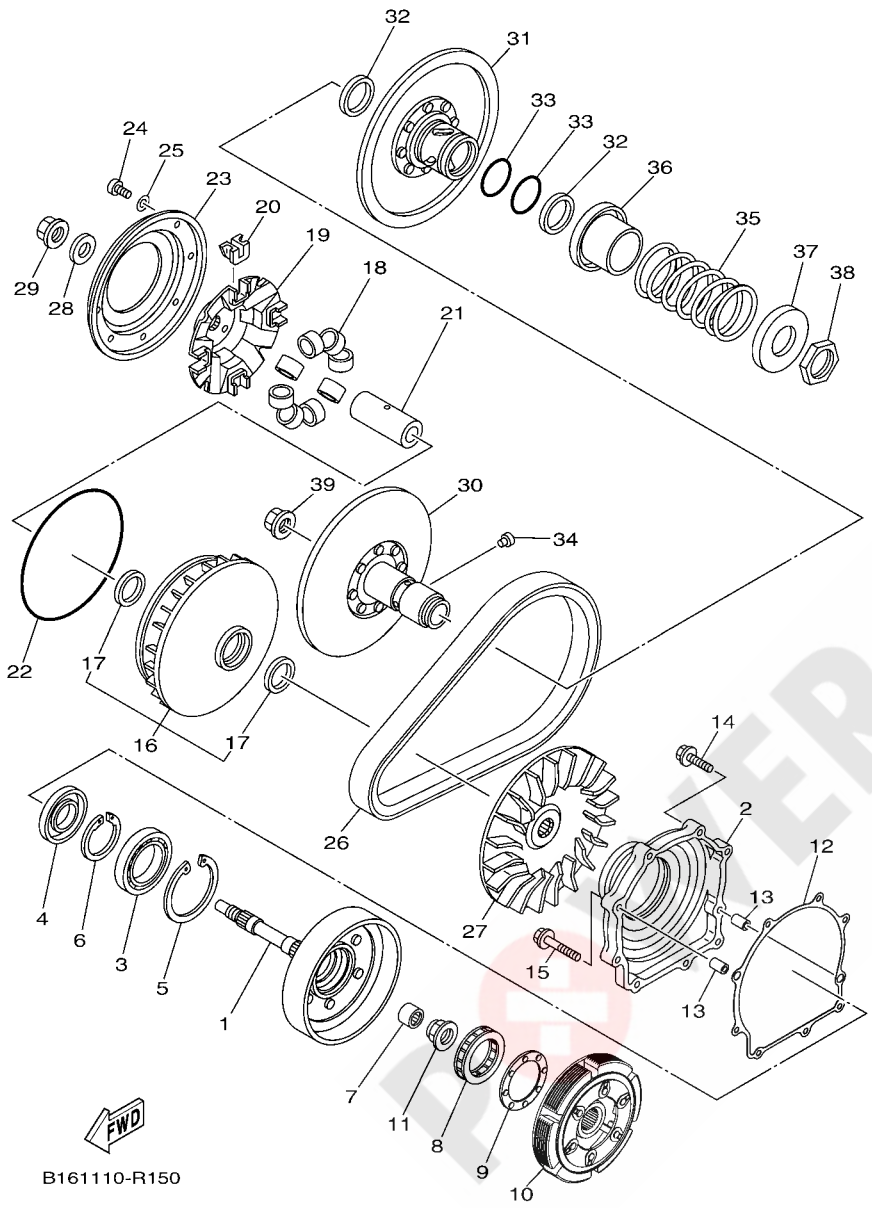

FIG. 15 CLUTCH

REF. NO.	PART NO.	DESCRIPTION	EUR					REMARKS
28	2MB–E7648–00	WASHER	1					
29	2MB–E7668–00	NUT	1					
30	3B4–17660–10	SECONDARY FIXED SHEAVE COMP.	1					
31	3B4–17670–10	SECONDARY SLIDING SHEAVE	1					
32	93104–41119	OIL SEAL	2					
33	93210–44545	O-RING	2					
34	4CW–17664–00	PIN, GUIDE	4					
35	90501–650A0	SPRING, COMPRESSION	1					
36	4WV–17684–00	SEAT, SECONDARY SPRING	1					
37	4WV–17644–00	SEAT,SPRING	1					
38	90170–36279	NUT	1					
39	2MB–E7668–00	NUT	1					

POWER PARTS By AKAMAD

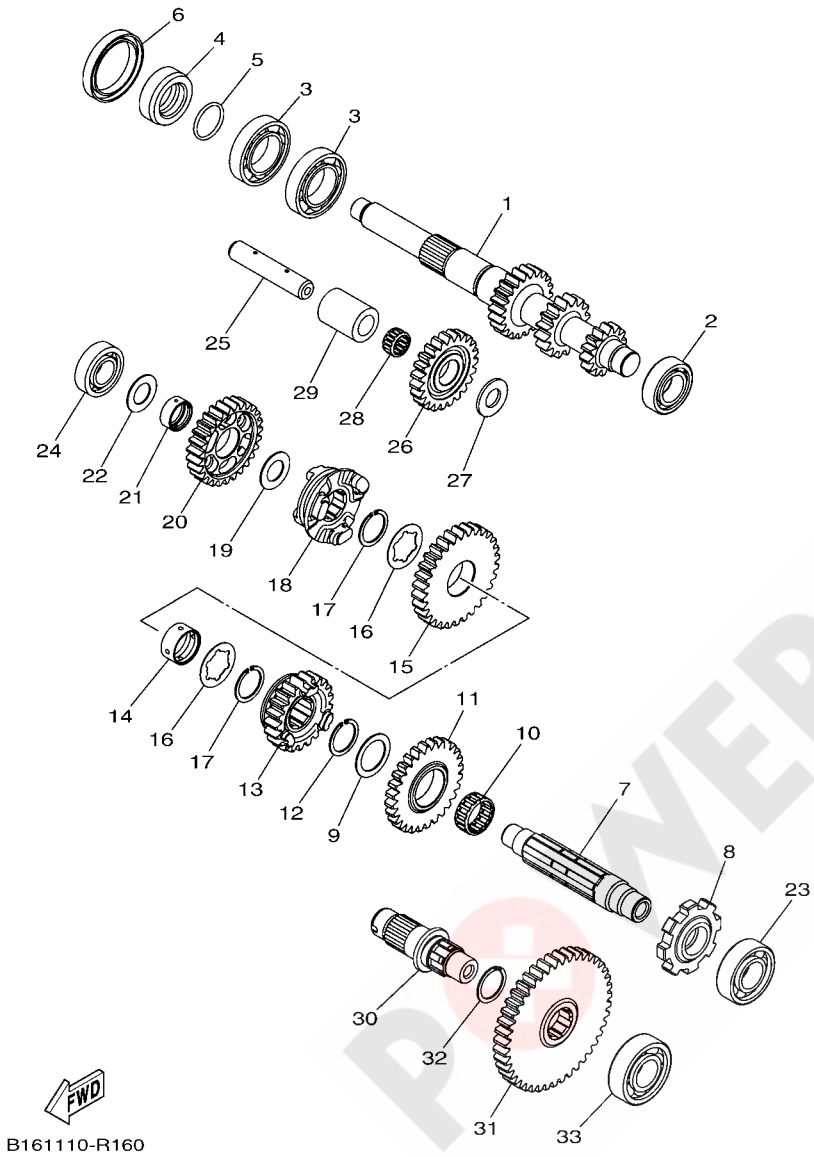

FIG. 16 TRANSMISSION

REF. NO.	PART NO.	DESCRIPTION	EUR					REMARKS
1	B16–E7681–00	SHAFT, SECONDARY	1					
2	2MB–E7156–00	BEARING 1	1					
3	2MB–E7166–00	BEARING 2	2					
4	2MB–E7158–00	COLLAR 1	1					
5	2MB–E76F5–00	O-RING	1					
6	2MB–E76F3–00	OIL SEAL	1					
7	2MB–E7421–00	AXLE, DRIVE	1					
8	B16–E7473–00	STOPPER	1					
9	2MB–E7116–00	WASHER, GEAR HOLD 1	1					
10	2MB–E1428–00	BEARING 1	1					
11	2MB–E7253–00	GEAR, REVERSE WHEEL 2 (28T)	1					
12	2MB–E662A–00	CIRCLIP	1					
13	2MB–E7582–00	GEAR, MIDDLE DRIVE (21T)	1					
14	2MB–E7258–00	COLLAR 1	1					
15	2MB–E7233–00	GEAR, LOW WHEEL (31T)	1					
16	2MB–E7126–00	WASHER, GEAR HOLD 2	2					
17	2MB–E662A–00	CIRCLIP	2					
18	B16–E7285–00	CLUTCH, DOG	1					
19	2MB–E7136–00	WASHER, GEAR HOLD 3	1					
20	B16–E7223–00	GEAR, HIGH WHEEL (27T)	1					
21	2MB–E7268–00	COLLAR 2	1					
22	2MB–E7154–00	WASHER, GEAR HOLD	1					
23	2MB–E1429–00	BEARING 2	1					
24	2MB–E142A–00	BEARING	1					
25	2MB–E7432–00	AXLE, IDLE	1					
26	2MB–E7243–00	GEAR, REVERSE WHEEL 1 (23T)	1					
27	2MB–E7059–00	WASHER,2	1					

POWER PARTS By AKEMAD

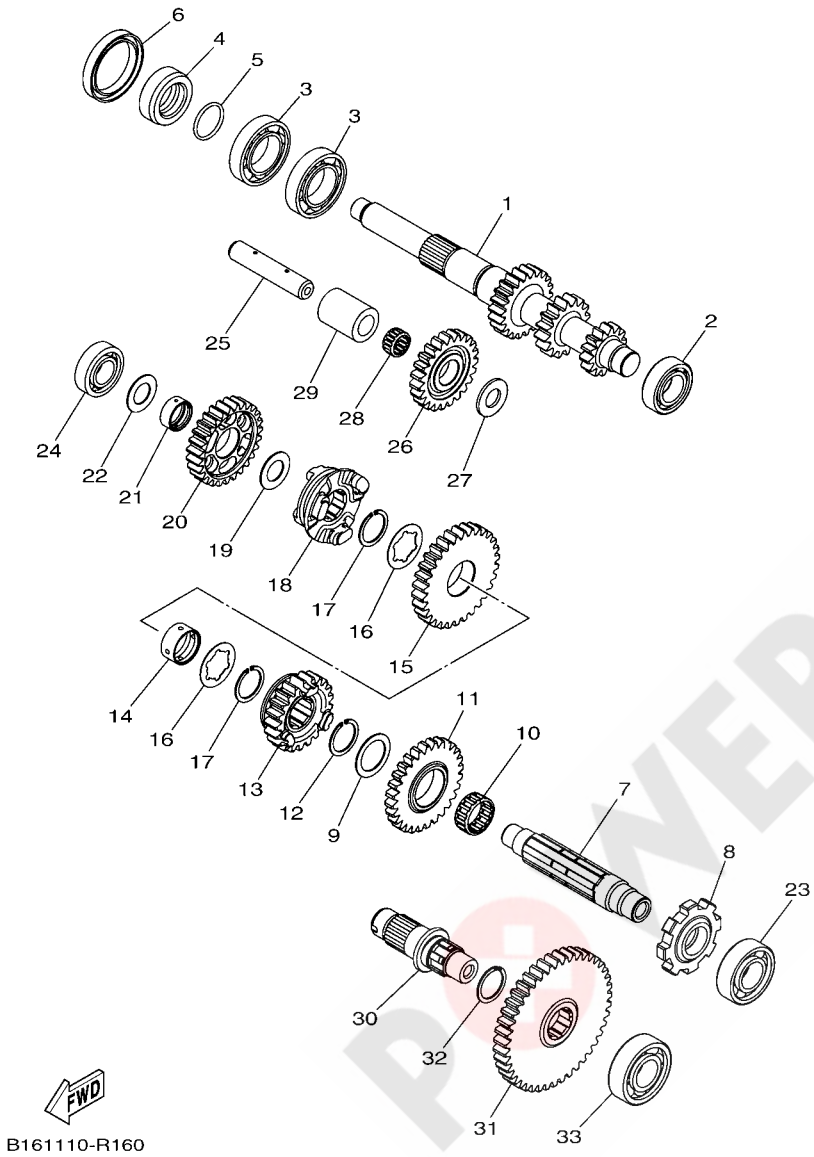

FIG. 16 TRANSMISSION

REF. NO.	PART NO.	DESCRIPTION	EUR					REMARKS
28	2MB–E142B–00	BEARING 4	1					
29	2MB–E7278–00	COLLAR	1					
30	2MB–E7523–00	SHAFT	1					
31	2MB–E7583–00	GEAR, MIDDLE DRIVEN (43T)	1					
32	2MB–E662A–00	CIRCLIP	1					
33	2MB–E4814–00	BEARING	1					

POWER PARTS By AKBAR

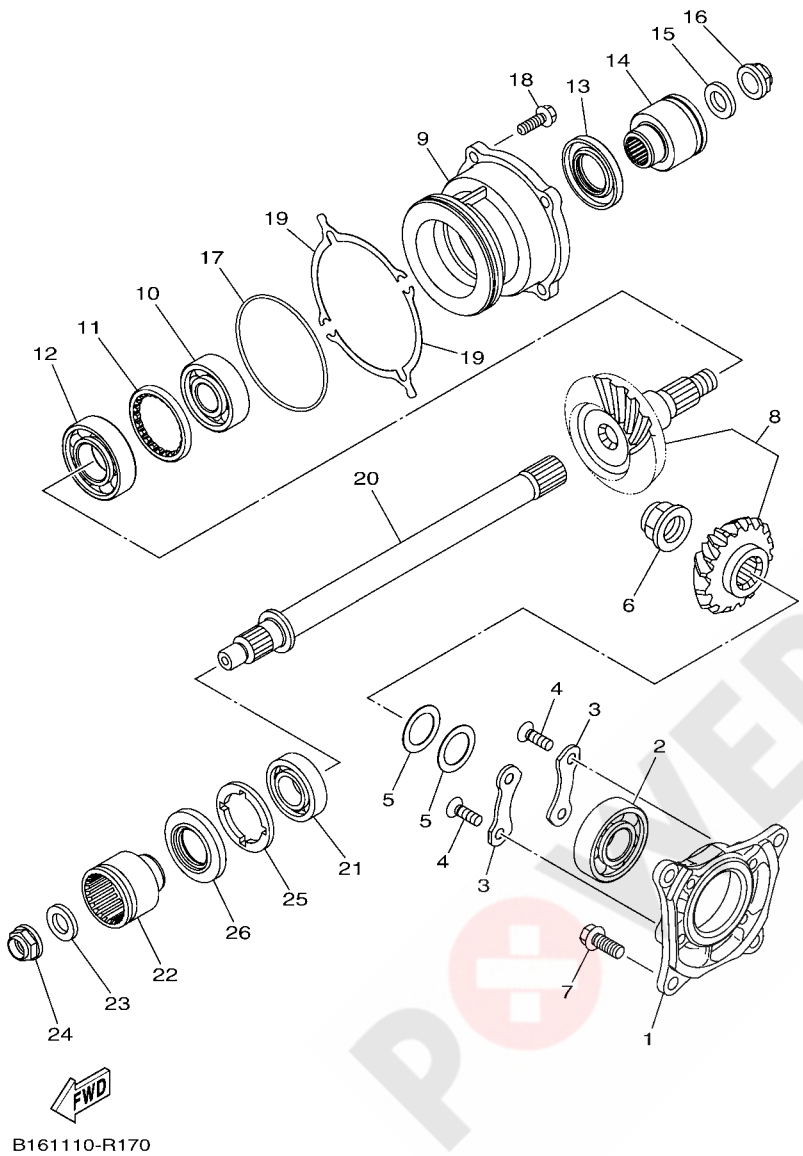

FIG. 17 MIDDLE DRIVE GEAR

REF. NO.	PART NO.	DESCRIPTION	EUR					REMARKS
1	B16–E7521–00	HOUSING, BEARING	1					
2	2MB–E7412–00	BEARING	1					
3	2MB–E5383–00	PLATE, BEARING COVER	2					
4	2MB–E765G–00	SCREW, FIXED	4					
5	2MB–E7417–50	SHIM 1 (0.5T)	2					UR
	2MB–E7417–60	SHIM 1 (0.55T)	2					UR
	2MB–E7417–70	SHIM 1 (0.6T)	2					UR
	2MB–E7417–80	SHIM 1 (0.7T)	2					UR
	2MB–E7417–90	SHIM 1 (0.8T)	2					UR
	2MB–E7417–A0	SHIM 1 (0.9T)	2					UR
	2MB–E7417–B0	SHIM 1 (1.0T)	2					UR
6	2MB–E7463–00	NUT, LOCK	1					
7	2MB–E22A1–00	BOLT 2	4					
8	B16–17530–00	PINION SET	1					
9	2MB–E7551–00	HOUSING, BEARING	1					
10	2MB–E7413–00	BEARING 2	1					
11	2MB–E7589–00	NUT	1					
12	2MB–E7422–00	BEARING 1	1					
13	2MB–E7499–00	OIL SEAL	1					
14	2MB–E7832–00	COUPLING	1					
15	B16–E7058–00	WASHER,1	1					
16	2MB–E6647–00	NUT	1					
17	2MB–E76F4–00	O-RING	1					
18	2MB–E2615–00	BOLT	4					
19	2MB–E7531–00	SHIM, PINION (0.1T)	2					UR
	2MB–E7531–10	SHIM, PINION (0.15T)	2					UR
	2MB–E7531–20	SHIM, PINION (0.2T)	2					UR

POWER PARTS By AKAWAD

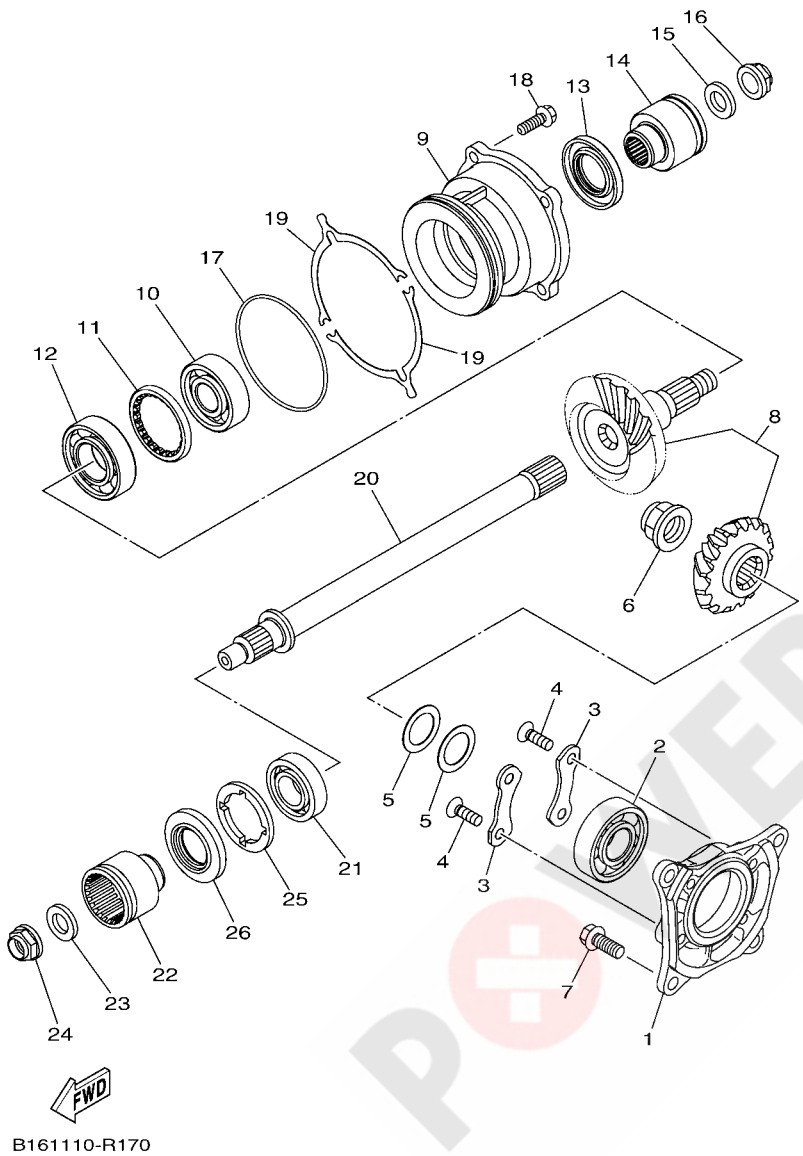

FIG. 17 MIDDLE DRIVE GEAR

REF. NO.	PART NO.	DESCRIPTION	EUR					REMARKS
19	2MB–E7531–30	SHIM, PINION (0.3T)	2					UR
	2MB–E7531–40	SHIM, PINION (0.4T)	2					UR
	2MB–E7531–50	SHIM, PINION (0.5T)	2					UR
	2MB–E7531–60	SHIM, PINION (0.6T)	2					UR
20	B16–E761A–00	SHAFT 1	1					
21	2MB–E7423–00	BEARING 2	1					
22	2MB–E7832–00	COUPLING	1					
23	B16–E7058–00	WASHER,1	1					
24	2MB–E6647–00	NUT	1					
25	2MB–E7642–00	NUT, BEARING	1					
26	2MB–E7499–00	OIL SEAL	1					

POWER PARTS By 4x4&UAD

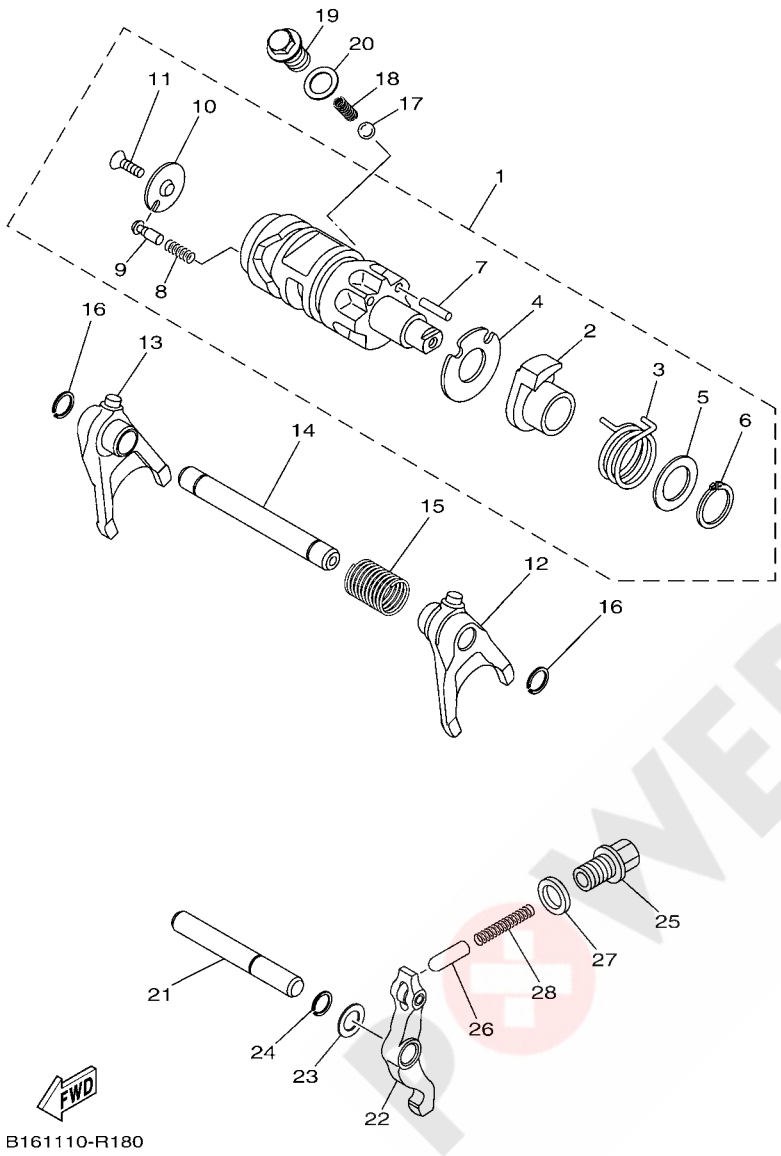

FIG. 18 SHIFT CAM & FORK

REF. NO.	PART NO.	DESCRIPTION	EUR					REMARKS
1	B16–E8540–00	SHIFT CAM ASSY	1					
2	B16–E8171–00	.CAM, LEVER	1					
3	B16–E8124–00	.SPRING, SHAFT RETURN	1					
4	B16–E8331–00	.PLATE, SHIFT CAM	1					
5	B16–E8435–00	.SPACER, CAM SHAFT	1					
6	B16–E8135–00	.CLIP, SHIFT SHAFT	1					
7	B16–E8126–00	.PIN, LEVER	1					
8	2MB–E8222–00	.SPRING 2	1					
9	2MB–E8542–00	.POINT, NEUTRAL	1					
10	2MB–E8566–00	.PLATE, SIDE 2	1					
11	2MB–E8563–00	.SCREW, STOPPER PLATE	1					
12	2MB–E8511–00	FORK, SHIFT 1	1					
13	B16–E8512–00	FORK, SHIFT 2	1					
14	B16–E8531–00	BAR, SHIFT FORK GUIDE 1	1					
15	2MB–E8123–00	SPRING	1					
16	2MB–E5597–00	CIRCLIP 2	2					
17	2MB–E8218–00	BALL	1					
18	2MB–E8143–00	SPRING	1					
19	2MB–E8119–00	BOLT, SHIFT	1					
20	2MB–E8363–00	GASKET	1					
21	B16–E8318–00	SHAFT, SHIFTER	1					
22	B16–E8140–00	STOPPER LEVER ASSY	1					
23	B16–E8139–00	WASHER, LOCK	1					
24	2MB–E5597–00	CIRCLIP 2	1					
25	B16–E8177–00	BOLT, STOPPER	1					
26	B16–E8547–00	STOPPER, CAM	1					
27	2MB–E8363–00	GASKET	1					

POWER PARTS By 4x4WD

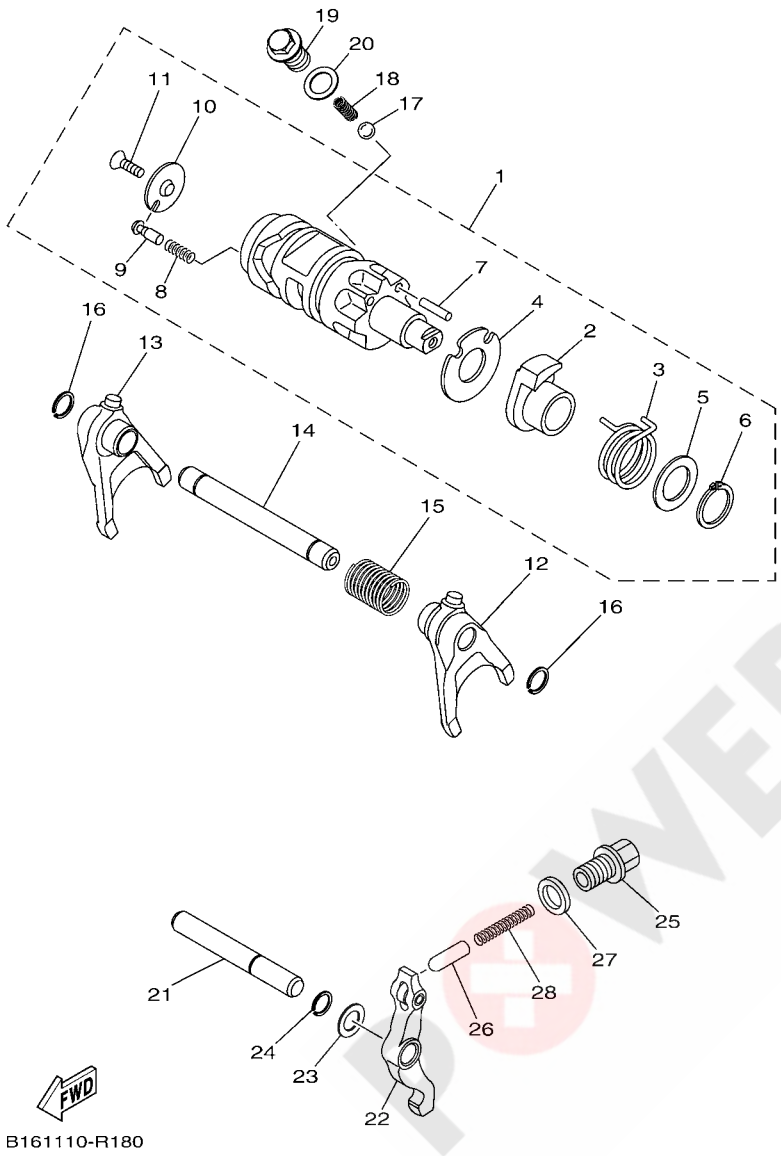

FIG. 18 SHIFT CAM & FORK

REF. NO.	PART NO.	DESCRIPTION	EUR					REMARKS
28	B16–E8221–00	SPRING,1	1					

POWER PARTS By 4X4UAE

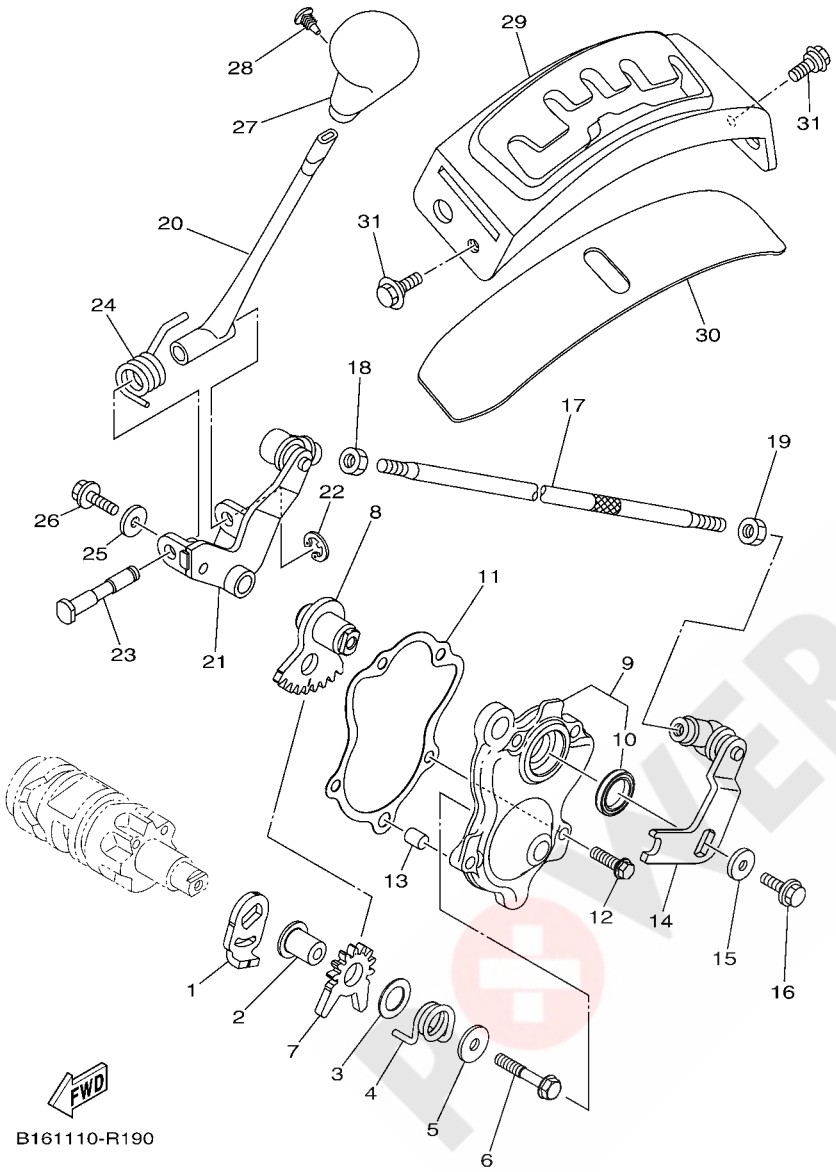

FIG. 19 SHIFT SHAFT

REF. NO.	PART NO.	DESCRIPTION	EUR					REMARKS
1	B16–E8198–00	LEVER	1					
2	2MB–E8413–00	COLLAR, SHIFTER	1					
3	2MB–E8137–00	WASHER 1	1					
4	B16–E8183–00	SPRING	1					
5	2MB–E8138–00	WASHER 2	1					
6	2MB–E5482–20	BOLT 2	1					
7	2MB–E8191–00	LEVER	1					
8	B16–E8103–00	SHIFT SHAFT COMP.	1					
9	B16–E8380–00	SHIFTER BRKT. ASSY	1					
10	B16–E76G3–00	.OIL SEAL 2	1					
11	2MB–E8146–00	GASKET	1					
12	2MB–E5481–10	BOLT 1	4					
13	2MB–E8438–00	PIN, DOWEL	1					
14	28P–18104–00	SHIFT GUIDE COMP.	1					
15	90201–06036	WASHER, PLATE	1					
16	90105–06176	BOLT, FLANGE	1					
17	B16–18115–00	ROD, SHIFT	1					
18	90170–06228	NUT (COUNTER CLOCKWISE)	1					
19	95312–06700	NUT	1					
20	1HP–E8190–00	LEVER COMP. 1	1					
21	1HP–E8169–00	ARM, SHIFT 2	1					
22	99002–06600	CLIP	1					
23	1HP–E8125–00	SHAFT, SHIFT	1					
24	1HP–E8196–00	SPRING, RETURN	1					
25	90201–06036	WASHER, PLATE	1					
26	95812–06016	BOLT, FLANGE	1					
27	28P–18174–00	KNOB, SHIFT LEVER	1					

POWER PARTS By AKALAD

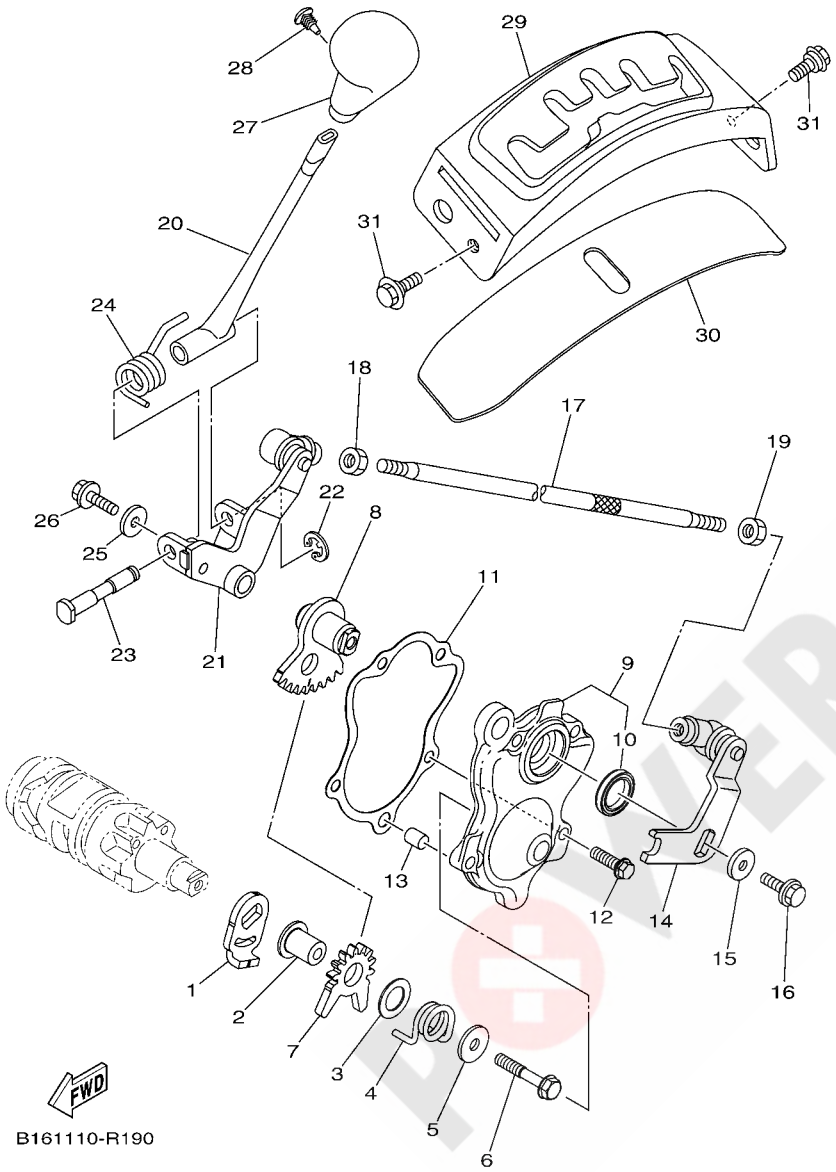

FIG. 19 SHIFT SHAFT

REF. NO.	PART NO.	DESCRIPTION	EUR					REMARKS
28	90269–05055	RIVET	1					
29	1HP–E8172–00	GUIDE, SHIFT	1					
30	1HP–E8154–00	COVER, DUST	1					
31	90109–06043	BOLT	2					

POWER PARTS By AKBLAD

FIG. 20 FRAME

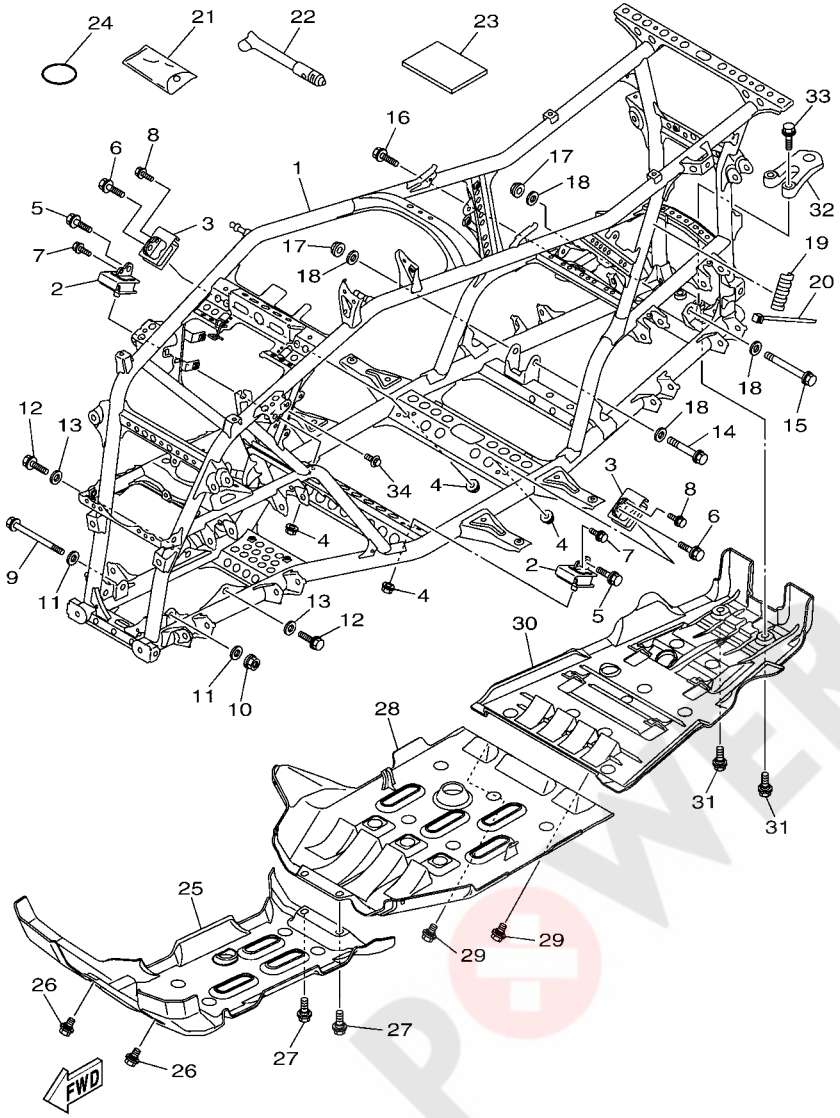

REF. NO.	PART NO.	DESCRIPTION	EUR					REMARKS
1	B16–F1110–00	FRAME COMP.	1					
2	B16–F1485–00	DAMPER, RUBBER 1	2					
3	B16–21485–00	DAMPER, RUBBER 1	2					
4	90185–10011	NUT, SELF-LOCKING	4					
5	2MB–E3574–00	BOLT 2	2					
6	95812–10035	BOLT, FLANGE	2					
7	2MB–E5481–A0	BOLT 1	2					
8	90105–06639	BOLT, FLANGE	2					
9	90105–10219	BOLT, FLANGE	1					
10	90185–10011	NUT, SELF-LOCKING	1					
11	90201–10035	WASHER, PLATE	2					
12	90105–10237	BOLT, FLANGE	2					
13	90201–10035	WASHER, PLATE	2					
14	90105–12803	BOLT, FLANGE	1					
15	90105–12065	BOLT, FLANGE	1					
16	90105–10237	BOLT, FLANGE	1					
17	90185–12002	NUT, SELF-LOCKING	2					
18	90201–12361	WASHER, PLATE	4					
19	3B4–2113B–01	DAMPER	1					
20	90464–40825	CLAMP	1					
21	2BG–F8100–00	TOOL KIT	1					
22	1NV–2811A–01	GAUGE, AIR	1					
23	B16–F8199–60	MANUAL,OWNER'S	1					
24	93210–64297	O-RING	1					
25	B16–F147A–00	GUARD, ENGINE 1	1					
26	90109–06202	BOLT	2					
27	90109–06214	BOLT	2					

POWER PARTS By AKAMAD

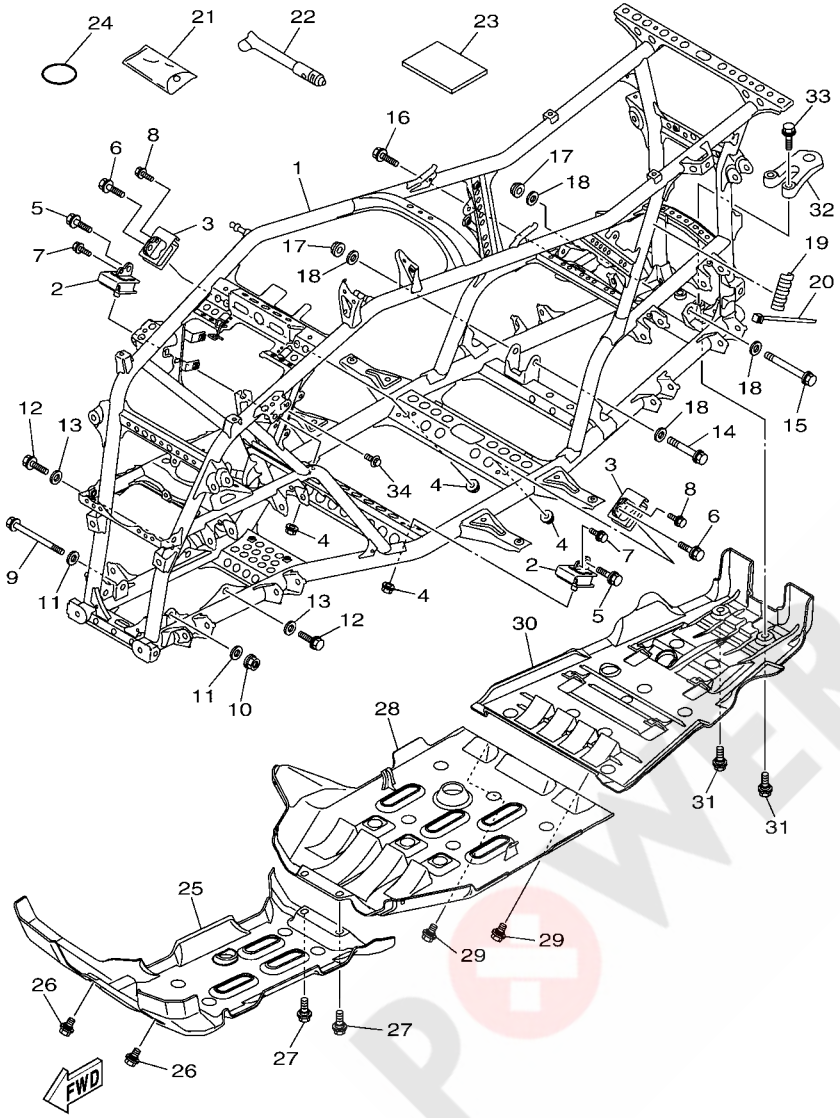

FIG. 20 FRAME

REF. NO.	PART NO.	DESCRIPTION	EUR					REMARKS
28	1HP–F147E–01	GUARD, ENGINE 2	1					
29	90109–06214	BOLT	2					
30	B16–F147F–00	GUARD, ENGINE 3	1					
31	90109–06202	BOLT	2					
32	1HP–F8488–00	HOOK	1					
33	95812–10035	BOLT, FLANGE	2					
34	95812–06012	BOLT, FLANGE	1					

POWER PARTS By AKBAR

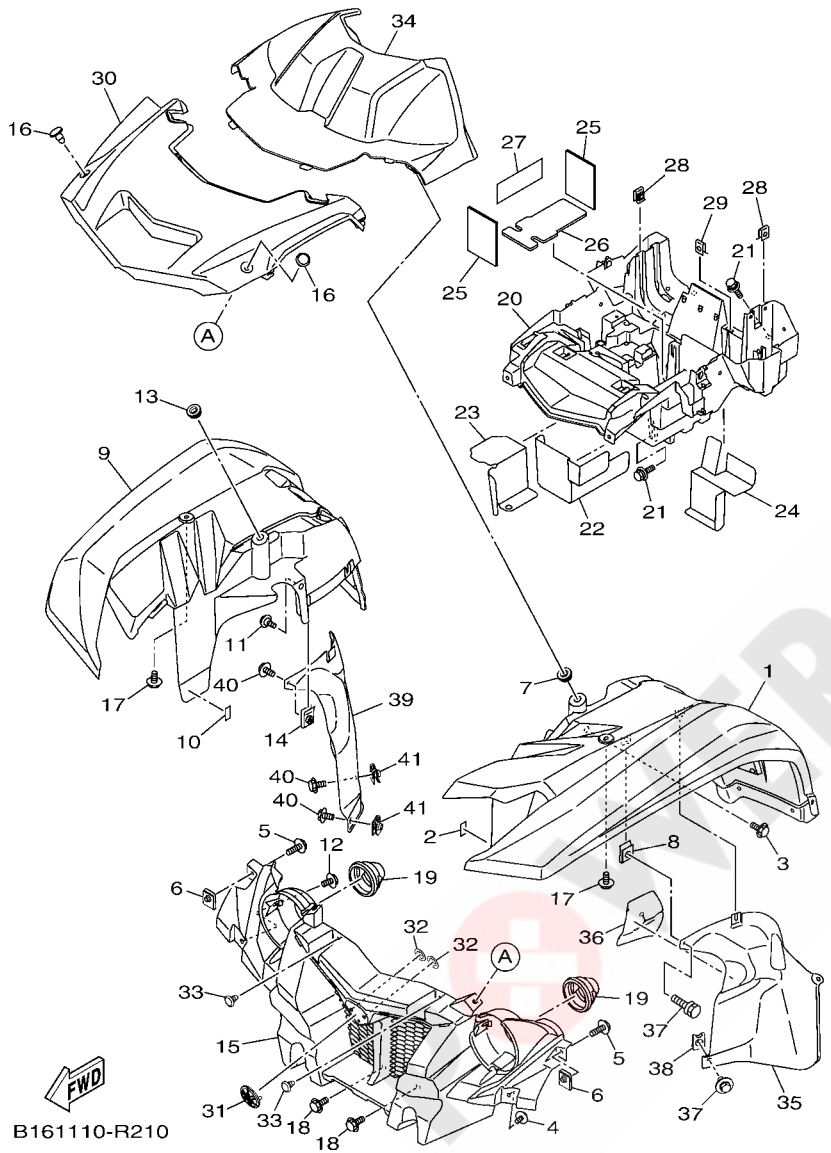

FIG. 21 FRONT FENDER

REF. NO.	PART NO.	DESCRIPTION	EUR					REMARKS
1	B16–F1500–30	FRONT FENDER ASSY	1					UR FOR PDG
	B16–F1500–40	FRONT FENDER ASSY	1					UR FOR DPBSN
2	3B4–21541–00	DAMPER 1	1					
3	90109–06043	BOLT	1					
4	90119–06152	BOLT, WITH WASHER	1					
5	90119–05193	BOLT, WITH WASHER	2					
6	90183–051A0	NUT, SPRING	2					
7	90480–13398	GROMMET	1					
8	90183–06053	NUT, SPRING	1					
9	B16–F1556–00	FENDER, FRONT 2	1					UR FOR PDG
	B16–F1556–20	FENDER, FRONT 2	1					UR FOR DPBSN
10	3B4–21541–00	DAMPER 1	1					
11	90109–06043	BOLT	1					
12	90119–06152	BOLT, WITH WASHER	1					
13	90480–13398	GROMMET	1					
14	90183–06053	NUT, SPRING	1					
15	B16–F8309–00	GRILLE, FRONT	1					
16	90269–07010	RIVET	2					
17	90119–06152	BOLT, WITH WASHER	2					
18	90109–06043	BOLT	2					
19	5UH–F8349–00	CAP	2					
20	1HP–H212B–01	BOX, BATTERY 1	1					
21	90119–06152	BOLT, WITH WASHER	3					
22	1HP–H253E–00	INSULATOR 1	1					
23	1HP–H253F–00	INSULATOR 2	1					
24	1HP–H254E–00	INSULATOR	1					
25	3B4–8233W–10	INSU.	2					

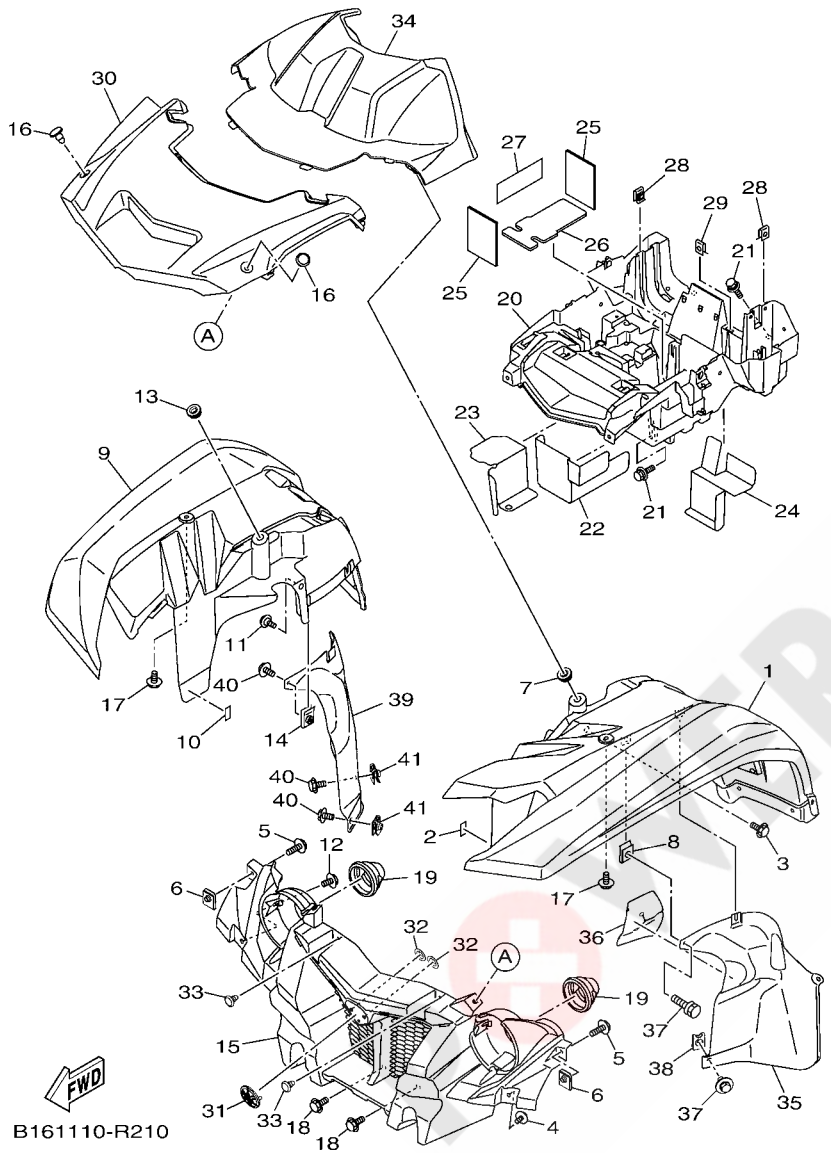

FIG. 21 FRONT FENDER

REF. NO.	PART NO.	DESCRIPTION	EUR					REMARKS
26	3B4–82122–00	SEAT, BATTERY	1					
27	1HP–H2176–00	DAMPER	1					
28	90183–06053	NUT, SPRING	2					
29	90183–05008	NUT, SPRING	2					
30	B16–F3391–00	PANEL, FRONT	1					
31	1XD–F175B–00	TUNING FORK MARK	1					
32	90183–06071	NUT, SPRING	2					
33	90269–07010	RIVET	2					
34	B16–F839R–00	PANEL, ACCESSORY	1					
35	1HP–F1552–00	FENDER, INNER	1					
36	1HP–F1575–00	SEAL 1	1					
37	90119–06152	BOLT, WITH WASHER	2					
38	90183–06053	NUT, SPRING	1					
39	1HP–F1553–00	FENDER, INNER 2	1					
40	90119–06152	BOLT, WITH WASHER	3					
41	90183–06053	NUT, SPRING	2					

By 4x4&4AD

FIG. 22 REAR FENDER

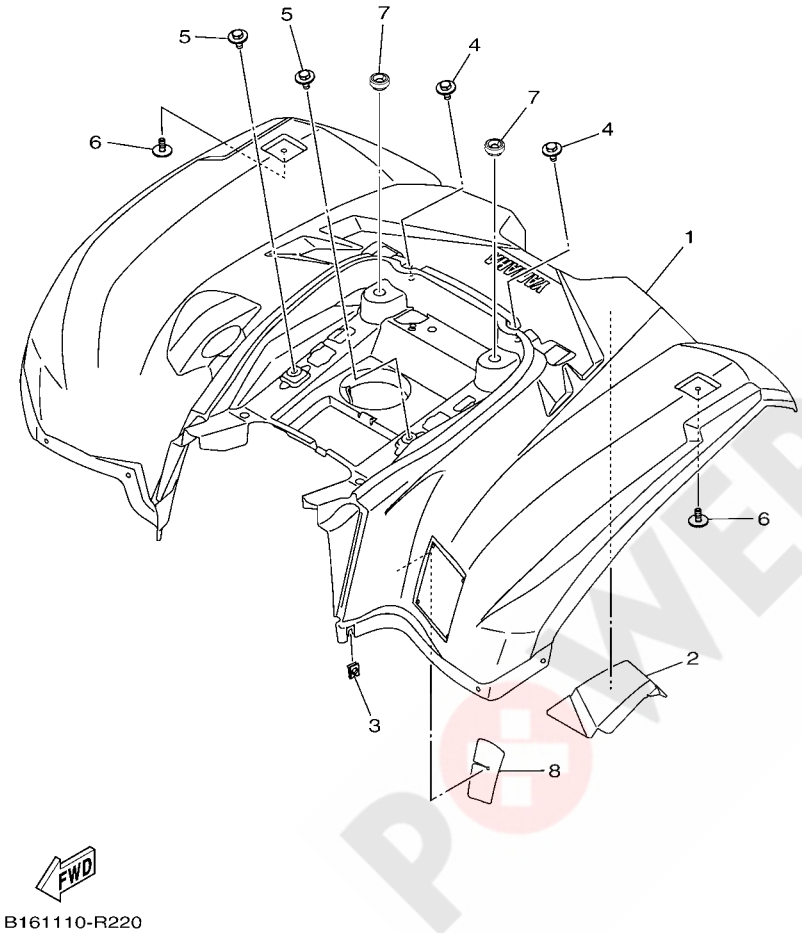

REF. NO.	PART NO.	DESCRIPTION	EUR					REMARKS
1	B16–F1600–40	REAR FENDER ASSY	1					UR FOR PDG
	B16–F1600–50	REAR FENDER ASSY	1					UR FOR DPBSN
2	B16–21652–00	PROTECTOR	1					
3	90183–06053	NUT, SPRING	1					
4	90119–06152	BOLT, WITH WASHER	2					
5	90119–06152	BOLT, WITH WASHER	2					
6	90119–06152	BOLT, WITH WASHER	2					
7	90480–16807	GROMMET	2					
8	B16–F1669–00	SEAL	1					

POWER PARTS By 4x4WD

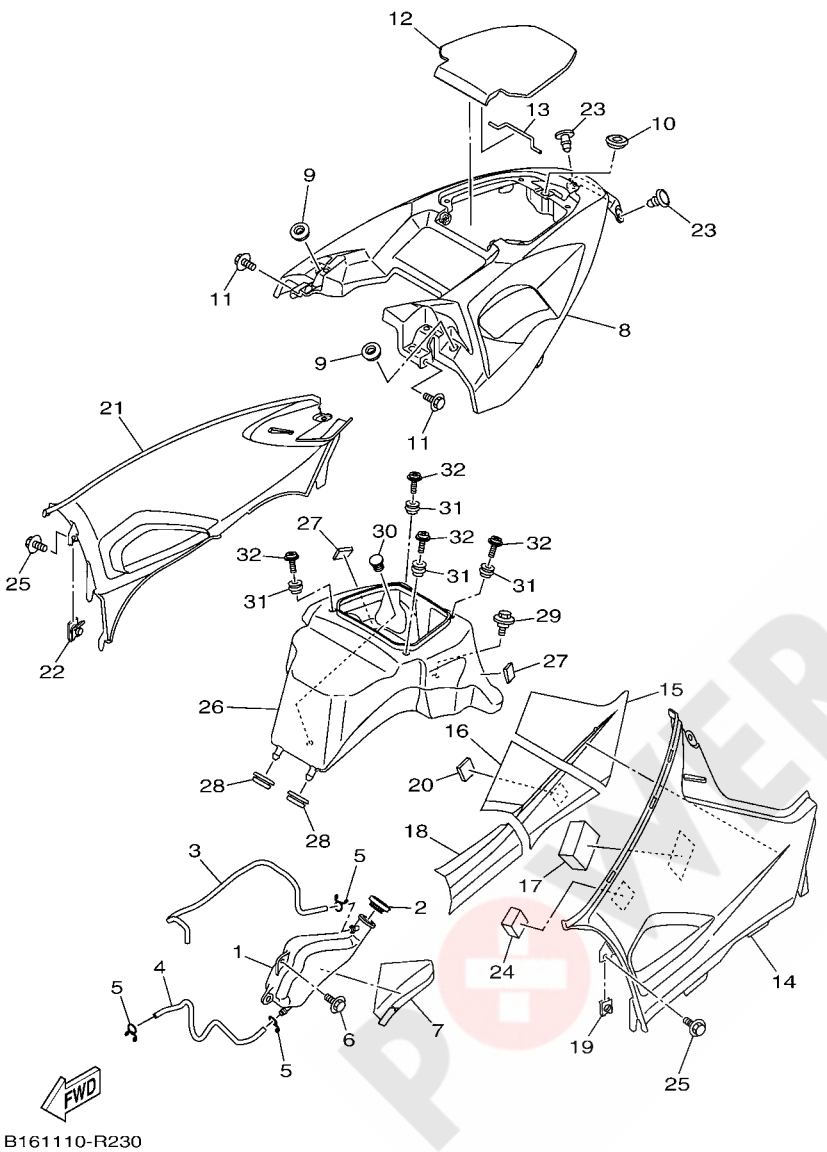

FIG. 23 SIDE COVER

REF. NO.	PART NO.	DESCRIPTION	EUR					REMARKS
1	1HP–F1871–01	TANK, RECOVERY	1					
2	1S3–21875–00	CAP	1					
3	90445–08841	HOSE (L540)	1					
4	90445–08840	HOSE (L420)	1					
5	90467–08003	CLIP	3					
6	90119–06152	BOLT, WITH WASHER	2					
7	1HP–F176E–00	PLATE	1					
8	B16–F171A–00	COVER, TOP	1					UR FOR PDG
	B16–F171A–20	COVER, TOP	1					UR FOR DPBSN
9	90480–13567	GROMMET	2					
10	90480–01558	GROMMET	1					
11	90119–06152	BOLT, WITH WASHER	2					
12	B16–F177B–00	LID, COVER	1					UR FOR PDG
	B16–F177B–20	LID, COVER	1					UR FOR DPBSN
13	3B4–2177K–00	PIN, HINGE	1					
14	B16–F1711–00	COVER, SIDE 1	1					UR FOR PDG
	B16–F1711–20	COVER, SIDE 1	1					UR FOR DPBSN
15	B16–F174A–00	INSULATOR, SIDE COVER	1					
16	B16–F173N–00	SEAL 4	1					
17	3B4–2174Y–00	DAMPER	1					
18	B16–F173M–00	SEAL 3	1					
19	90183–06053	NUT, SPRING	1					
20	3B4–2177N–00	DAMPER, LOCATING 4	1					
21	B16–F1721–00	COVER, SIDE 2	1					UR FOR PDG
	B16–F1721–20	COVER, SIDE 2	1					UR FOR DPBSN
22	90183–06053	NUT, SPRING	1					
23	90269–07010	RIVET	2					

POWER PARTS By AKAWAD

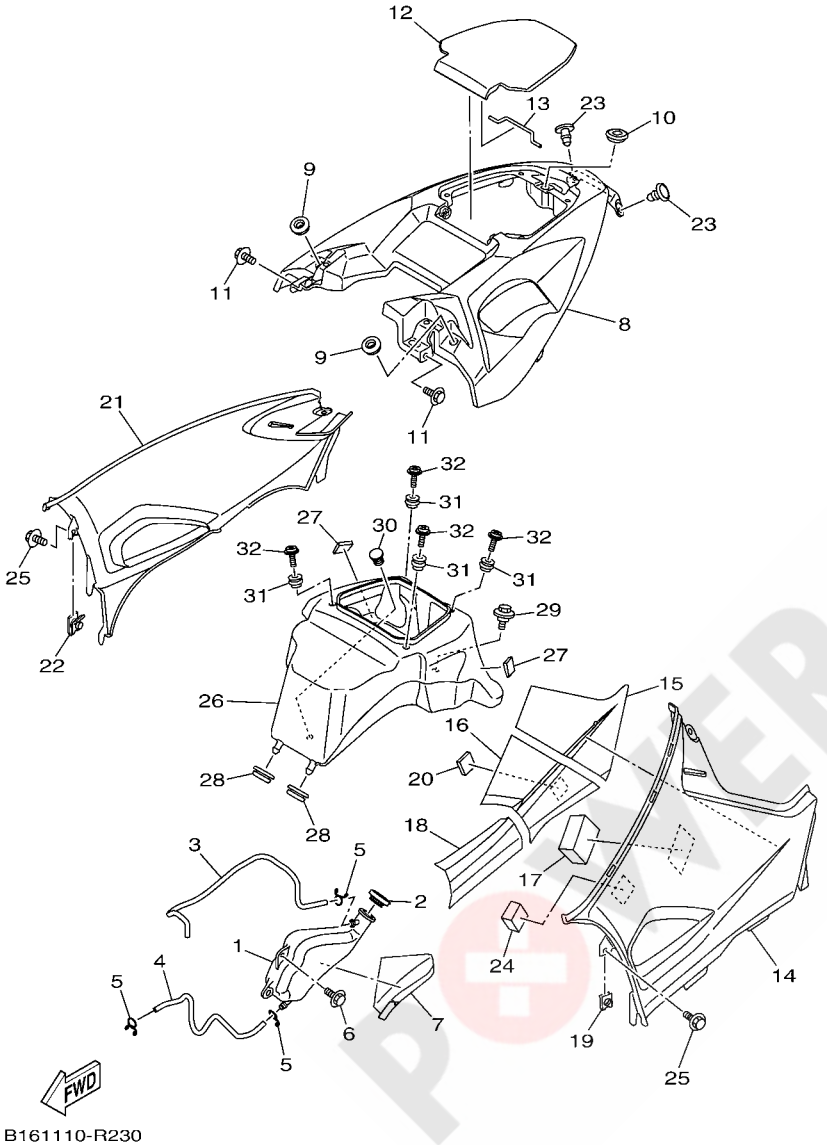

FIG. 23 SIDE COVER

REF. NO.	PART NO.	DESCRIPTION	EUR					REMARKS
24	90520–50800	DAMPER, PLATE	1					
25	90119–06152	BOLT, WITH WASHER	2					
26	B16–F177A–00	BOX	1					
27	90520–10027	DAMPER, PLATE	2					
28	90480–01558	GROMMET	2					
29	90109–06202	BOLT	1					
30	90605–502U1	PLUG, BLIND	1					
31	90179–05523	NUT	4					
32	90159–05053	SCREW, WITH WASHER	4					

POWER PARTS By AKBAR

FIG. 24 REAR ARM

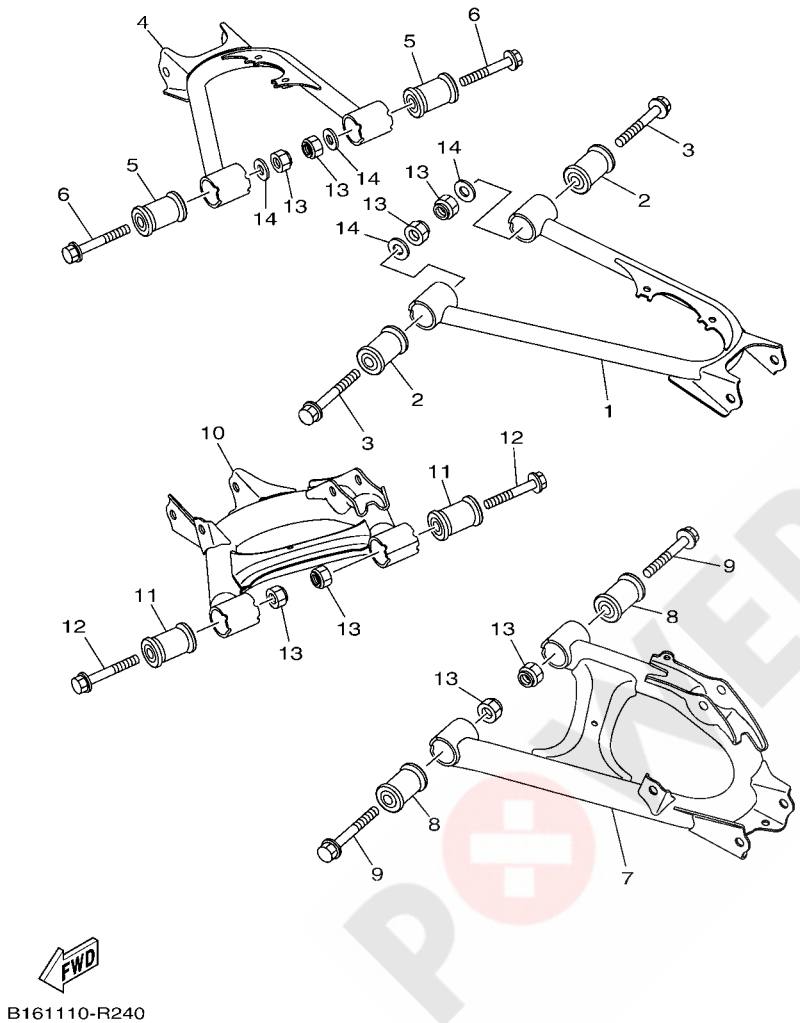

REF. NO.	PART NO.	DESCRIPTION	EUR					REMARKS
1	1HP–F2171–00	ARM, REAR 1	1					
2	1HP–F3526–00	BUSH	2					
3	90105–10011	BOLT, FLANGE	2					
4	1HP–F2172–00	ARM, REAR 2	1					
5	1HP–F3526–00	BUSH	2					
6	90105–10011	BOLT, FLANGE	2					
7	1HP–F217M–00	ARM 1	1					
8	1HP–F3526–00	BUSH	2					
9	90105–10011	BOLT, FLANGE	2					
10	1HP–F217N–00	ARM 2	1					
11	1HP–F3526–00	BUSH	2					
12	90105–10011	BOLT, FLANGE	2					
13	90185–10012	NUT, SELF-LOCKING	8					
14	90201–10035	WASHER, PLATE	4					

POWER PARTS By AKBAR

FIG. 25 REAR SUSPENSION

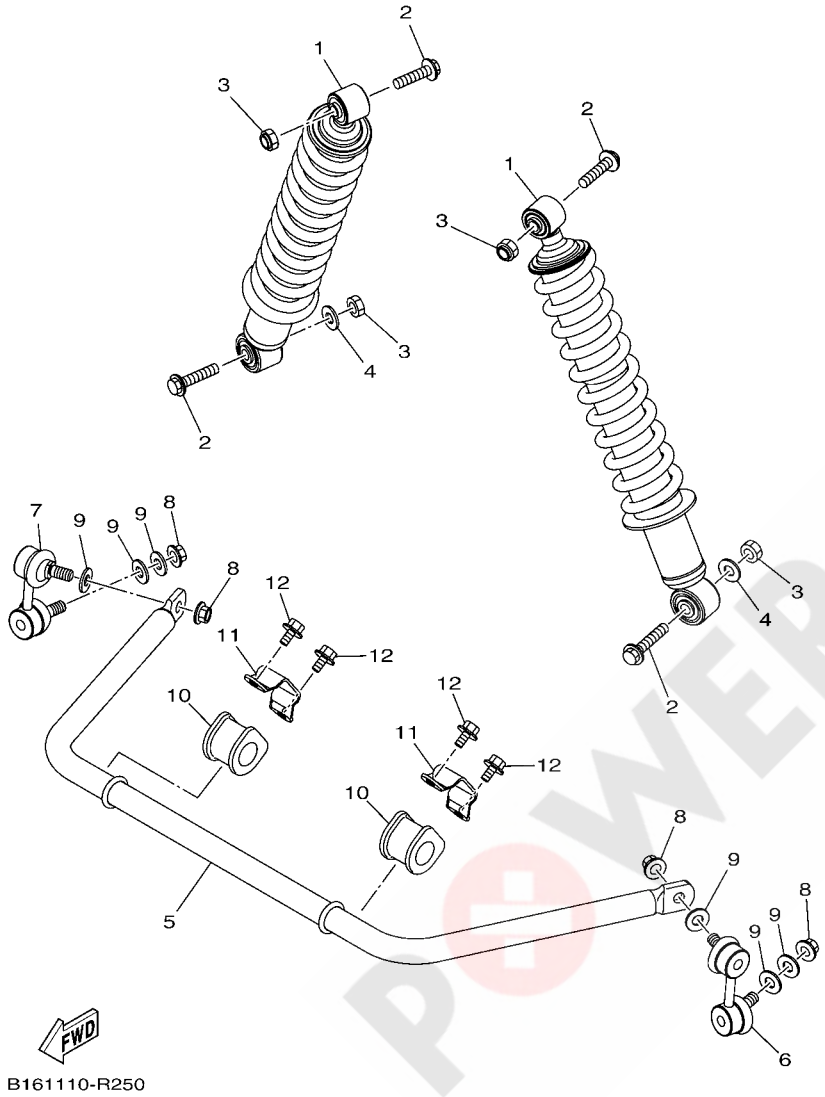

REF. NO.	PART NO.	DESCRIPTION	EUR					REMARKS
1	B16–F2210–00	SHOCK ABSORBER ASSY, REAR	2					
2	90105–10131	BOLT, FLANGE	4					
3	90185–10012	NUT, SELF-LOCKING	4					
4	90201–10035	WASHER, PLATE	2					
5	1HP–G7491–00	BAR, STABILIZER	1					
6	16B–2385L–10	JOINT, STABILIZER 1	1					
7	16B–2385M–10	JOINT, STABILIZER 2	1					
8	95602–10200	NUT, U FLANGE	4					
9	90201–10035	WASHER, PLATE	6					
10	1HP–F386G–00	BUSH, STABILIZER FRONT	2					
11	1HP–F386H–00	COVER, STABILIZER FRONT	2					
12	95812–08014	BOLT, FLANGE	4					

POWER PARTS By AKBAR

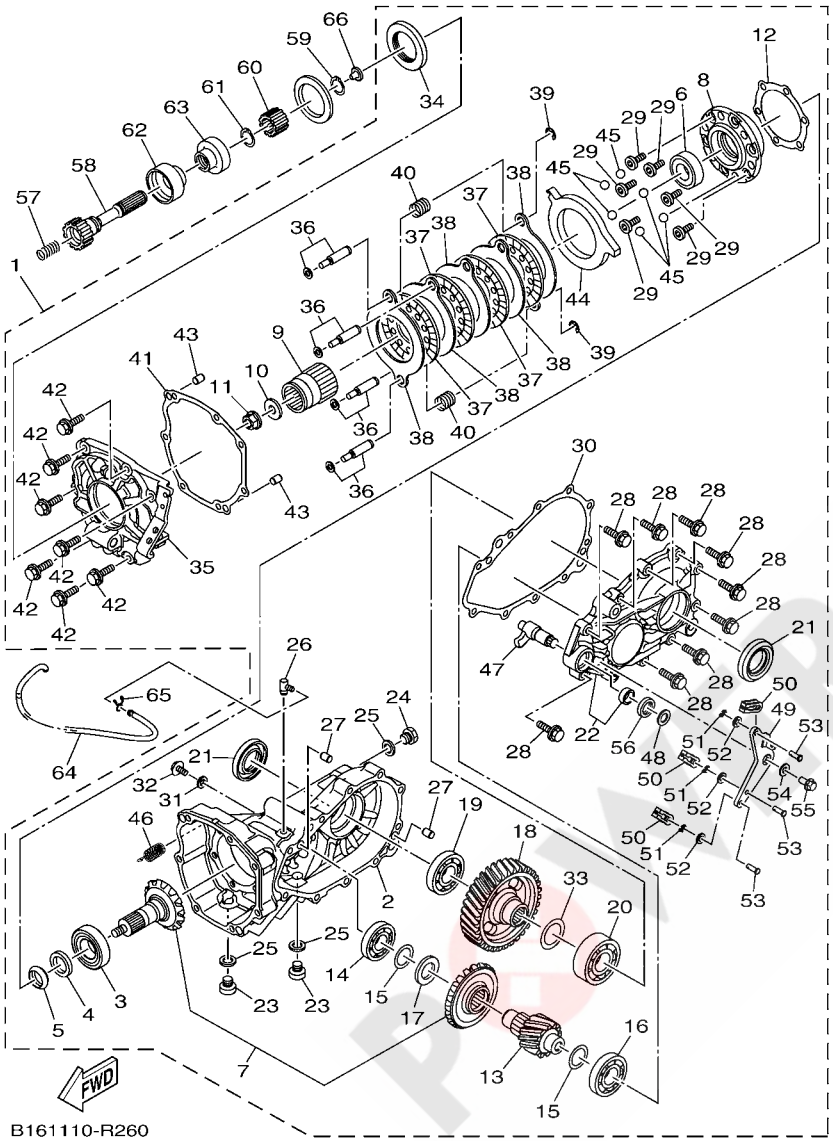

FIG. 26 DRIVE SHAFT

REF. NO.	PART NO.	DESCRIPTION	EUR					REMARKS
1	B16–46101–00	REAR AXLE GEAR CASE ASSY	1					
2	B16–46540–00	REAR AXLE HOUSING COMP.	1					
3	93332–00046	.BEARING	1					
4	90201–25634	.WASHER, PLATE	1					
5	3B4–46129–00	.SPACER, EXPANSION	1					
6	93332–00053	.BEARING	1					
7	3B4–461A0–00	.RING GEAR SET	1					
8	B16–46144–00	.HOUSING, PINION BEARING	1					
9	B16–46126–00	.COUPLING	1					
10	90201–12029	.WASHER, PLATE	1					
11	90179–12005	.NUT	1					
12	B16–46127–00	.SHIM, DRIVE PINION (0.30T)	1					UR
	B16–46127–10	.SHIM, DRIVE PINION (0.35T)	1					UR
	B16–46127–20	.SHIM, DRIVE PINION (0.40T)	1					UR
	B16–46127–30	.SHIM, DRIVE PINION (0.45T)	1					UR
	B16–46127–40	.SHIM, DRIVE PINION (0.50T)	1					UR
	B16–46127–50	.SHIM, DRIVE PINION (0.25T)	1					UR
13	3B4–46316–00	.GEAR, PINION 1	1					
14	93306–205U0	.BEARING	1					
15	3B4–46119–00	.SHIM, THRUST (0.25T)	2					UR
	3B4–46119–10	.SHIM, THRUST (0.30T)	2					UR
	3B4–46119–20	.SHIM, THRUST (0.35T)	2					UR
	3B4–46119–30	.SHIM, THRUST (0.40T)	2					UR
	3B4–46119–40	.SHIM, THRUST (0.45T)	2					UR
	3B4–46119–50	.SHIM, THRUST (0.50T)	2					UR
16	93306–30534	.BEARING	1					
17	3B4–4621F–00	.SHIM,THRUST (4.5T)	1					UR

POLARIS PARTS By Arctic

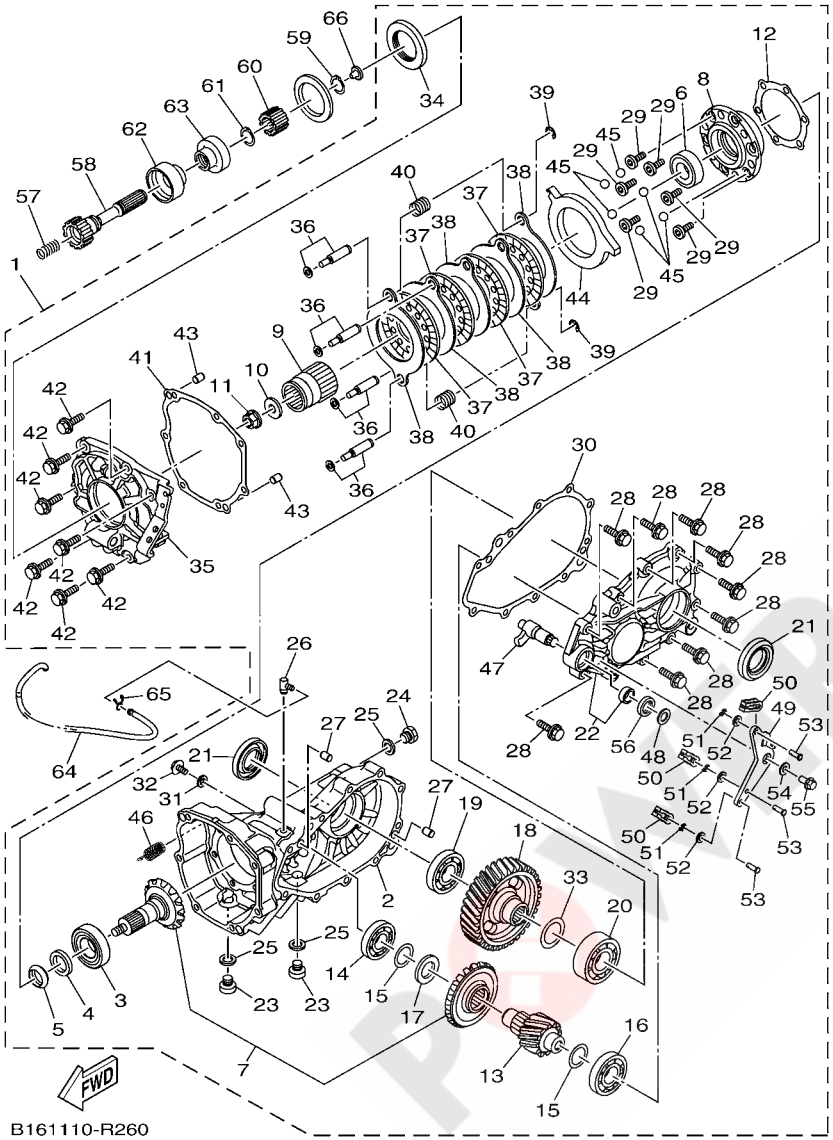

FIG. 26 DRIVE SHAFT

REF. NO.	PART NO.	DESCRIPTION	EUR					REMARKS
17	3B4–4621F–10	.SHIM,THRUST (4.8T)	1					UR
	3B4–4621F–20	.SHIM,THRUST (5.1T)	1					UR
	3B4–4621F–30	.SHIM,THRUST (5.4T)	1					UR
18	3B4–46326–01	.GEAR, WHEEL 1	1					
19	93306–00704	.BEARING	1					
20	93306–207U0	.BEARING	1					
21	93102–35031	.OIL SEAL	2					
22	B16–46550–00	.REAR AXLE HOUSING COMP. 2	1					
23	90340–14002	.PLUG, STRAIGHT SCREW	2					
24	90340–14029	.PLUG, STRAIGHT SCREW	1					
25	214–11198–01	.GASKET	3					
26	5UG–15371–00	.BREATHER	1					
27	93610–14002	.PIN, DOWEL	2					
28	95822–08035	.BOLT, FLANGE	10					
29	90109–08237	.BOLT	6					
30	B16–4631A–00	.GSKT., CASE	1					
31	90201–08087	.WASHER, PLATE	1					
32	95022–08012	.BOLT, FLANGE	1					
33	3B4–46344–00	.SHIM (0.25T)	1					UR
	3B4–46344–10	.SHIM (0.30T)	1					UR
	3B4–46344–20	.SHIM (0.35T)	1					UR
	3B4–46344–30	.SHIM (0.40T)	1					UR
	3B4–46344–40	.SHIM (0.45T)	1					UR
	3B4–46344–50	.SHIM (0.50T)	1					UR
34	93105–45007	.OIL SEAL	1					
35	B16–4613F–00	.COVER 1	1					
36	B16–46155–00	.BOLT 1	4					

POLARIS PARTS By ARALIAD

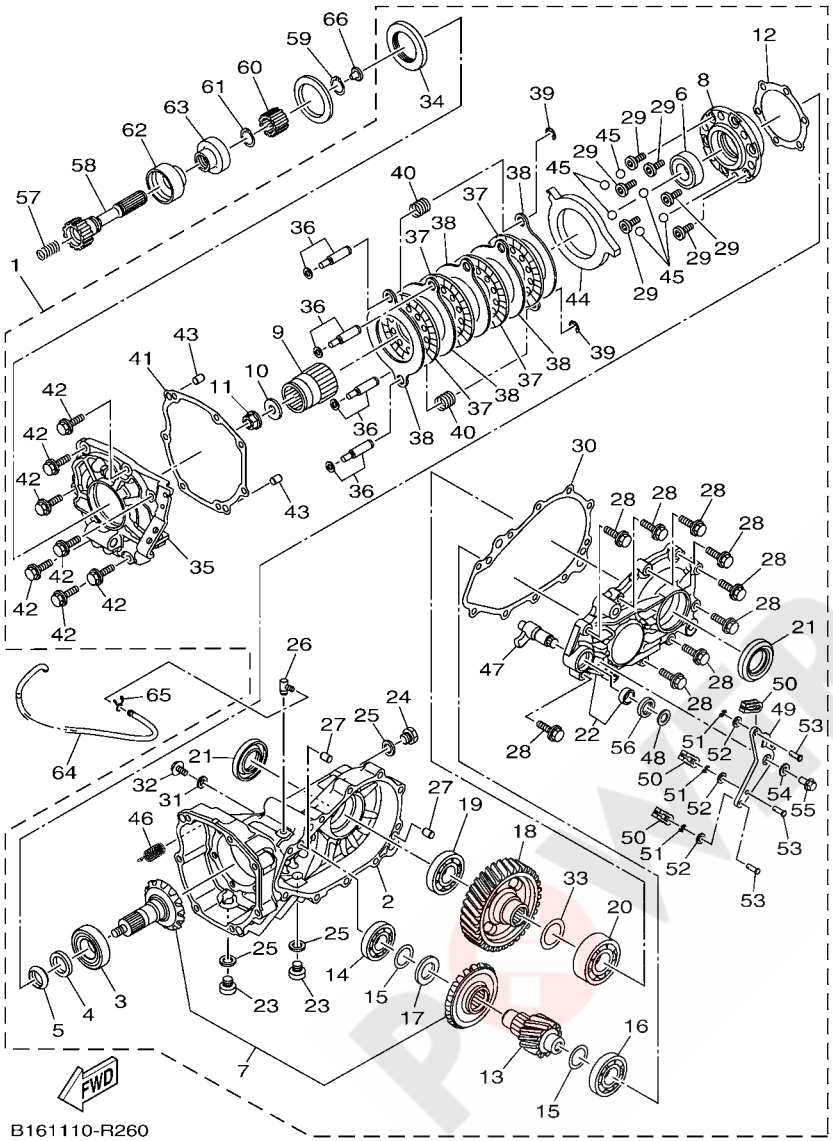

FIG. 26 DRIVE SHAFT

REF. NO.	PART NO.	DESCRIPTION	EUR					REMARKS
37	B16–42525–00	.PLATE, FRICTION	4					
38	B16–46336–00	.PLATE 1	5					
39	99002–09600	.CLIP	2					
40	90501–180A2	.SPRING, COMPRESSION	2					
41	B16–4631E–00	.GASKET, COVER	1					
42	95822–08035	.BOLT, FLANGE	7					
43	93610–14002	.PIN, DOWEL	2					
44	B16–4582E–00	.CAM, PLATE	1					
45	93515–32029	.BALL	6					
46	B16–46375–00	.SPRING, RETURN	1					
47	B16–46265–00	.SHAFT	1					
48	90201–13015	.WASHER, PLATE	1					
49	B16–25355–00	.LEVER, CAMSHAFT	1					
50	B16–26374–00	.END, CABLE 3	3					
51	91402–20012	.PIN, COTTER	3					
52	92902–06600	.WASHER, PLATE	3					
53	91702–06018	.PIN, CLEVIS	3					
54	92902–08200	.WASHER	1					
55	95822–08016	.BOLT, FLANGE	1					
56	93102–17008	.OIL SEAL	1					
57	90501–20361	SPRING, COMPRESSION	1					
58	1HP–G6172–00	SHAFT, DRIVE	1					
59	99009–19400	CIRCLIP	1					
60	5KM–46126–00	COUPLING	1					
61	93410–22039	CIRCLIP	1					
62	5KM–46137–00	SEAL 2	1					
63	5KM–46136–00	SEAL 1	1					

POWER PARTS By AKAWO

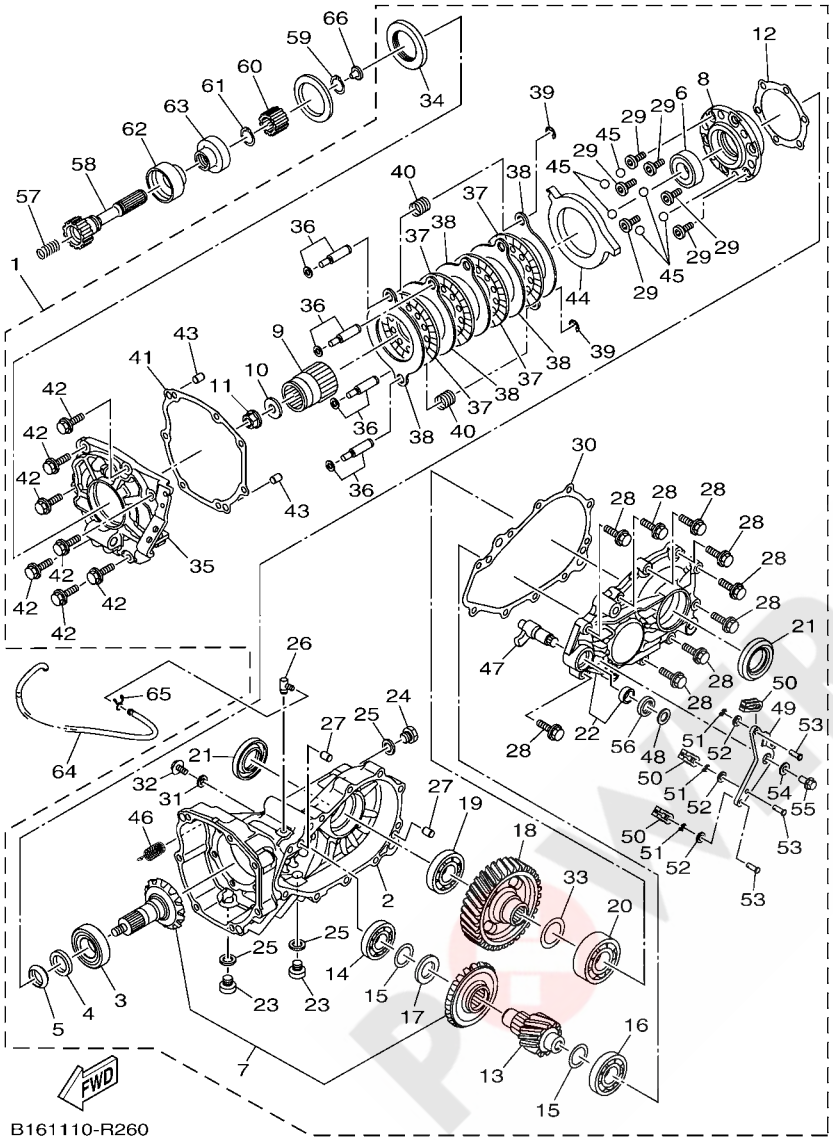

FIG. 26 DRIVE SHAFT

REF. NO.	PART NO.	DESCRIPTION	EUR					REMARKS
64	90445–074F6	HOSE (L1300)	1					
65	90467–07029	CLIP	1					
66	5KM–46559–00	DAMPER	1					

POLAR PARTS By AKBLAD

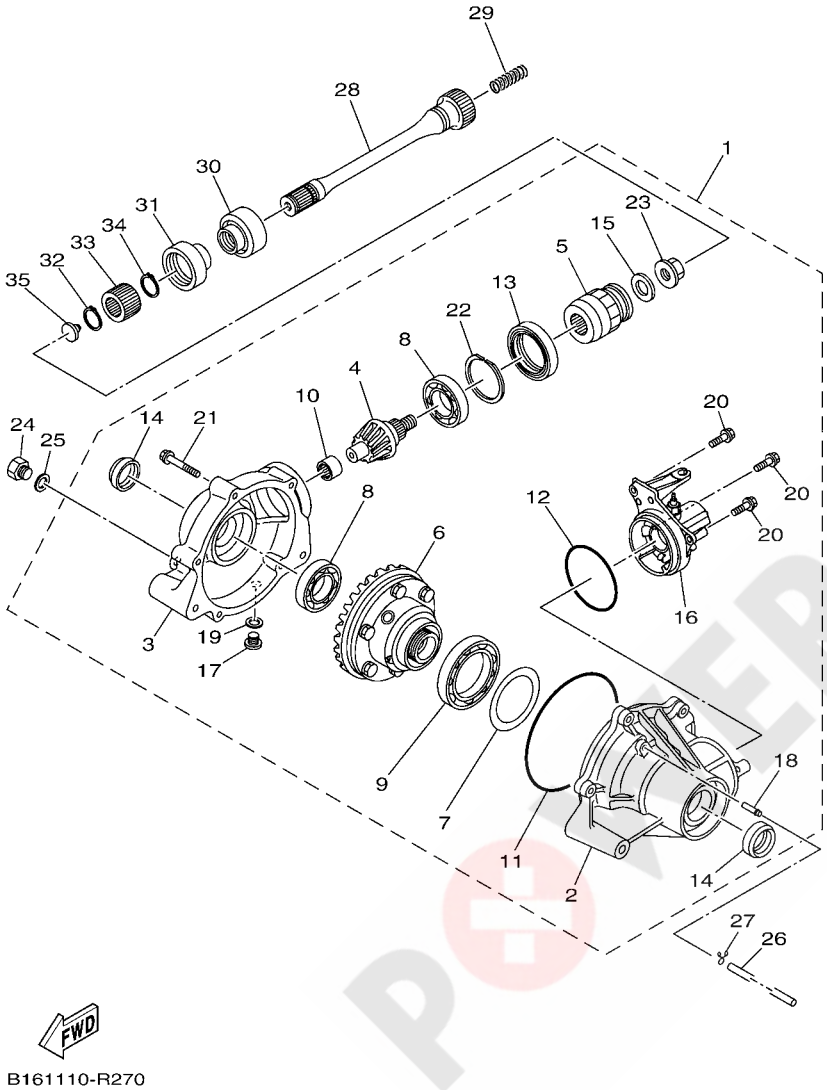

FIG. 27 FRONT DIFFERENTIAL

REF. NO.	PART NO.	DESCRIPTION	EUR					REMARKS
1	B16–46160–00	FRONT AXLE GEAR CASE COMP.	1					
2	3B4–46162–01	.HOUSING, BEARING 2	1					
3	3B4–46161–00	.HOUSING, SHAFT DRIVE 2	1					
4	1XD–46141–00	.PINION, DRIVE 2	1					
5	3B4–67839–10	.CUPLING	1					
6	B16–46470–00	.LIMITED SLIP DIFF. ASSY	1					
7	3B4–46117–00	.SHIM, RING GEAR (0.1T)	1					UR
	3B4–46117–10	.SHIM, RING GEAR (0.2T)	1					UR
	3B4–46117–20	.SHIM, RING GEAR (0.3T)	1					UR
	3B4–46117–30	.SHIM, RING GEAR (0.4T)	1					UR
8	93306–00613	.BEARING	2					
9	3B4–46164–00	.BEARING 1	1					
10	3B4–46166–00	.BEARING 3	1					
11	3B4–46134–00	.O-RING 1	1					
12	3B4–46135–00	.O-RING 2	1					
13	93105–46001	.OIL SEAL	1					
14	3B4–46163–00	.SEAL, OIL 1	2					
15	3B4–47359–00	.WASHER	1					
16	B16–46370–00	.SHIFT ASSY	1					
17	90340–10001	.PLUG, STRAIGHT SCREW	1					
18	5GH–46293–00	.TUBE	1					
19	90430–10003	.GASKET	1					
20	95812–06014	.BOLT, FLANGE	3					
21	95812–08040	.BOLT, FLANGE	5					
22	3B4–46142–00	.RING,HOLE SNAP 1	1					
23	4WV–46145–10	.NUT 1	1					
24	90340–14029	PLUG, STRAIGHT SCREW	1					

POWER PARTS By AKWAD

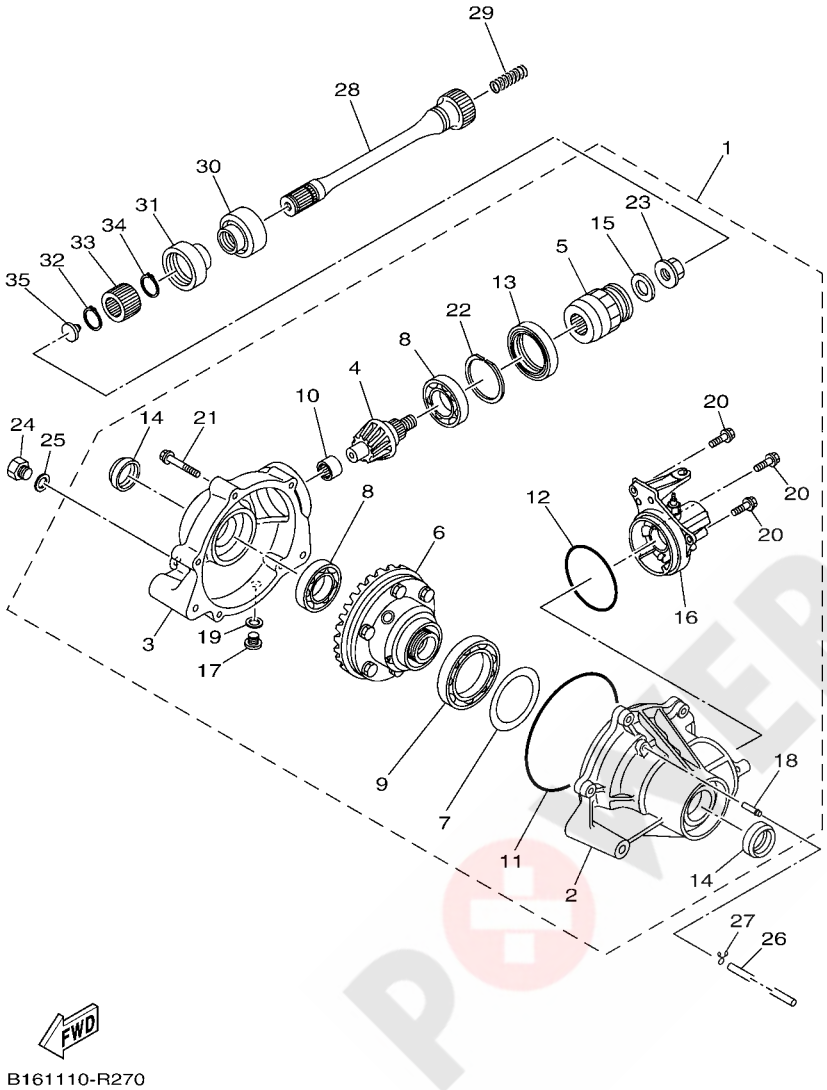

FIG. 27 FRONT DIFFERENTIAL

REF. NO.	PART NO.	DESCRIPTION	EUR					REMARKS
25	214–11198–01	GASKET	1					
26	90445–070F1	HOSE (L950)	1					
27	90467–07029	CLIP	1					
28	1HP–G6173–00	SHAFT, DRIVE 2	1					
29	90501–20361	SPRING, COMPRESSION	1					
30	5KM–46137–00	SEAL 2	1					
31	5KM–46136–00	SEAL 1	1					
32	99009–19400	CIRCLIP	1					
33	5KM–46126–00	COUPLING	1					
34	93410–22039	CIRCLIP	1					
35	5KM–46559–00	DAMPER	1					

POWER PARTS By AKAMO

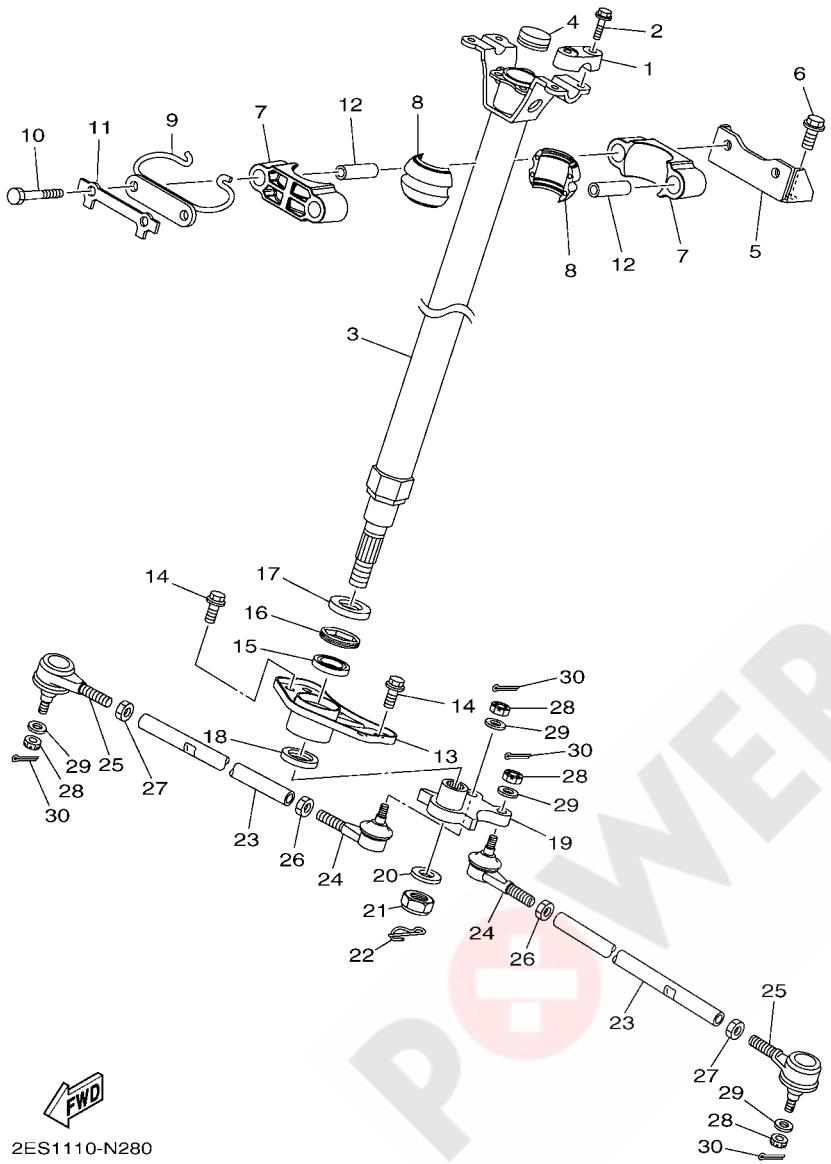

FIG. 28 STEERING

REF. NO.	PART NO.	DESCRIPTION	EUR					REMARKS
1	8K1–23814–00	HOLDER, HANDLE	2					
2	95812–08030	BOLT, FLANGE	4					
3	1ND–F3813–10	COLUMN, STEERING 2	1					
4	90336–28053	PLUG, TAPER	1					
5	1HP–F2517–10	SUPT., STRG. COLUMN	1					
6	90105–10876	BOLT, FLANGE	2					
7	1CT–F1957–00	BRACKET, STEERING 2	2					
8	1CT–F3812–00	BEARING, STEERING	2					
9	1CT–F3868–00	BRACKET, STEERING LOWER	1					
10	97012–08080	BOLT	2					
11	1CT–F3894–00	WASHER, LOCK 1	1					
12	1CT–F1545–00	COLLAR, 2	2					
13	1CU–F131H–00	BRACKET, STEERING 1	1					
14	90105–08237	BOLT, FLANGE	4					
15	93306–203YN	BEARING	1					
16	93102–25081	OIL SEAL	1					
17	93102–25099	OIL SEAL	1					
18	2GU–23872–00	HOLDER, BEARING	1					
19	B16–F3816–00	ARM, PITMAN	1					
20	90201–14021	WASHER, PLATE	1					
21	90185–14009	NUT, SELF-LOCKING	1					
22	91402–20025	PIN, COTTER	1					
23	5KM–23831–00	ROD, TIE	2					
24	1UY–23841–01	JOINT, UNIVERSAL 1	2					
25	1UY–23845–01	JOINT, UNIVERSAL 2	2					
26	95302–10700	NUT, HEXAGON	2					
27	90170–10010	NUT	2					(L.H. THREAD)

POWER PARTS By akawd

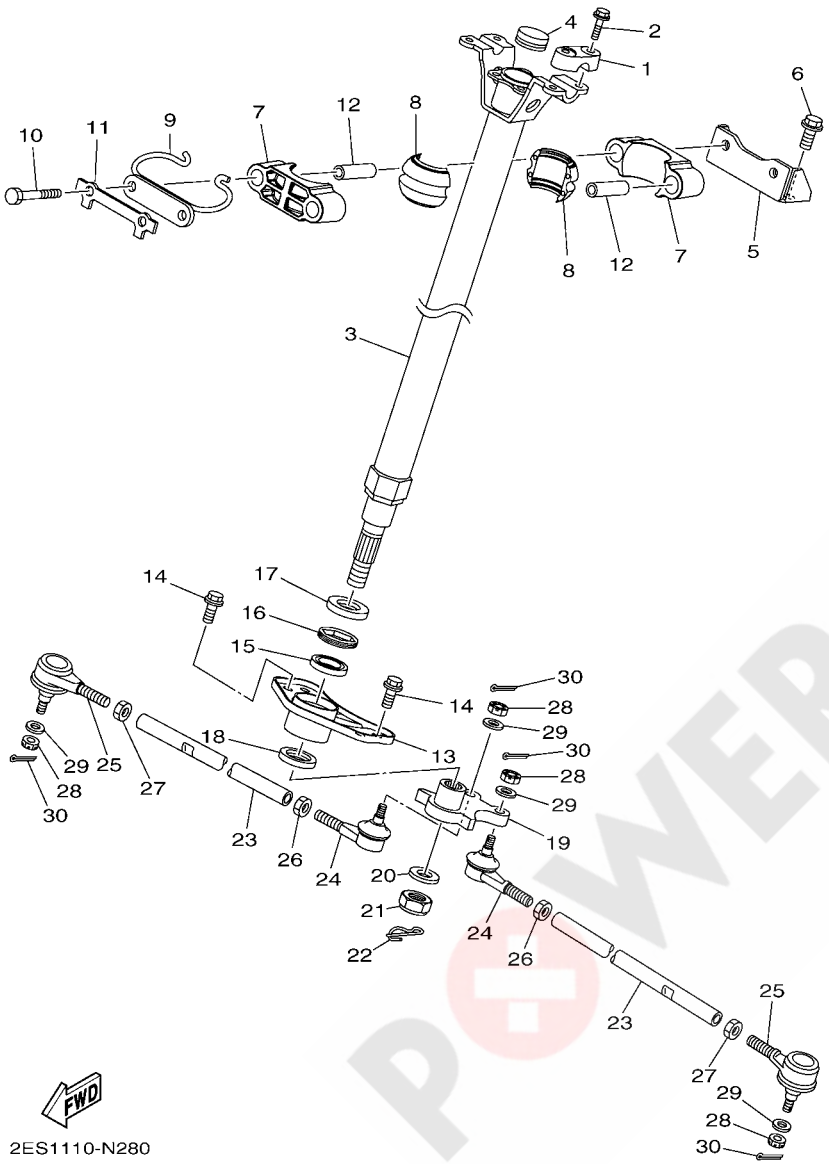

FIG. 28 STEERING

REF. NO.	PART NO.	DESCRIPTION	EUR					REMARKS
28	90171–10001	NUT, CASTLE	4					
29	90209–10229	WASHER	4					
30	91401–20020	PIN, COTTER	4					

POWER PARTS By 4X4UAD

FIG. 29 FRONT SUSPENSION & WHEEL

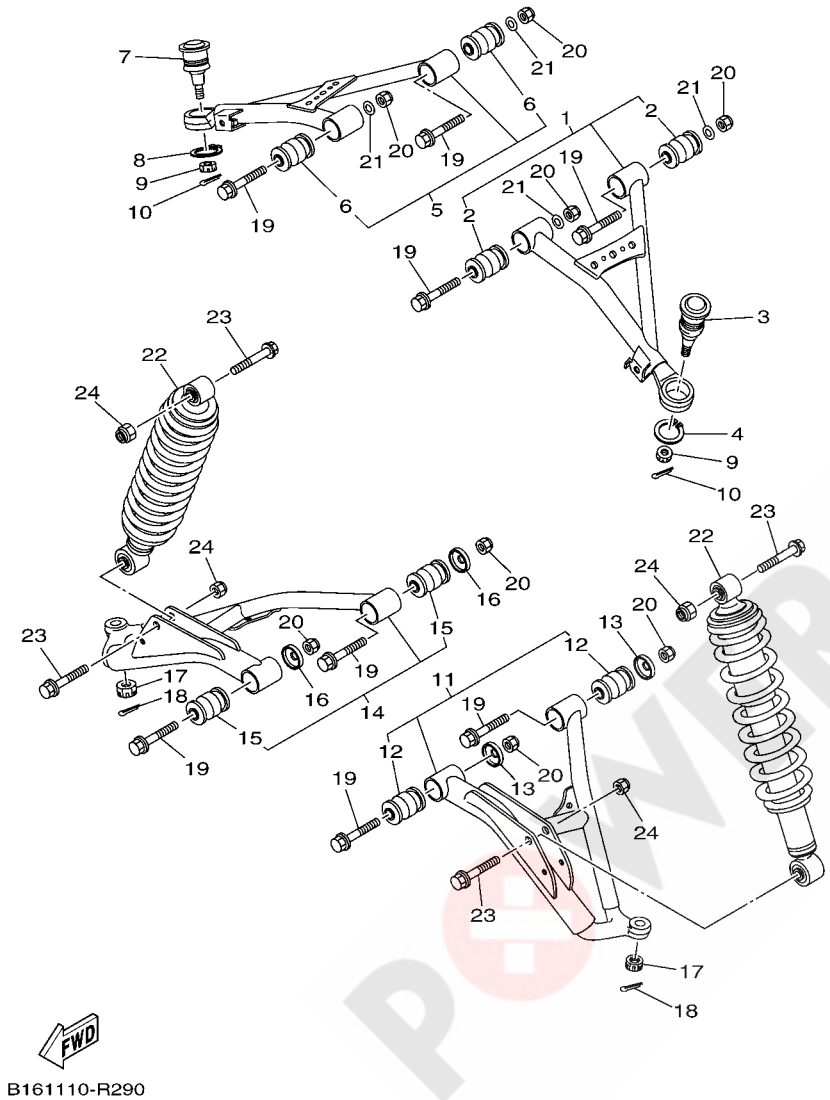

REF. NO.	PART NO.	DESCRIPTION	EUR					REMARKS
1	1HP–F3540–00	FRONT UPPER ARM COMP. (LEFT)	1					
2	1HP–F3526–00	.BUSH	2					
3	3B4–23579–01	BALL JOINT 2	1					
4	99009–30400	CIRCLIP	1					
5	1HP–F3550–00	FRONT UPPER ARM COMP. (RIGHT)	1					
6	1HP–F3526–00	.BUSH	2					
7	3B4–23579–01	BALL JOINT 2	1					
8	99009–30400	CIRCLIP	1					
9	90171–12001	NUT, CASTLE	2					
10	91490–25020	PIN. COTTER	2					
11	1HP–F3570–00	FRONT LOWER ARM COMP. (LEFT)	1					
12	1HP–F3526–00	.BUSH	2					
13	5KM–22149–10	WASHER	2					
14	1HP–F3580–00	FRONT LOWER ARM COMP. (RIGHT)	1					
15	1HP–F3526–00	.BUSH	2					
16	5KM–22149–10	WASHER	2					
17	90171–12001	NUT, CASTLE	2					
18	91490–25020	PIN. COTTER	2					
19	90105–10011	BOLT, FLANGE	8					
20	90185–10012	NUT, SELF-LOCKING	8					
21	90201–10035	WASHER, PLATE	4					
22	B16–F3350–00	SHOCK ABSORBER ASSY	2					
23	90105–10131	BOLT, FLANGE	4					
24	90185–10012	NUT, SELF-LOCKING	4					

POWER PARTS By Arsam

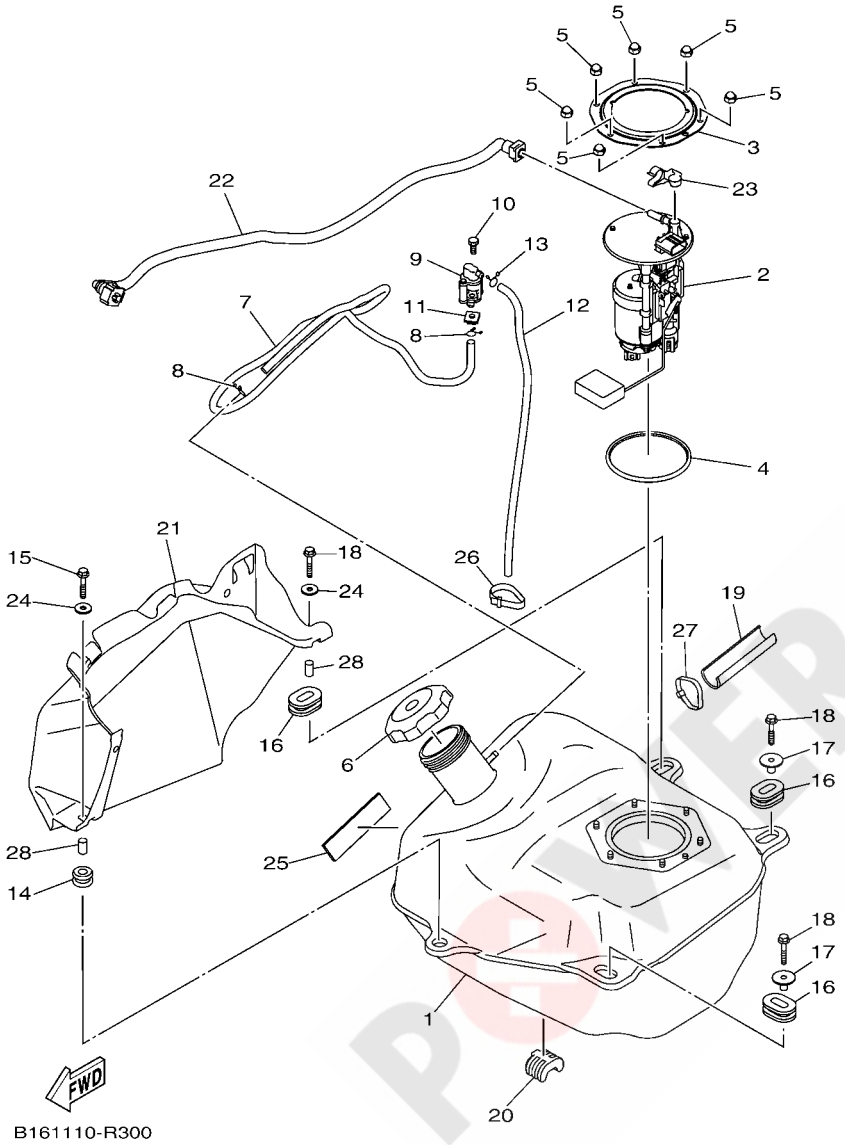

FIG. 30 FUEL TANK

REF. NO.	PART NO.	DESCRIPTION	EUR					REMARKS
1	B16–F4110–00	FUEL TANK COMP.	1					
2	B16–13907–00	FUEL PUMP COMP.	1					
3	3B4–24491–00	BRACKET, FUEL PUMP	1					
4	1S3–24486–00	O-RING	1					
5	95302–06800	NUT, CROWN	6					
6	2P5–24610–00	CAP ASSY	1					
7	90445–09829	HOSE (L1030)	1					
8	90467–09006	CLIP	2					
9	28P–24380–00	PIPE JOINT ASSY	1					
10	97002–06016	BOLT, HEXAGON	1					
11	90183–061A3	NUT, SPRING	1					
12	90445–09828	HOSE (L470)	1					
13	90467–09006	CLIP	1					
14	90480–18290	GROMMET	1					
15	95802–06035	BOLT, FLANGE	1					
16	90480–01400	GROMMET	3					
17	90387–07021	COLLAR	2					
18	95802–06035	BOLT, FLANGE	3					
19	B16–F4182–01	DAMPER, LOCATING 2	1					
20	B16–F4181–00	DAMPER, LOCATING 1	1					
21	B16–F4141–00	PROTECTOR, FUEL TANK	1					
22	B16–13971–00	PIPE, FUEL 1	1					
23	90464–14004	CLAMP	1					
24	90201–06036	WASHER, PLATE	2					
25	2PA–21541–00	DAMPER 1	1					
26	90464–25003	CLAMP	1					
27	90464–32801	CLAMP	1					

POWER PARTS By AKBAR

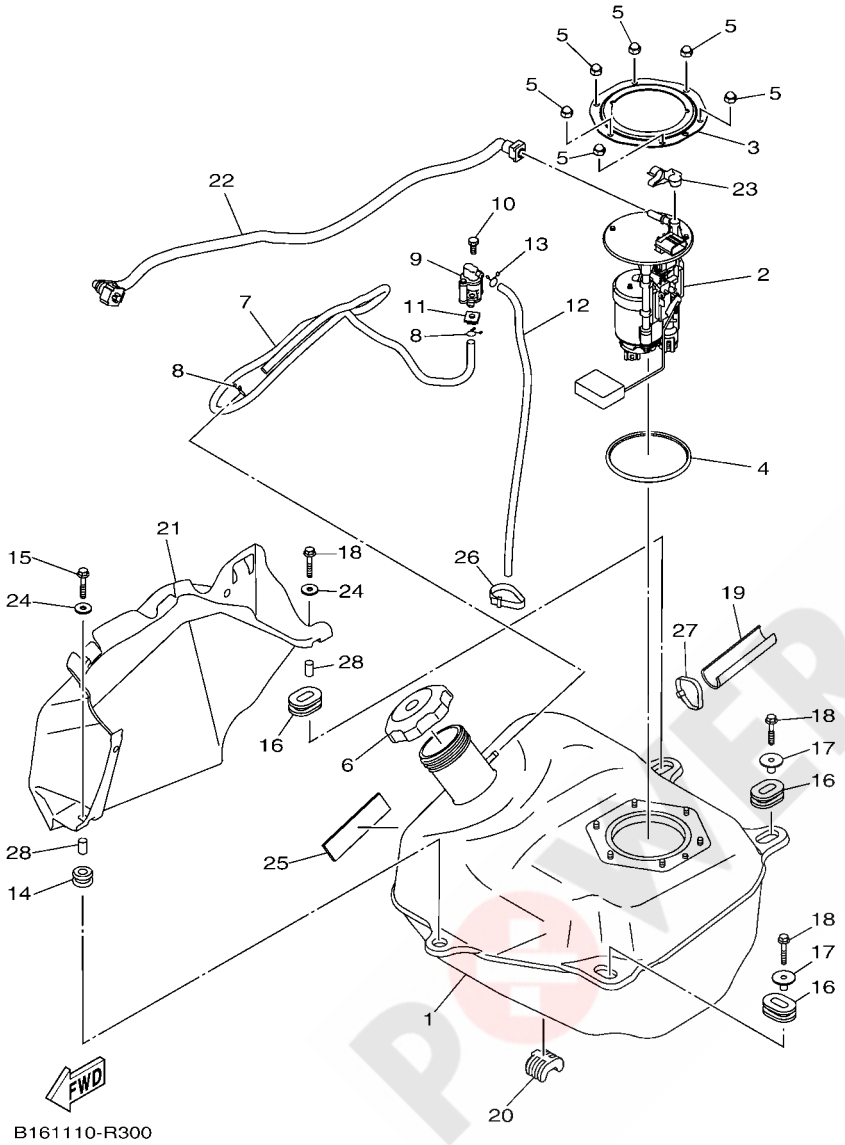

FIG. 30 FUEL TANK

REF. NO.	PART NO.	DESCRIPTION	EUR					REMARKS
28	90387–06M19	COLLAR	2					

POWER PARTS By AKBLAD

FIG. 31 SEAT

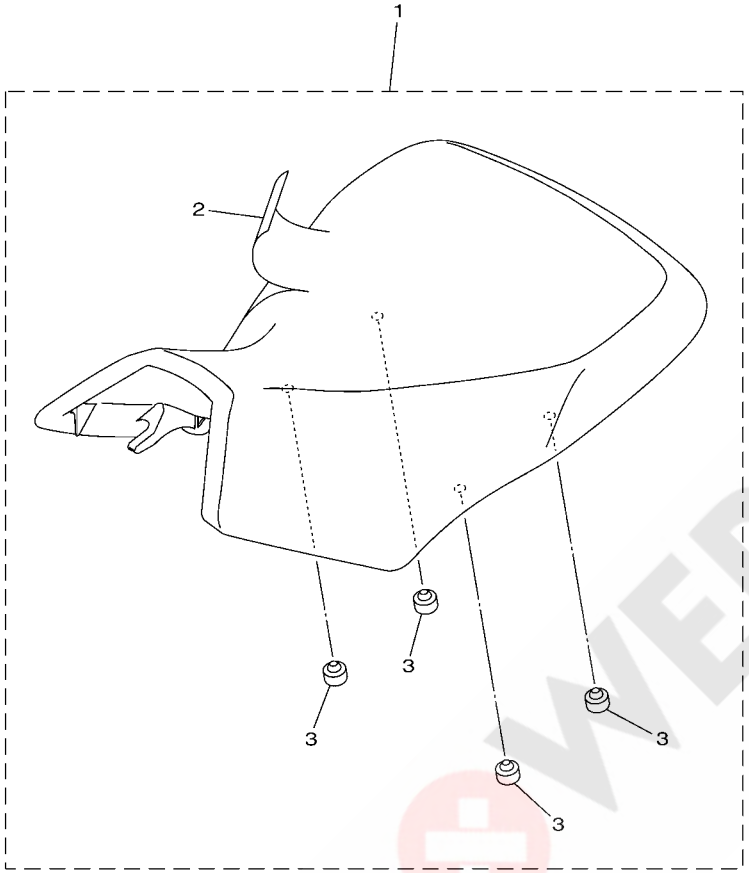

B161110-R310

REF. NO.	PART NO.	DESCRIPTION	EUR					REMARKS
1	B16–F4710–10	SINGLE SEAT ASSY	1					
2	B16–F470F–10	.SEAT COVER COMP.	1					
3	4XE–F4747–00	.DAMPER, SEAT	4					

POWER PARTS By 4x4QUAD

FIG. 32 FRONT WHEEL

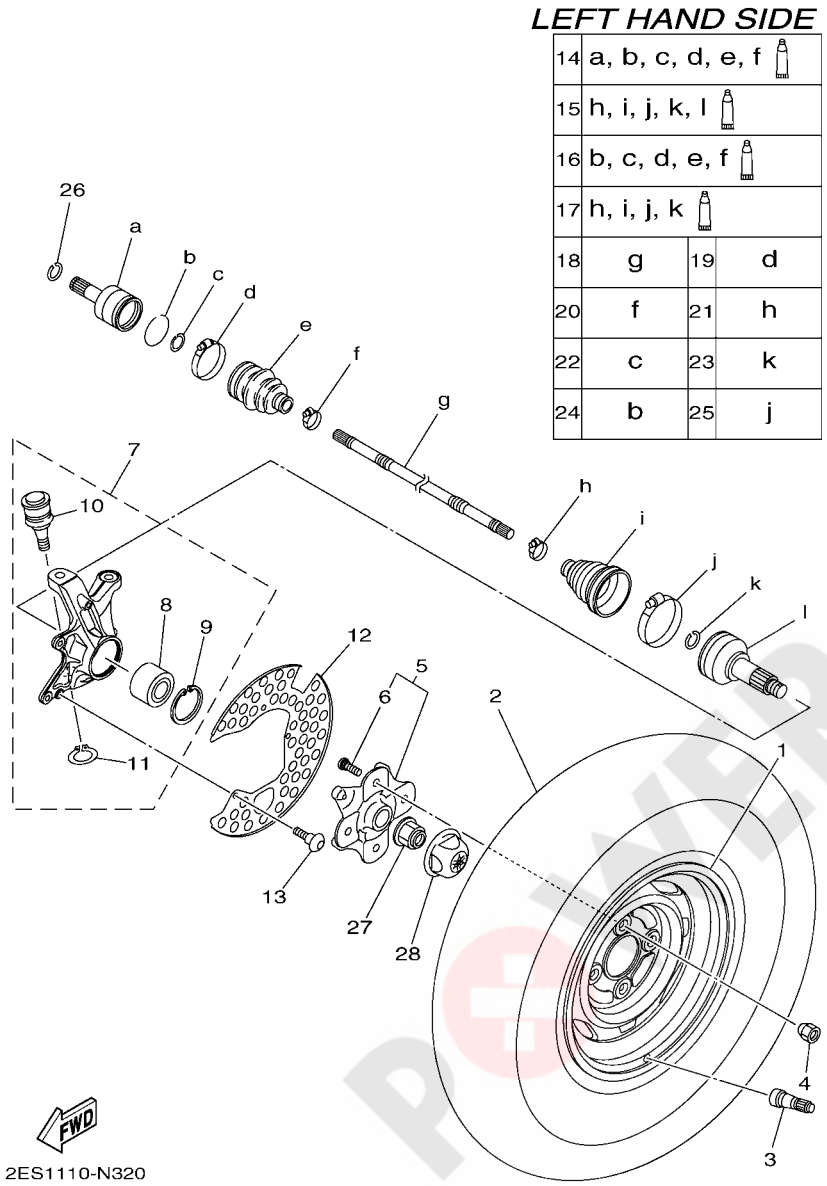

REF. NO.	PART NO.	DESCRIPTION	EUR					REMARKS
1	B16–F5180–00	WHEEL COMP.	1					
2	94108–12817	TIRE (AT25X8-12 MU19**TL)	1					MAXXIS
3	93900–00813	VALVE, RIM (TR413)	1					MAXXIS
4	90179–10020	NUT	4					
5	B16–F510D–00	HUB ASSY 2	1					
6	90114–10014	.BOLT, SERRATION	4					
7	2BG–F3501–10	STEERING KNUCKLE ASSY (LEFT)	1					
8	93305–00602	.BEARING	1					
9	99009–55500	.CIRCLIP	1					
10	3B4–23579–01	.BALL JOINT 2	1					
11	99009–30400	.CIRCLIP	1					
12	1HP–F514A–00	RING, WHEEL 1	1					
13	98902–06010	SCREW, BIND	3					
14	28P–2510J–01	DOUBLE OFF SET JOINT	1					
15	28P–2510F–04	BALL JOINT SET	1					
16	28P–2510H–01	BOOT SET(DOUBLE OFFSET JOINT)	1					
17	28P–2510G–00	BOOT SET (BALL JOINT)	1					
18	28P–2518E–00	SHAFT	1					
19	3B4–2511H–00	BOOT BAND(DOUBLE OFFSET JOINT)	1					
20	3B4–2512G–00	BOOT BAND (SMALL)	1					
21	28P–2512G–00	BOOT BAND (SMALL)	1					
22	3B4–2512J–00	SNAP RING	1					
23	3B4–2512H–00	CIRCLIP	1					
24	3B4–25182–00	CIRCLIP	1					
25	28P–2511H–00	BOOT BAND(DOUBLE OFFSET JOINT)	1					
26	93450–22119	CIRCLIP	1					
27	90179–20016	NUT	1					

POWER PARTS By AKBAR

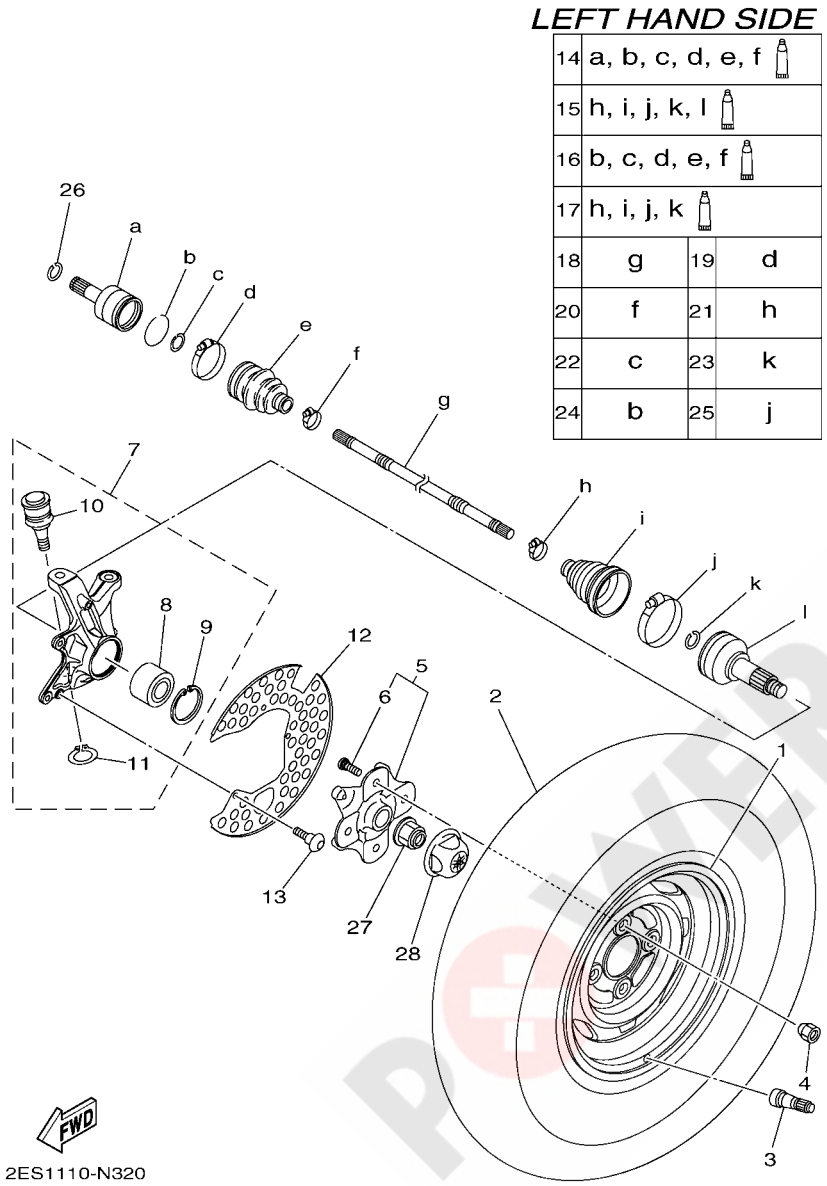

FIG. 32 FRONT WHEEL

REF. NO.	PART NO.	DESCRIPTION	EUR					REMARKS
28	1HP–F512A–00	CAP, WHEEL	1					

POWER PARTS By AKBLAD

FIG. 33 FRONT WHEEL 2

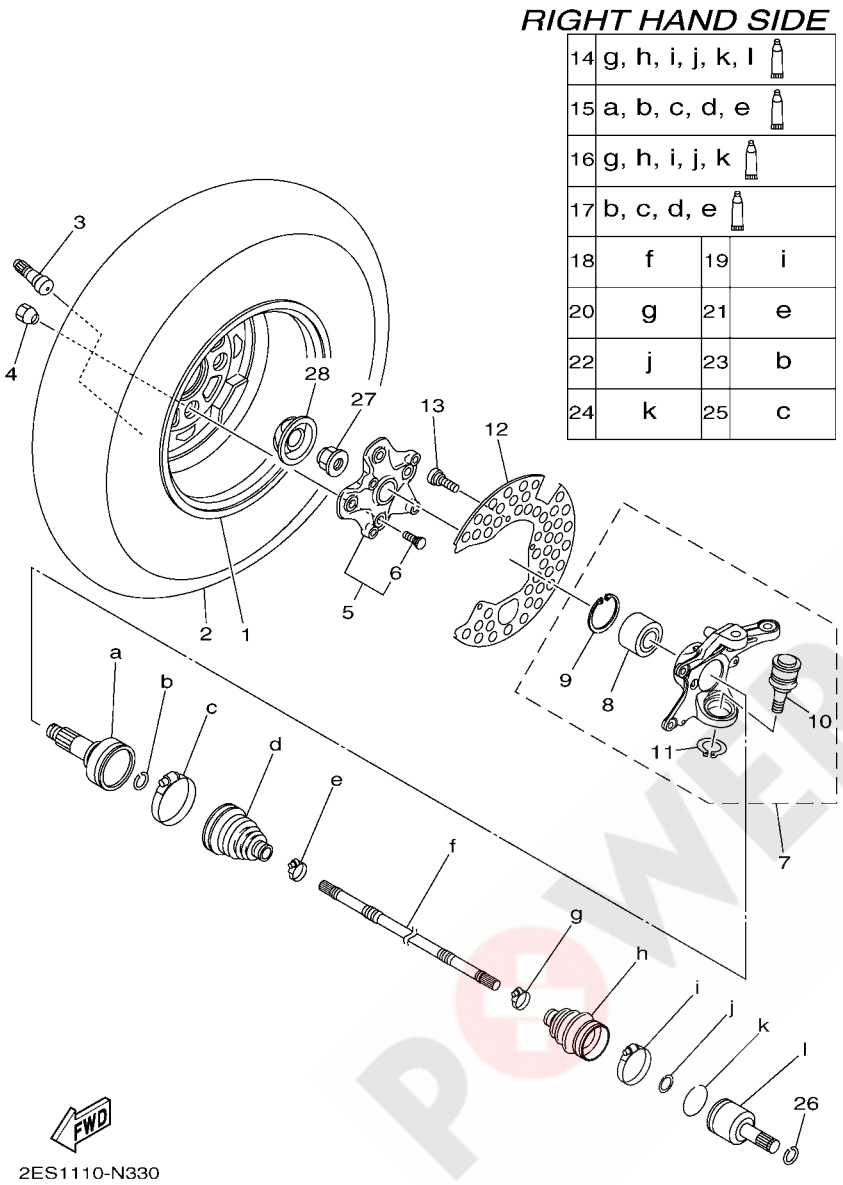

REF. NO.	PART NO.	DESCRIPTION	EUR					REMARKS
1	B16–F5180–00	WHEEL COMP.	1					
2	94108–12817	TIRE (AT25X8-12 MU19**TL)	1					MAXXIS
3	93900–00813	VALVE, RIM (TR413)	1					MAXXIS
4	90179–10020	NUT	4					
5	B16–F510D–00	HUB ASSY 2	1					
6	90114–10014	.BOLT, SERRATION	4					
7	2BG–F3502–10	STEERING KNUCKLE ASSY (RIGHT)	1					
8	93305–00602	.BEARING	1					
9	99009–55500	.CIRCLIP	1					
10	3B4–23579–01	.BALL JOINT 2	1					
11	99009–30400	.CIRCLIP	1					
12	1HP–F514A–00	RING, WHEEL 1	1					
13	98902–06010	SCREW, BIND	3					
14	28P–2510J–01	DOUBLE OFF SET JOINT	1					
15	28P–2510F–04	BALL JOINT SET	1					
16	28P–2510H–01	BOOT SET(DOUBLE OFFSET JOINT)	1					
17	28P–2510G–00	BOOT SET (BALL JOINT)	1					
18	28P–2518E–00	SHAFT	1					
19	3B4–2511H–00	BOOT BAND(DOUBLE OFFSET JOINT)	1					
20	3B4–2512G–00	BOOT BAND (SMALL)	1					
21	28P–2512G–00	BOOT BAND (SMALL)	1					
22	3B4–2512J–00	SNAP RING	1					
23	3B4–2512H–00	CIRCLIP	1					
24	3B4–25182–00	CIRCLIP	1					
25	28P–2511H–00	BOOT BAND(DOUBLE OFFSET JOINT)	1					
26	93450–22119	CIRCLIP	1					
27	90179–20016	NUT	1					

POWER PARTS By AKBAR

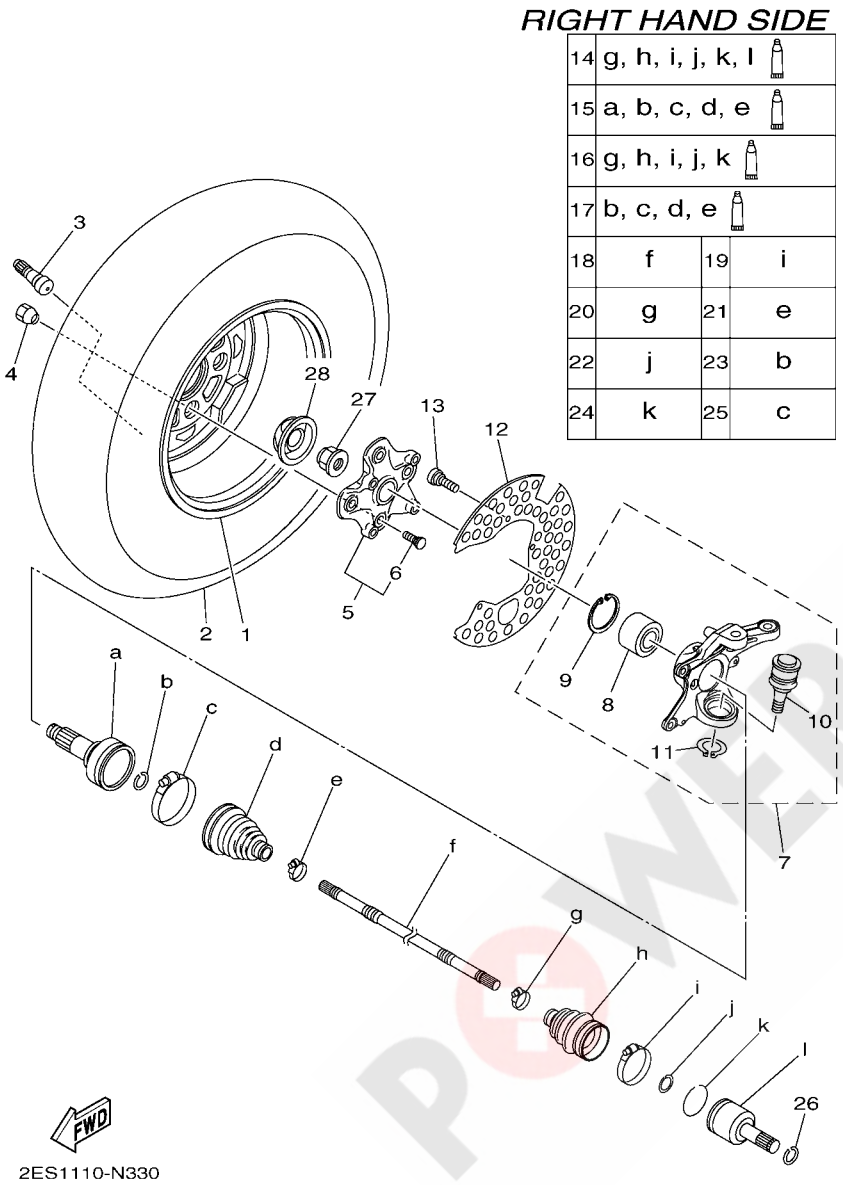

FIG. 33 FRONT WHEEL 2

REF. NO.	PART NO.	DESCRIPTION	EUR					REMARKS
28	1HP–F512A–00	CAP, WHEEL	1					

POWER PARTS By AKBLAD

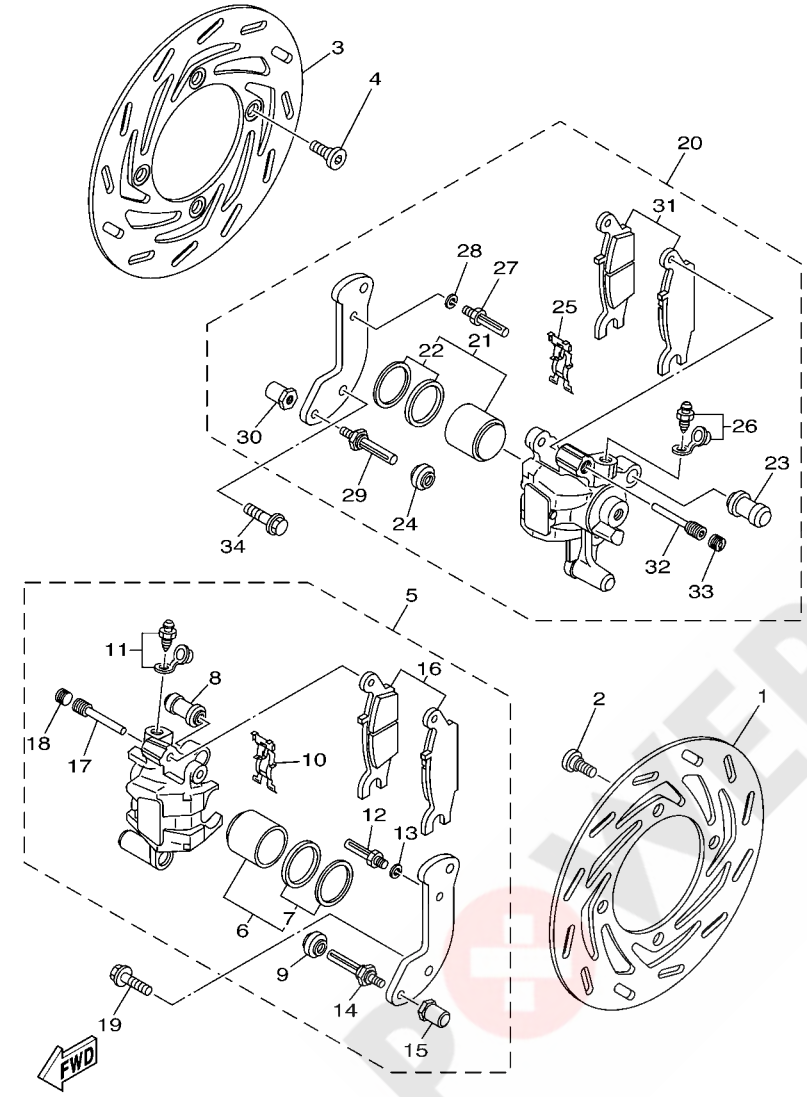

FIG. 34 FRONT BRAKE CALIPER

REF. NO.	PART NO.	DESCRIPTION	EUR					REMARKS
1	1HP–F582T–00	DISC, BRAKE (LEFT)	1					
2	90109–08101	BOLT	4					
3	1HP–F582T–00	DISC, BRAKE (LEFT)	1					
4	90109–08101	BOLT	4					
5	3B4–2580T–02	CALIPER ASSY (LEFT)	1					
6	3B4–W0057–00	.PISTON ASSY, CALIPER	1					
7	3B4–W0047–00	..CALIPER SEAL KIT	1					
8	1UY–25937–51	.BOOT 2	1					
9	3JD–25917–00	.BOOT, CALIPER	1					
10	5DH–25919–00	.SUPPORT, PAD	1					
11	1UY–W0048–50	.BLEED SCREW KIT	1					
12	1UY–25926–51	.BOLT	1					
13	1UY–25938–51	.WASHER, SPRING	1					
14	3JD–25926–00	.BOLT	1					
15	3JD–25961–00	.NUT	1					
16	3B4–W0045–00	.BRAKE PAD KIT	1					
17	5DH–25933–00	.PIN, PAD	1					
18	5DH–25916–00	.PLUG	1					
19	90105–08161	BOLT, FLANGE	2					
20	3B4–2580U–02	CALIPER ASSY (RIGHT)	1					
21	3B4–W0057–00	.PISTON ASSY, CALIPER	1					
22	3B4–W0047–00	..CALIPER SEAL KIT	1					
23	1UY–25937–51	.BOOT 2	1					
24	3JD–25917–00	.BOOT, CALIPER	1					
25	5DH–25919–00	.SUPPORT, PAD	1					
26	1UY–W0048–50	.BLEED SCREW KIT	1					
27	1UY–25926–51	.BOLT	1					

POWER PARTS By 4x4&MD

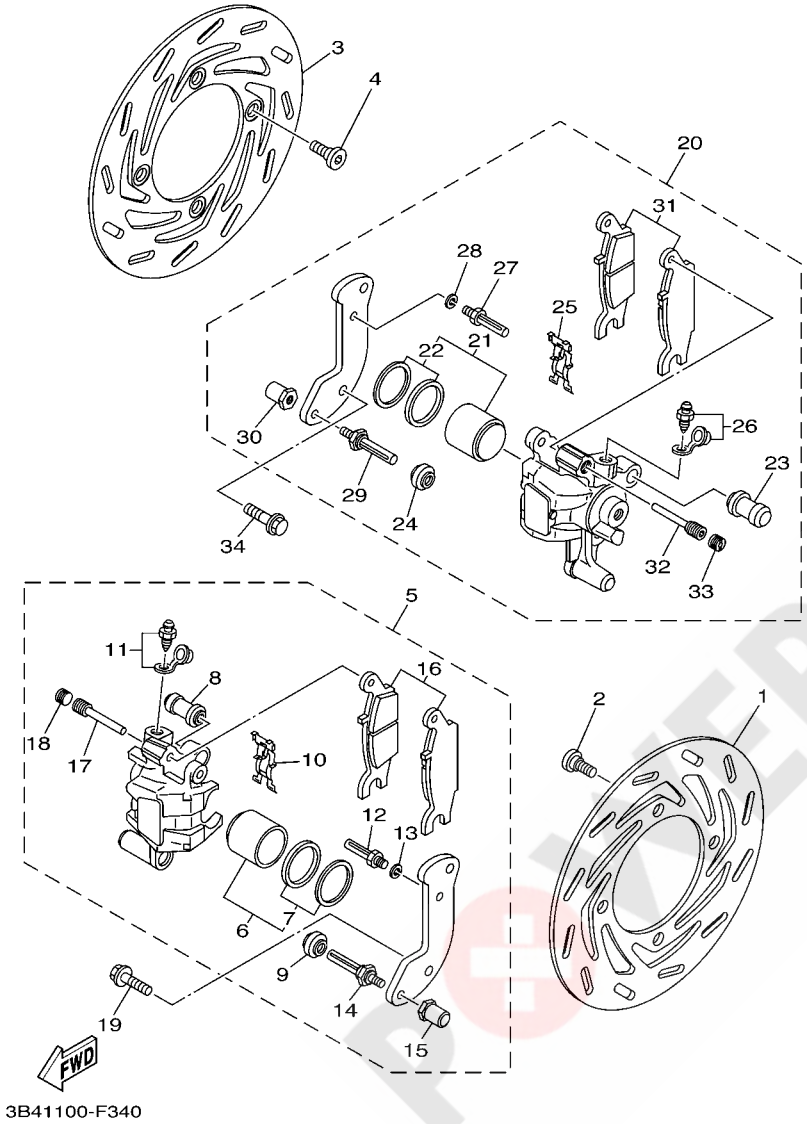

FIG. 34 FRONT BRAKE CALIPER

REF. NO.	PART NO.	DESCRIPTION	EUR					REMARKS
28	1UY–25938–51	.WASHER, SPRING	1					
29	3JD–25926–00	.BOLT	1					
30	3JD–25961–00	.NUT	1					
31	3B4–W0045–10	.BRAKE PAD KIT	1					
32	5DH–25933–00	.PIN, PAD	1					
33	5DH–25916–00	.PLUG	1					
34	90105–08161	BOLT, FLANGE	2					

POWER PARTS By 4X4&4WD

FIG. 35 REAR WHEEL

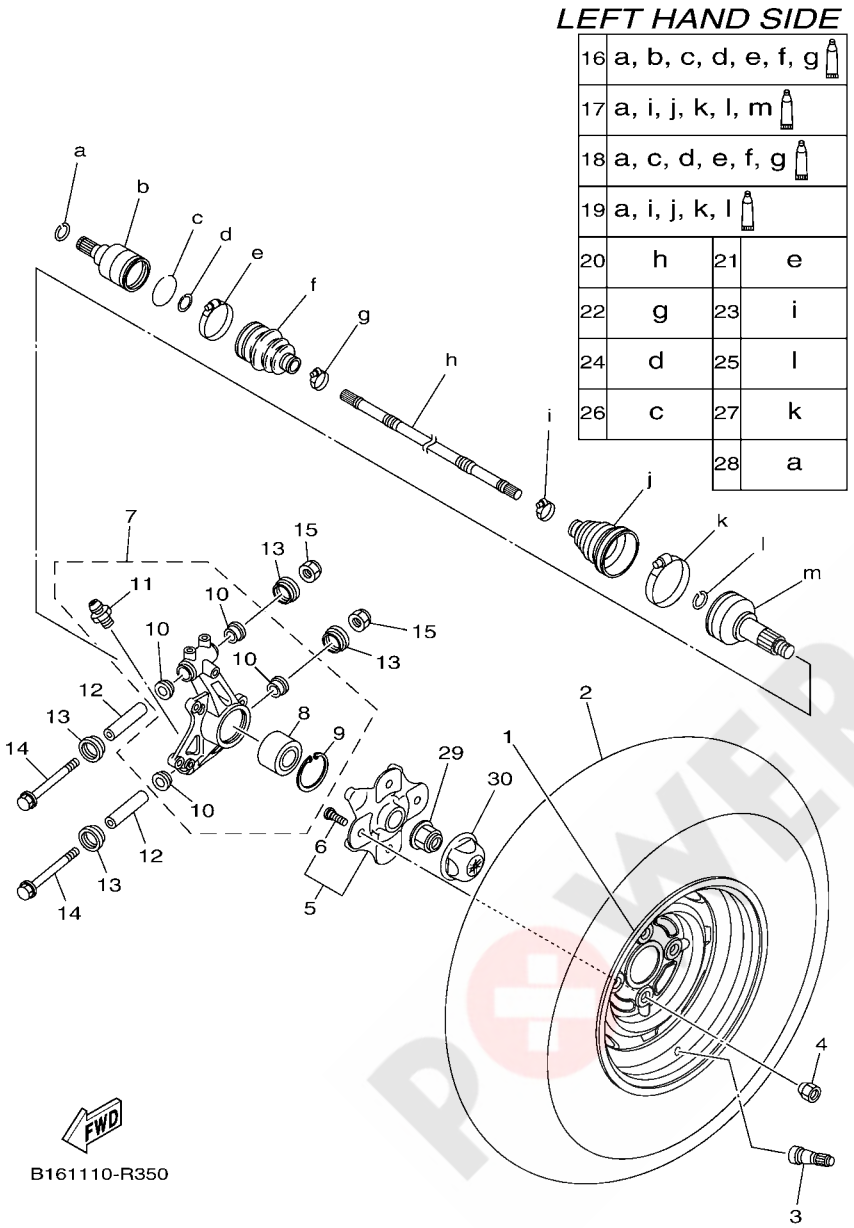

REF. NO.	PART NO.	DESCRIPTION	EUR					REMARKS
1	B16–F5390–00	REAR WHEEL COMP.	1					
2	94110–12814	TIRE (AT25X10-12 MU20**TL)	1					MAXXIS
3	93900–00813	VALVE, RIM (TR413)	1					MAXXIS
4	90179–10020	NUT	4					
5	B16–F510D–00	HUB ASSY 2	1					
6	90114–10014	.BOLT, SERRATION	4					
7	2BG–F530F–00	REAR KNUCKLE ASSY	1					
8	93305–00602	.BEARING	1					
9	99009–55500	.CIRCLIP	1					
10	90381–17067	.BUSH, SOLID	4					
11	93700–06004	.NIPPLE, GREASE	2					
12	5KM–23448–00	SPACER	2					
13	2NL–23517–00	COVER, THRUST 1	4					
14	90105–10212	BOLT, FLANGE	2					
15	90185–10012	NUT, SELF-LOCKING	2					
16	B16–2530V–00	DOUBLE OFF SET JOINT	1					
17	28P–2510F–03	BALL JOINT SET	1					
18	B16–2510H–00	BOOT SET(DOUBLE OFFSET JOINT)	1					
19	28P–2510G–01	BOOT SET (BALL JOINT)	1					
20	B16–2518E–10	SHAFT	1					
21	B16–2511H–00	BOOT BAND(DOUBLE OFFSET JOINT)	1					
22	B16–2512G–00	BOOT BAND (SMALL)	1					
23	28P–2512G–00	BOOT BAND (SMALL)	1					
24	B16–2512J–00	SNAP RING	1					
25	3B4–2512H–00	CIRCLIP	1					
26	B16–25182–00	CIRCLIP	1					
27	28P–2511H–00	BOOT BAND(DOUBLE OFFSET JOINT)	1					

POWER PARTS By AKBAR

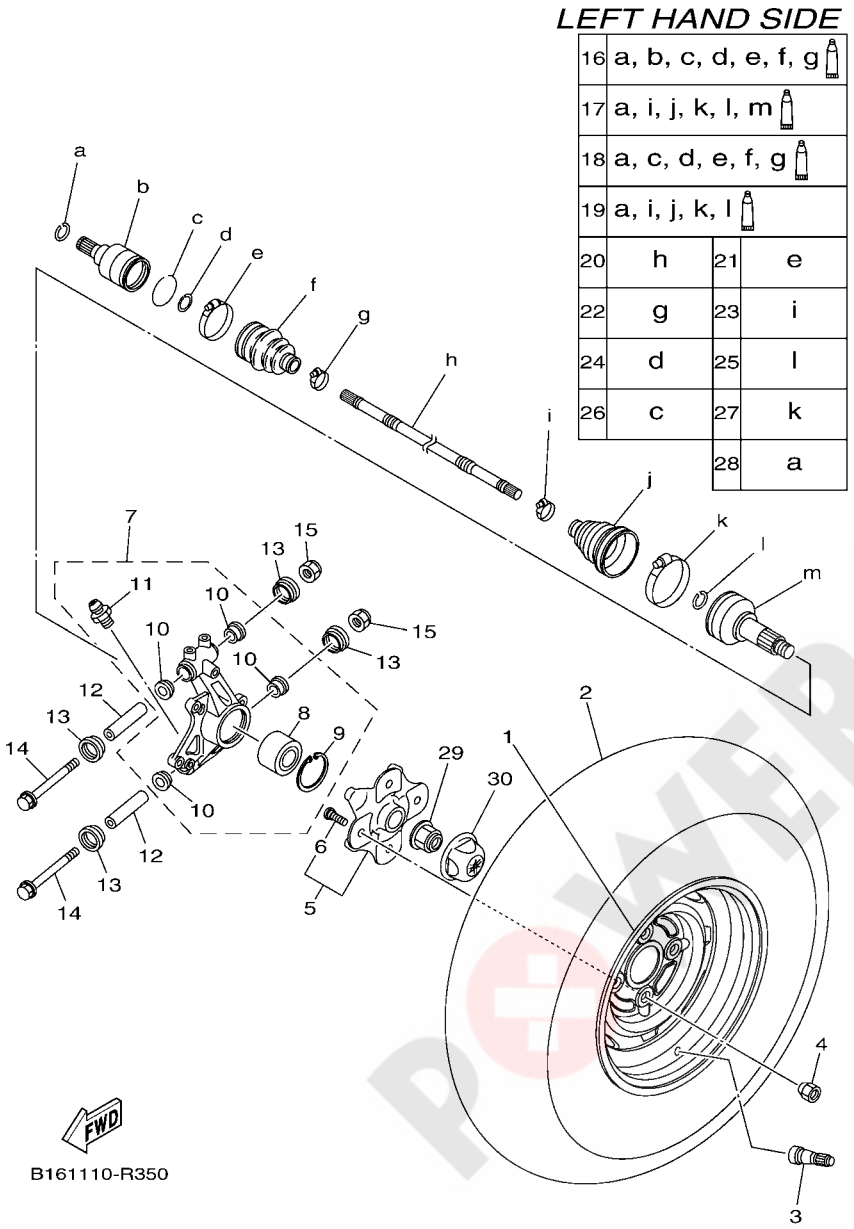

FIG. 35 REAR WHEEL

REF. NO.	PART NO.	DESCRIPTION	EUR					REMARKS
28	3B4–2536E–00	CLIP, SPRING	1					
29	90179–20016	NUT	1					
30	1HP–F512A–00	CAP, WHEEL	1					

POWER PARTS By AKBLAD

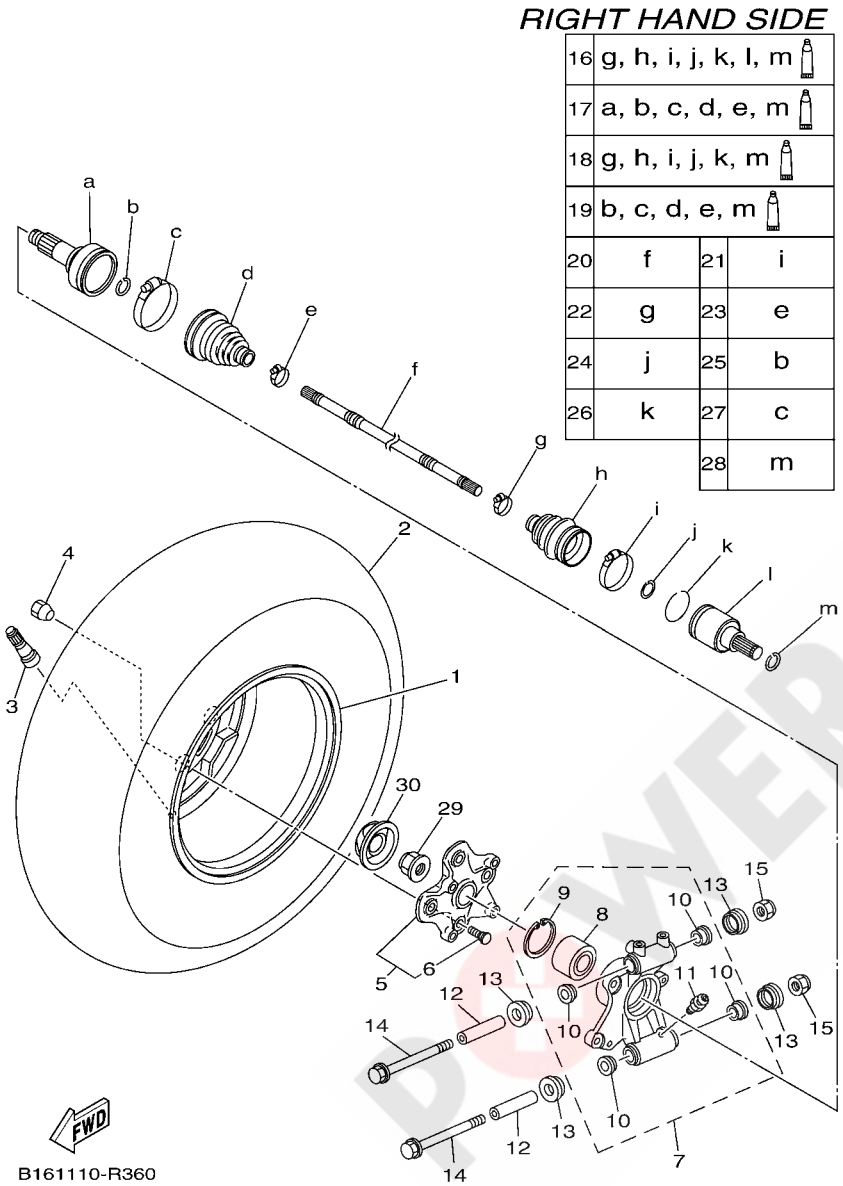

FIG. 36 REAR WHEEL 2

REF. NO.	PART NO.	DESCRIPTION	EUR					REMARKS
1	B16–F5390–00	REAR WHEEL COMP.	1					
2	94110–12814	TIRE (AT25X10-12 MU20**TL)	1					MAXXIS
3	93900–00813	VALVE, RIM (TR413)	1					MAXXIS
4	90179–10020	NUT	4					
5	B16–F510D–00	HUB ASSY 2	1					
6	90114–10014	.BOLT, SERRATION	4					
7	2BG–F532F–00	REAR KNUCKLE ASSY.,2	1					
8	93305–00602	.BEARING	1					
9	99009–55500	.CIRCLIP	1					
10	90381–17067	.BUSH, SOLID	4					
11	93700–06004	.NIPPLE, GREASE	2					
12	5KM–23448–00	SPACER	2					
13	2NL–23517–00	COVER, THRUST 1	4					
14	90105–10212	BOLT, FLANGE	2					
15	90185–10012	NUT, SELF-LOCKING	2					
16	B16–2530V–00	DOUBLE OFF SET JOINT	1					
17	28P–2510F–03	BALL JOINT SET	1					
18	B16–2510H–00	BOOT SET(DOUBLE OFFSET JOINT)	1					
19	28P–2510G–01	BOOT SET (BALL JOINT)	1					
20	B16–2518E–10	SHAFT	1					
21	B16–2511H–00	BOOT BAND(DOUBLE OFFSET JOINT)	1					
22	B16–2512G–00	BOOT BAND (SMALL)	1					
23	28P–2512G–00	BOOT BAND (SMALL)	1					
24	B16–2512J–00	SNAP RING	1					
25	3B4–2512H–00	CIRCLIP	1					
26	B16–25182–00	CIRCLIP	1					
27	28P–2511H–00	BOOT BAND(DOUBLE OFFSET JOINT)	1					

POWER PARTS By 4x4&4AD

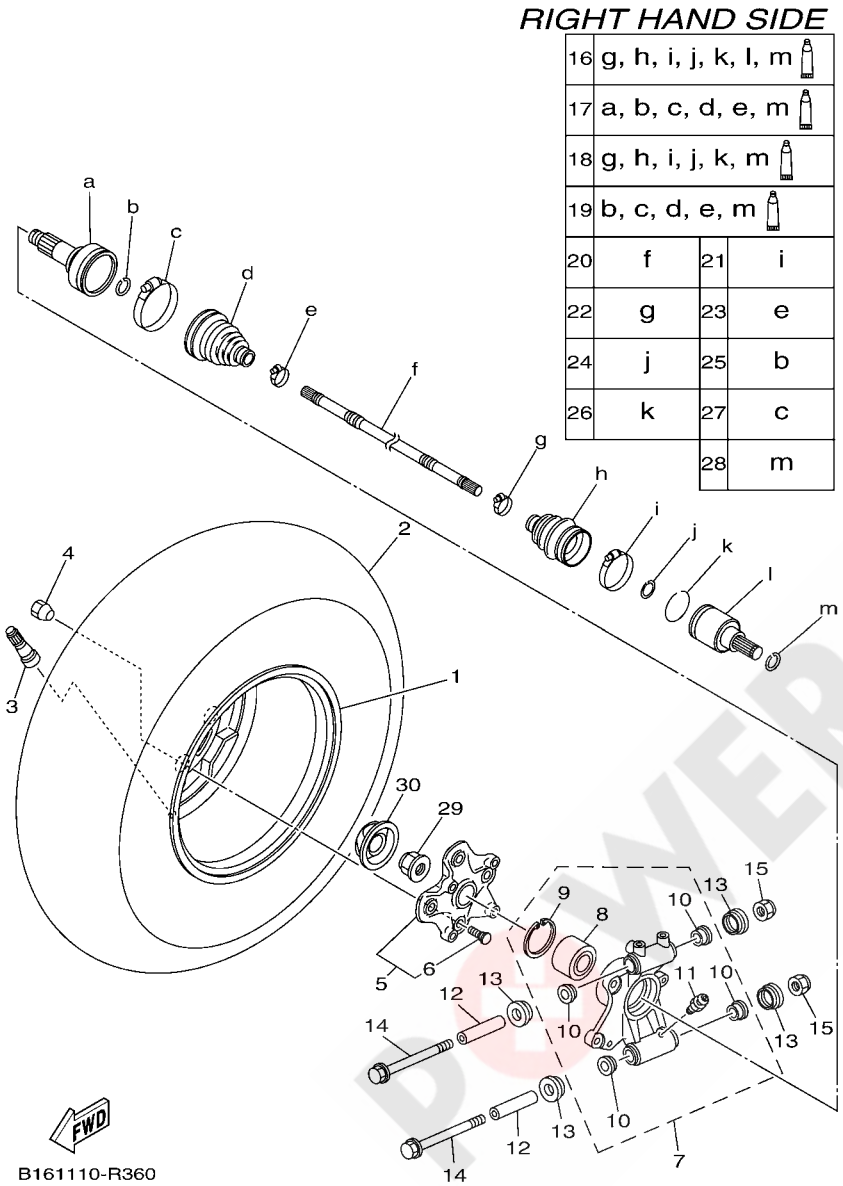

FIG. 36 REAR WHEEL 2

REF. NO.	PART NO.	DESCRIPTION	EUR					REMARKS
28	3B4–2536E–00	CLIP, SPRING	1					
29	90179–20016	NUT	1					
30	1HP–F512A–00	CAP, WHEEL	1					

POWER PARTS By 4X4&UAD

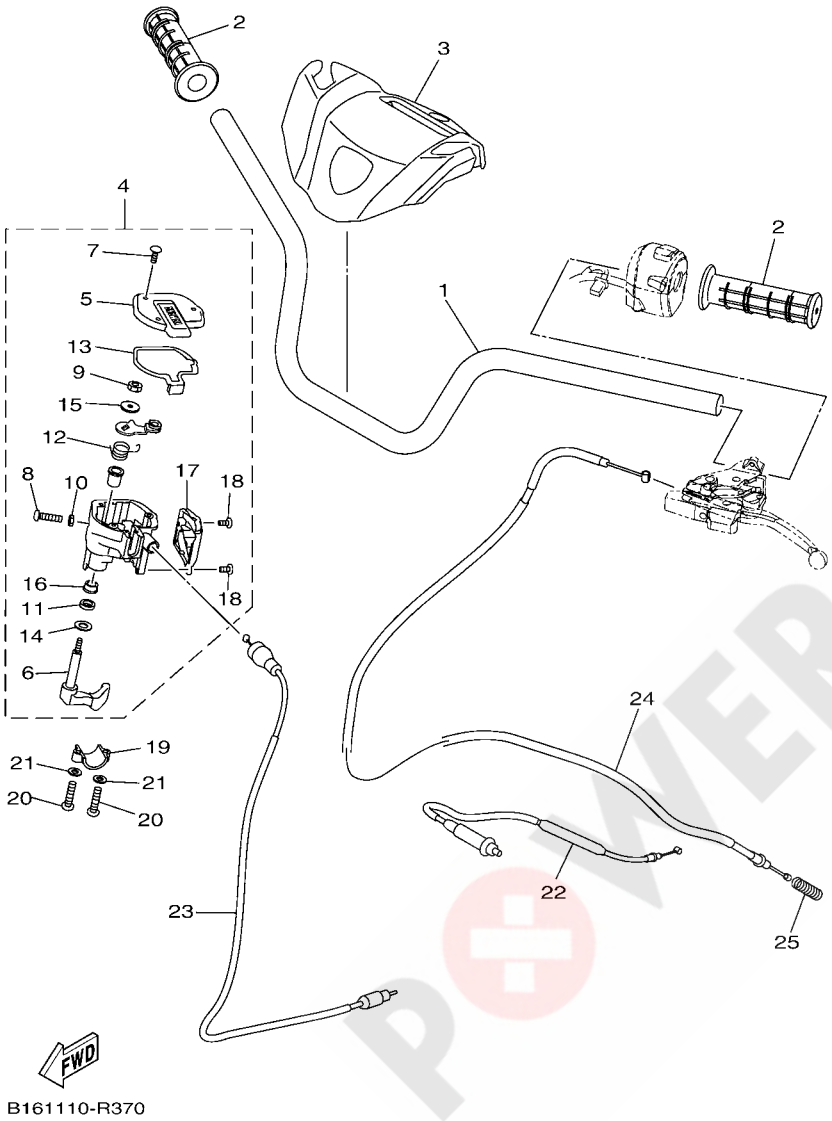

FIG. 37 STEERING HANDLE & CABLE

REF. NO.	PART NO.	DESCRIPTION	EUR					REMARKS
1	B16–F6111–00	HANDLEBAR	1					
2	5FU–F6241–10	GRIP	2					
3	B16–F6124–00	PROTECTOR, HANDLEBAR	1					
4	B16–26250–00	THROTTLE LEVER ASSY	1					
5	28P–2628F–00	.CAP, GEAR	1					
6	28P–2625G–00	.LEVER, THROTTLE	1					
7	90149–04278	.SCREW	3					
8	98507–05020	.SCREW, PAN HEAD	1					
9	95607–05100	.NUT, U	1					
10	95307–05700	.NUT	1					
11	93104–09025	.OIL SEAL	1					
12	1NV–26304–00	.SPRING	1					
13	28P–2628G–00	.GASKET	1					
14	1NV–26129–00	.WASHER	1					
15	1NV–26398–00	.WASHER	1					
16	1NV–2625K–00	.COLLAR	1					
17	B16–26477–00	.COVER	1					
18	98907–04008	.SCREW, BIND	2					
19	1S3–82913–00	HOLDER, LEVER LOWER 1	1					
20	98502–05020	SCREW, PAN HEAD	2					
21	92902–05600	WASHER, PLATE	2					
22	B16–2637F–00	CABLE, CONTROL 2	1					
23	B16–26311–00	CABLE, THROTTLE 1	1					
24	B16–26341–00	WIRE, BRAKE 1	1					
25	90501–121A2	SPRING, COMPRESSION	1					

POWER PARTS By AKAMAD

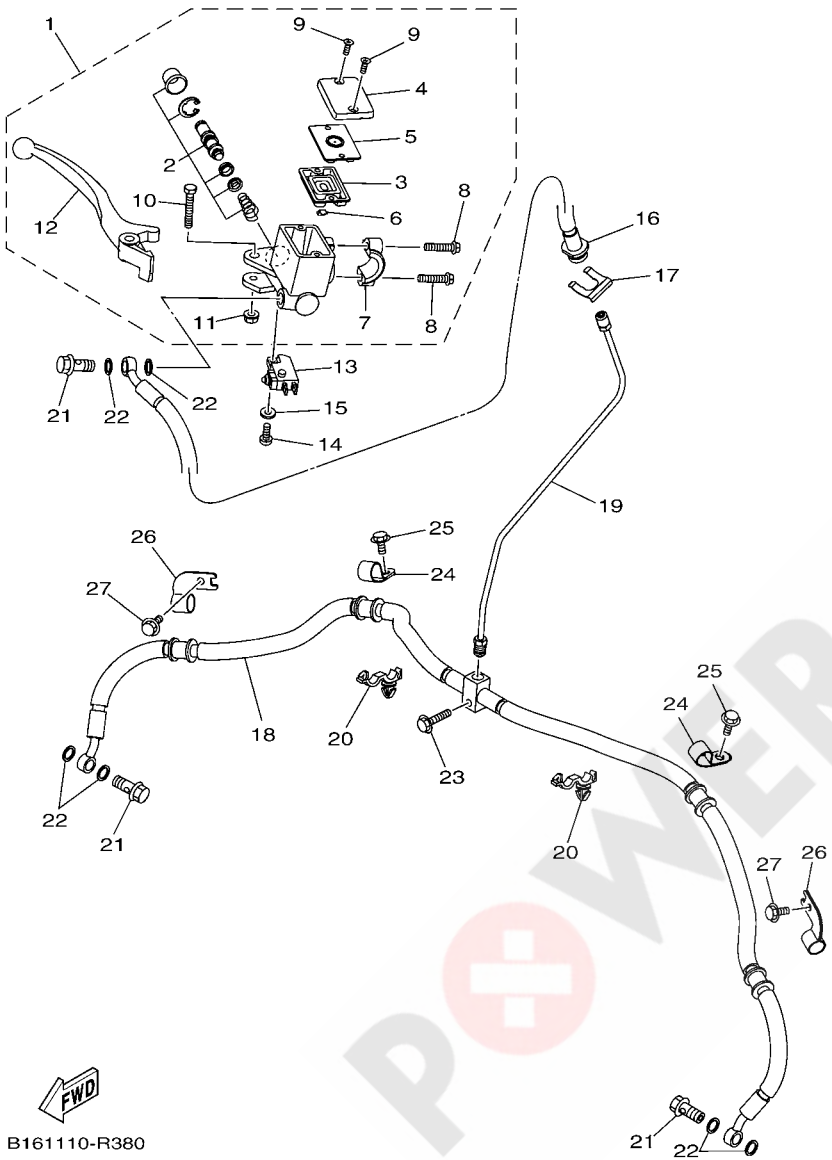

FIG. 38 FRONT MASTER CYLINDER

REF. NO.	PART NO.	DESCRIPTION	EUR					REMARKS
1	B16–F583T–00	MASTER CYLINDER ASSY	1					
2	B16–F5807–00	.CYLINDER KIT, MASTER	1					
3	B16–F5854–00	.DIAPHRAGM, RESERVOIR	1					
4	B16–F5852–00	.CAP, RESERVOIR	1					
5	B16–F585B–00	.PLATE, DIAPHRAGM	1					
6	B16–F5889–00	.SEPARATOR	1					
7	B16–F5867–00	.BRACKET, MASTER CYLINDER	1					
8	B16–F6332–00	.BOLT	2					
9	98702–04012	.SCREW, FLAT HEAD	2					
10	B16–F589F–10	.BOLT, LEVER	1					
11	95702–06500	.NUT, FLANGE	1					
12	B16–F3922–00	.LEVER, BRAKE	1					
13	1HP–83980–01	FRONT STOP SWITCH ASSY	1					
14	98502–04012	SCREW, PAN HEAD	1					
15	92902–04600	WASHER, PLATE	1					
16	B16–F5872–00	HOSE, BRAKE 1	1					
17	2GU–25866–00	CIRCLIP	1					
18	1HP–F5873–00	HOSE, BRAKE 2	1					
19	1HP–F5871–00	PIPE, BRAKE	1					
20	90464–20010	CLAMP	2					
21	90401–10015	BOLT, UNION	3					
22	90201–10118	WASHER, PLATE	6					
23	95812–06025	BOLT, FLANGE	1					
24	3B4–25886–00	HOLDER, BRAKE HOSE	2					
25	95812–06012	BOLT, FLANGE	2					
26	2PG–25876–00	HOLDER, BRAKE HOSE 2	2					
27	95812–06012	BOLT, FLANGE	2					

POWER PARTS By AKAMO

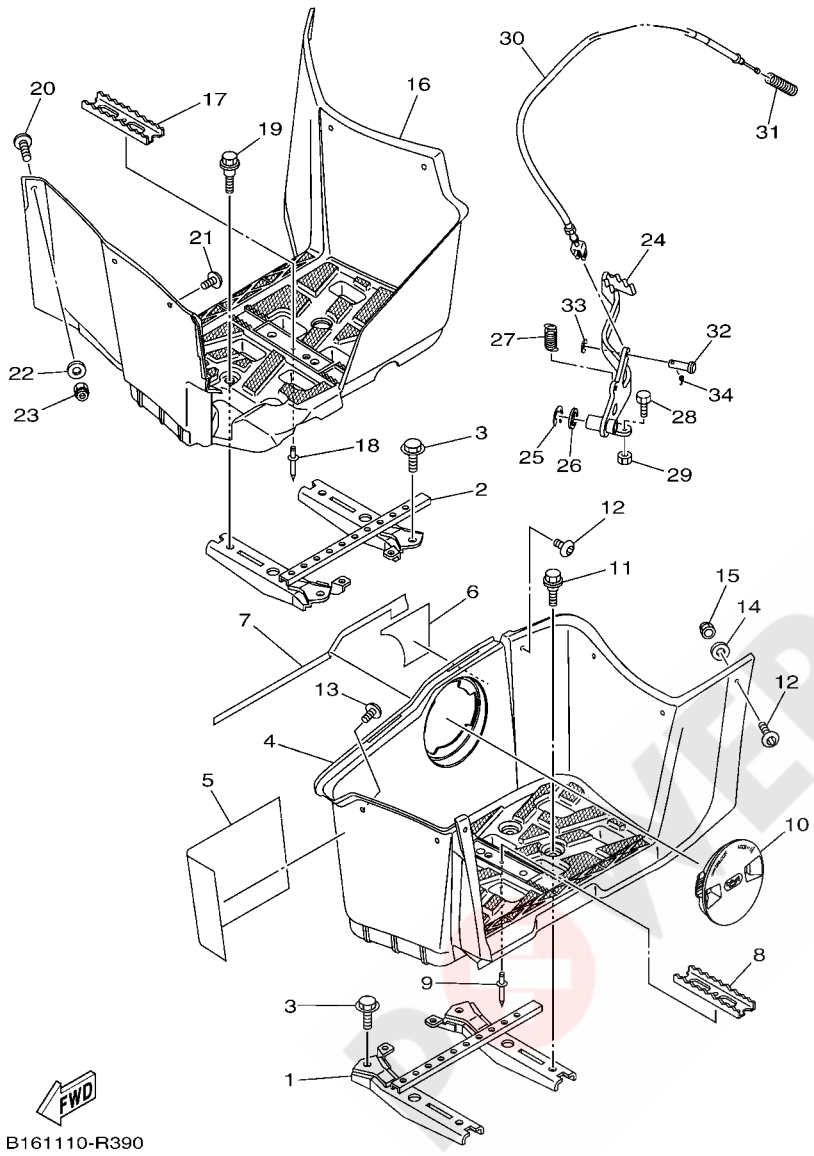

FIG. 39 STAND & FOOTREST

REF. NO.	PART NO.	DESCRIPTION	EUR					REMARKS
1	1HP–F7452–00	BRACKET, FOOTREST 1	1					
2	1HP–F7462–00	BRACKET, FOOTREST 2	1					
3	95812–08012	BOLT, FLANGE	4					
4	1HP–F7453–00	COVER 1	1					
5	3B4–21732–00	SEAL 1	1					
6	1HP–F2875–00	SEAL 3	1					
7	2BG–F2874–00	SEAL 2	1					
8	5UH–F741A–10	ARM 1	1					
9	90267–489U9	RIVET, BLIND	1					
10	1HP–F8239–00	COVER 3	1					
11	90109–06043	BOLT	4					
12	90111–06814	BOLT,HEX. SOCKET BUTTON	6					
13	90111–06137	BOLT,HEX. SOCKET BUTTON	1					
14	90201–06078	WASHER, PLATE	6					
15	95702–06300	NUT, NYLON	6					
16	1HP–F7463–00	COVER 2	1					
17	5UH–F741A–10	ARM 1	1					
18	90267–489U9	RIVET, BLIND	1					
19	90109–06043	BOLT	4					
20	90111–06814	BOLT,HEX. SOCKET BUTTON	5					
21	90111–06137	BOLT,HEX. SOCKET BUTTON	1					
22	90201–06078	WASHER, PLATE	6					
23	95702–06300	NUT, NYLON	6					
24	1HP–F7211–00	PEDAL, BRAKE	1					
25	99001–10600	CIRCLIP	1					
26	90201–14023	WASHER, PLATE	1					
27	90506–20014	SPRING, TENSION	1					

POWER PARTS By ARMAD

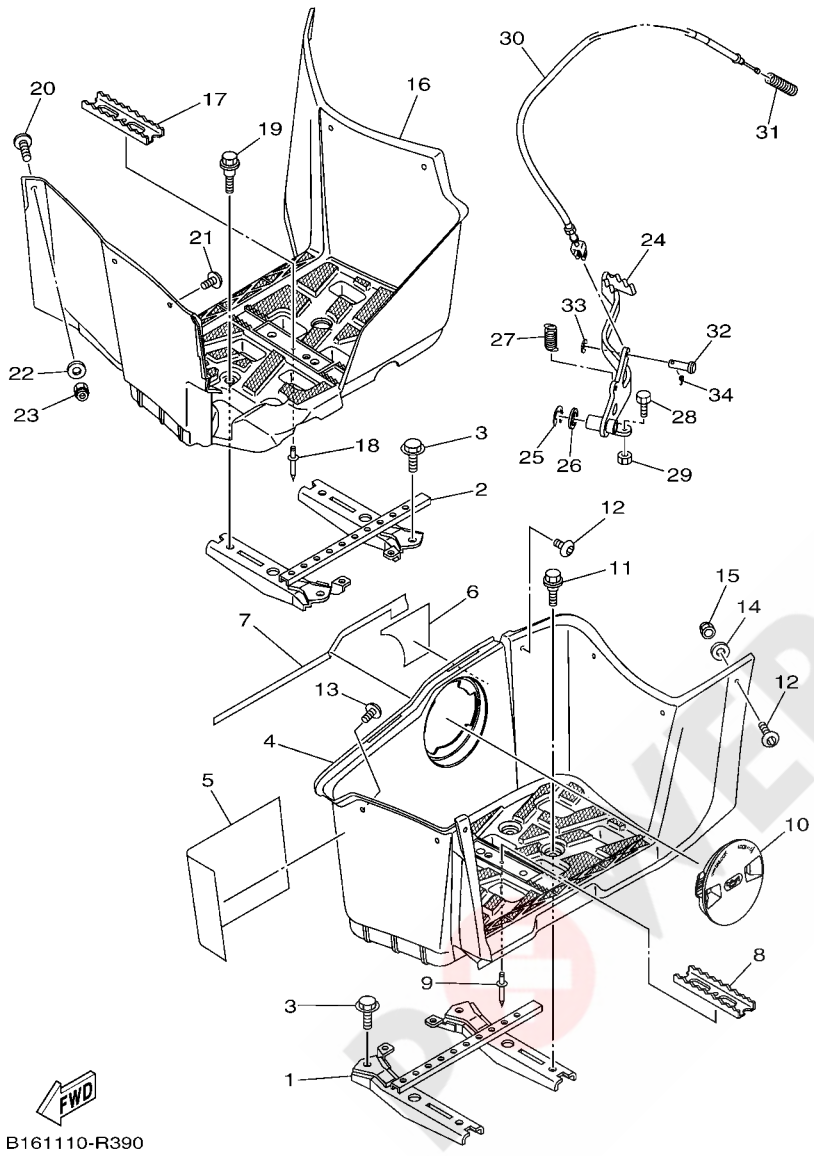

FIG. 39 STAND & FOOTREST

REF. NO.	PART NO.	DESCRIPTION	EUR					REMARKS
28	97022–06014	BOLT, HEXAGON	1					
29	95302–06600	NUT, HEXAGON	1					
30	B16–26351–00	CABLE, BRAKE	1					
31	90501–121A2	SPRING, COMPRESSION	1					
32	90240–06076	PIN, CLEVIS	1					
33	92907–06200	WASHER	1					
34	91401–20012	PIN, COTTER	1					

POWER PARTS By 4x4UAD

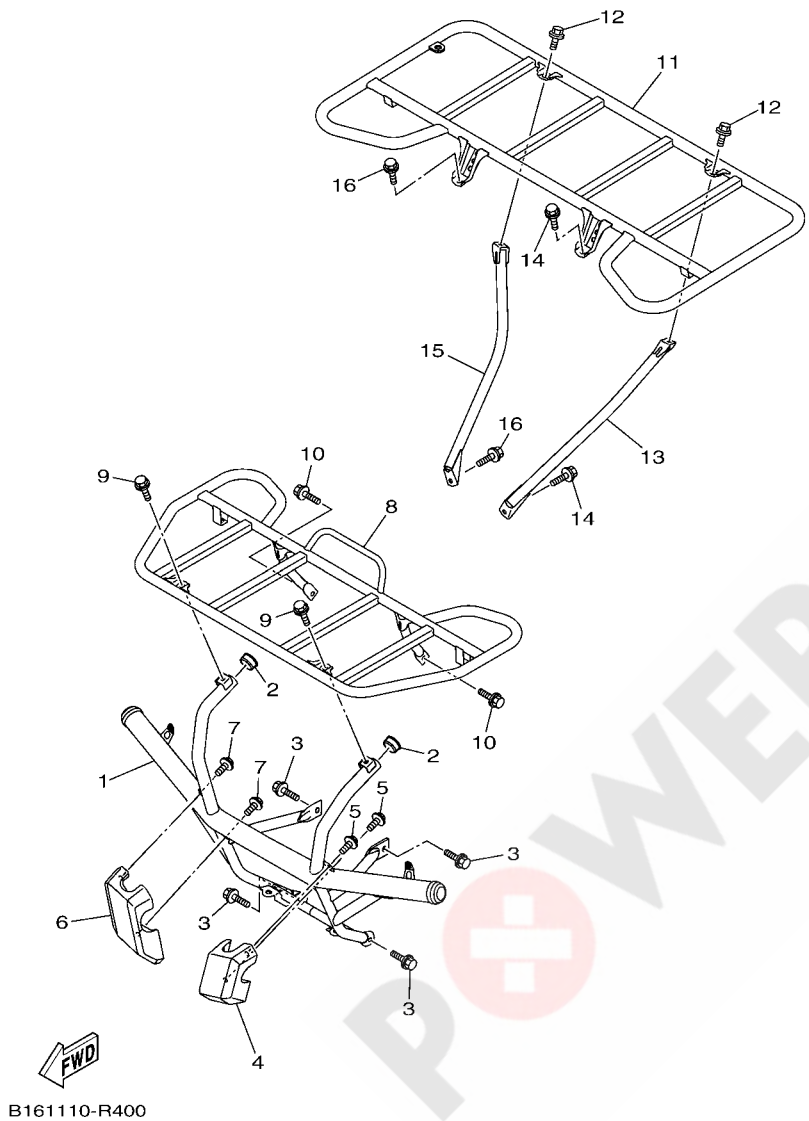

FIG. 40 GUARD

REF. NO.	PART NO.	DESCRIPTION	EUR					REMARKS
1	B16–F845N–00	BAR, CARRY FRONT	1					
2	90338–26004	PLUG	2					
3	95812–08014	BOLT, FLANGE	4					
4	B16–F842M–00	COVER 1	1					
5	95812–06010	BOLT, FLANGE	2					
6	B16–F842N–00	COVER 2	1					
7	95812–06010	BOLT, FLANGE	2					
8	B16–F4841–00	CARRIER, FRONT	1					
9	95812–08012	BOLT, FLANGE	2					
10	90119–08118	BOLT, WITH WASHER	2					
11	B16–F4842–00	CARRIER, REAR	1					
12	95812–08014	BOLT, FLANGE	2					
13	B16–F482J–00	FRAME, CARRIER 1	1					
14	90119–10044	BOLT, WITH WASHER	2					
15	B16–F482K–00	FRAME, CARRIER 2	1					
16	90119–10044	BOLT, WITH WASHER	2					

POWER PARTS By 4WDMAD

FIG. 41 GENERATOR

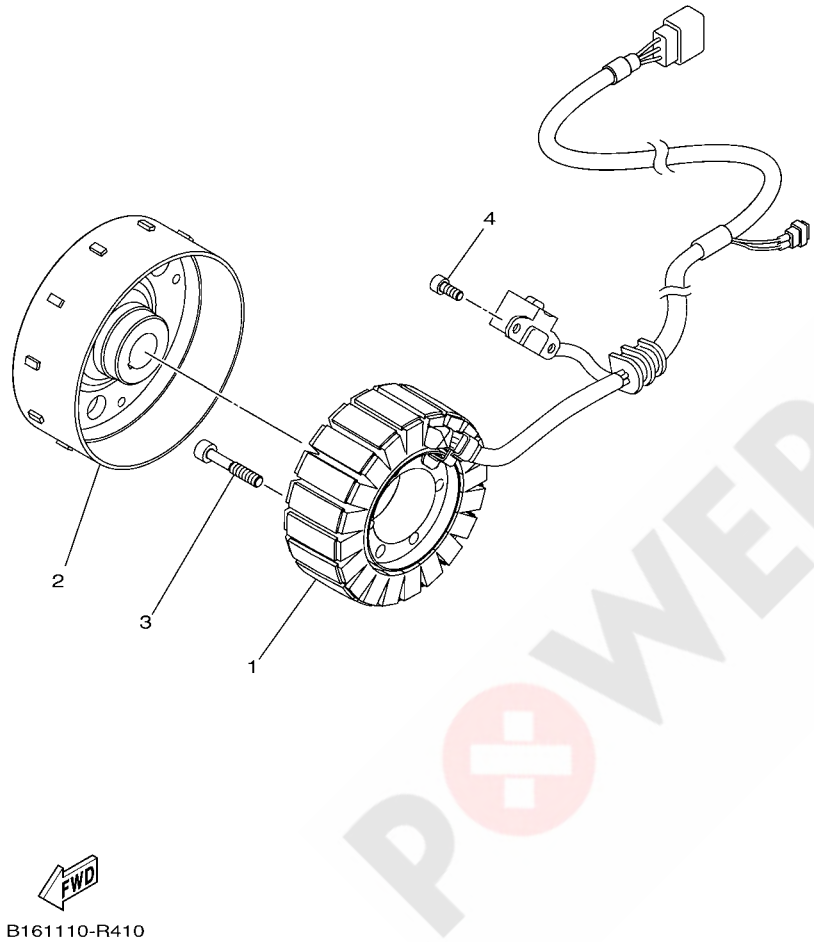

REF. NO.	PART NO.	DESCRIPTION	EUR					REMARKS
1	B16–H1410–00	STATOR ASSY	1					
2	2MB–H1450–00	ROTOR ASSY	1					
3	2MB–E6777–20	BOLT	3					
4	2MB–E5187–00	BOLT	2					

POWER PARTS By 4X4UAD

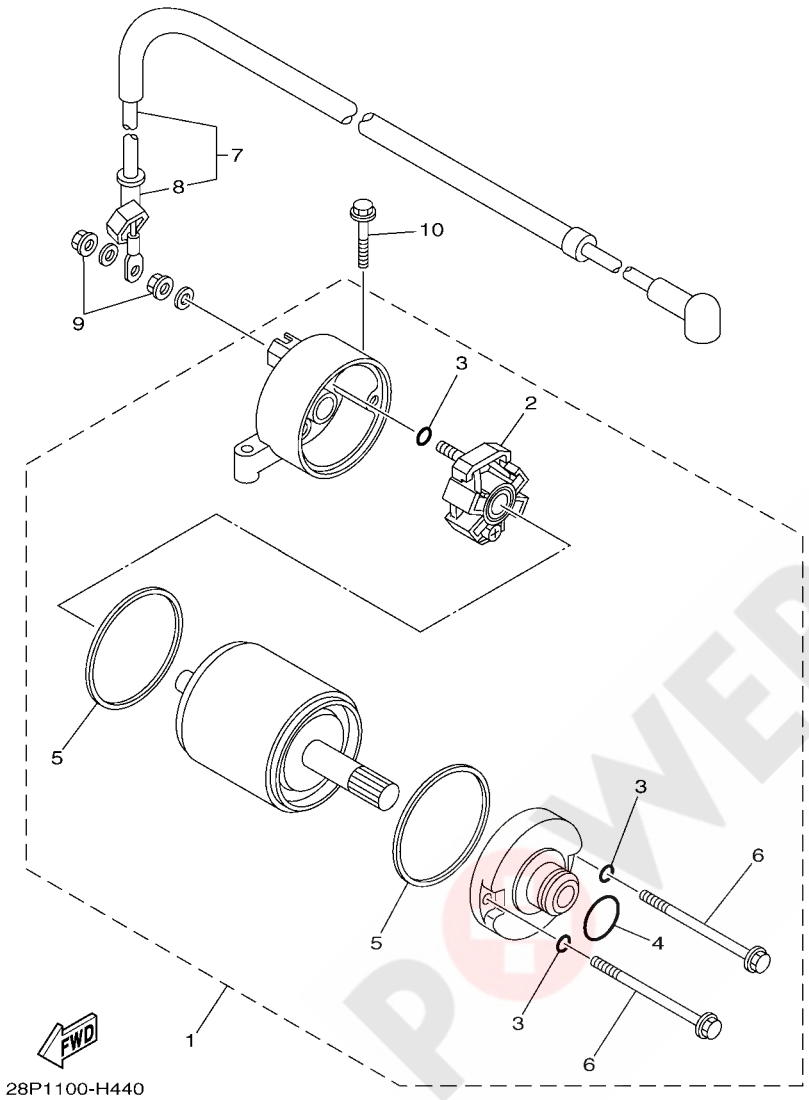

FIG. 42 STARTING MOTOR

REF. NO.	PART NO.	DESCRIPTION	EUR					REMARKS
1	28P–81890–00	MOTOR ASSY	1					
2	4B5–81840–00	.BRUSH HOLDER ASSY	1					
3	3TB–81847–00	.O-RING	3					
4	1FK–81847–00	.O-RING	1					
5	11H–81844–00	.GASKET	2					
6	28P–81826–00	.BOLT	2					
7	28P–81815–00	CORD, STARTER MOTOR	1					
8	4B5–81871–00	.CAP	1					
9	4XV–8182A–00	NUT	2					
10	2MB–E5481–50	BOLT 1	2					

POWER PARTS By 4X&4AD

FIG. 43 HEADLIGHT

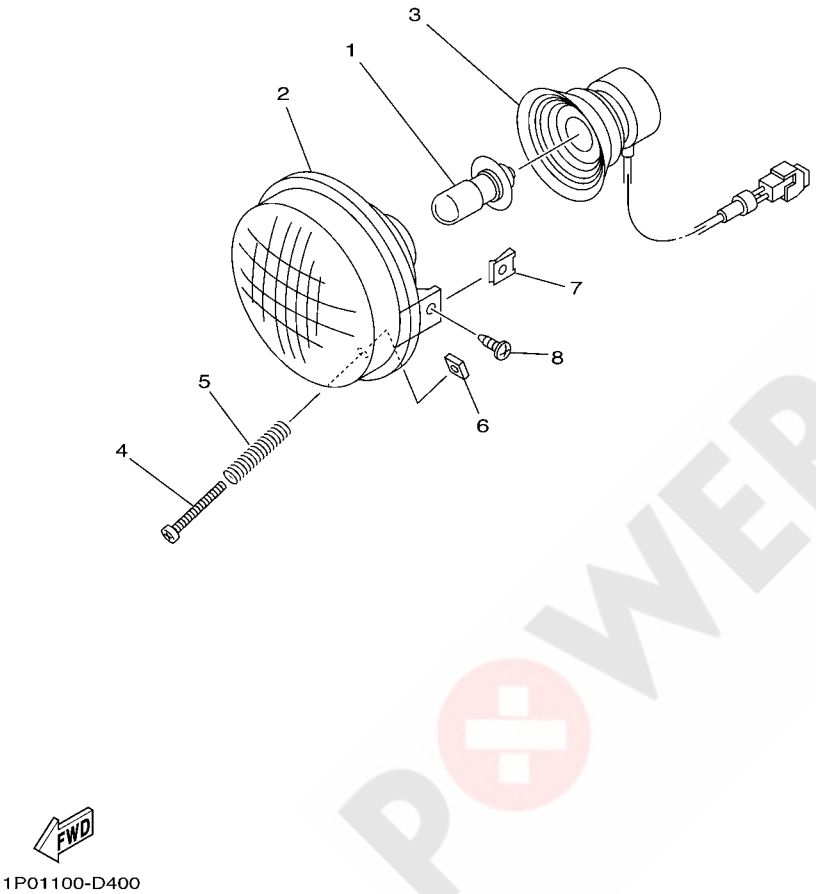

REF. NO.	PART NO.	DESCRIPTION	EUR					REMARKS
1	4KB–84314–01	BULB (12V-30/30W)	2					
2	5KM–84320–01	LENS ASSY	2					
3	5EH–84340–00	SOCKET CORD ASSY 1	2					
4	98502–03540	SCREW, PAN HEAD	2					
5	2GU–84332–00	SPRING, SCREW	2					
6	2GU–84334–00	NUT, ADJUSTING	2					
7	90183–05008	NUT, SPRING	4					
8	98902–05016	SCREW, BIND	4					

POWER PARTS By AKUAD

FIG. 44 TAILLIGHT

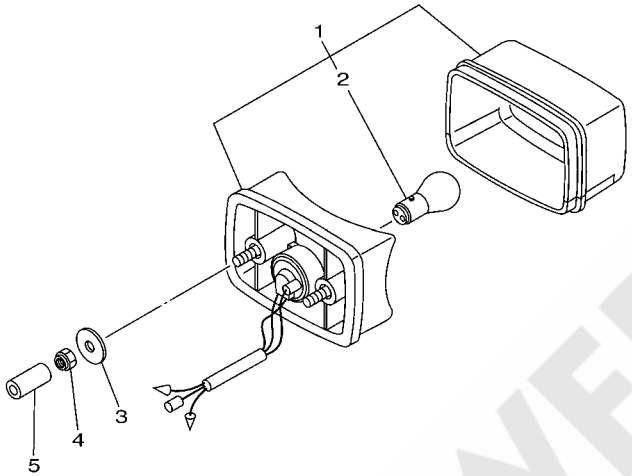

3B41100-F470

REF. NO.	PART NO.	DESCRIPTION	EUR					REMARKS
1	3FA–84710–00	TAILLIGHT UNIT ASSY	1					
2	1A2–84714–41	.BULB (12V-21/5W)	1					
3	90201–06097	WASHER, PLATE	2					
4	95702–06300	NUT, NYLON	2					
5	90445–09220	HOSE (L30)	1					

POWER PARTS By 4X4&UAD

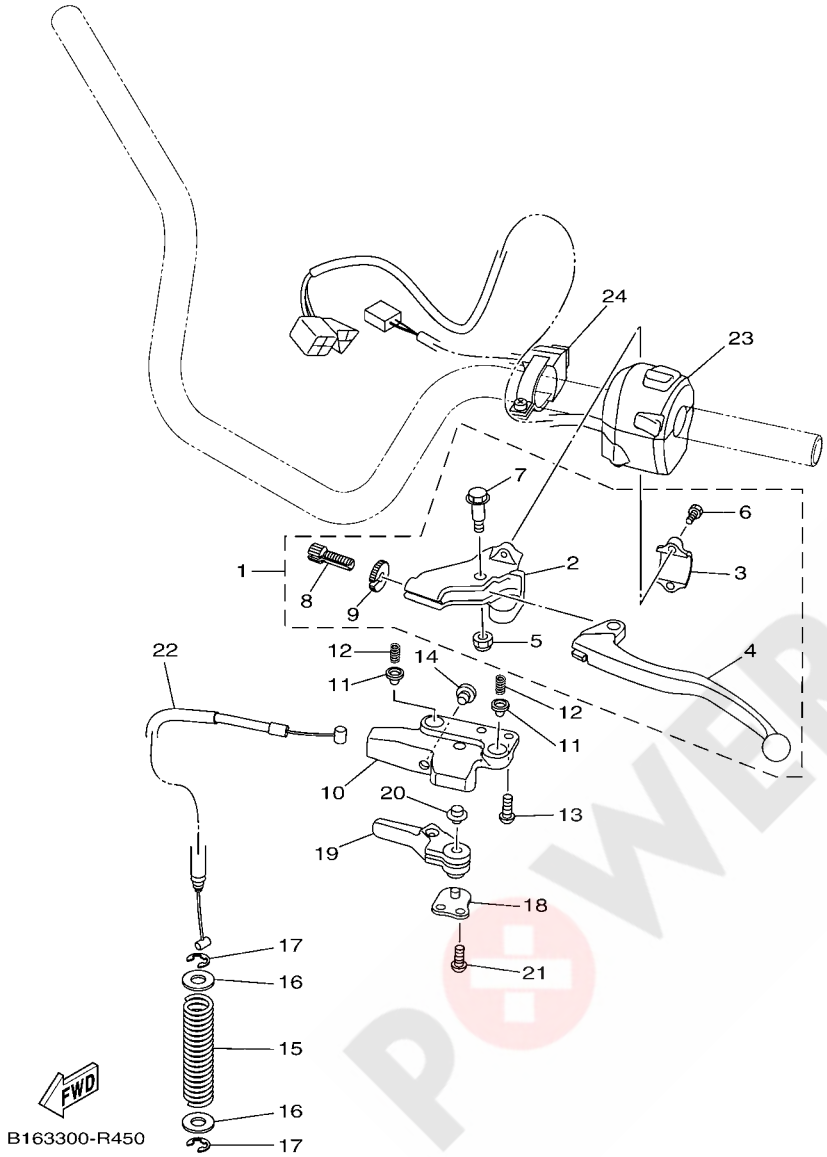

FIG. 45 HANDLE SWITCH & LEVER

REF. NO.	PART NO.	DESCRIPTION	EUR					REMARKS
1	B16–82910–00	LEVER HOLDER ASSY (LEFT)	1					
2	B16–82911–00	.HOLDER, LEVER 1	1					
3	5TG–82913–00	.HOLDER, LEVER LOWER 1	1					
4	2HT–83912–01	.LEVER 1	1					
5	95602–06100	.NUT, U	1					
6	90101–05033	.BOLT	2					
7	90109–06798	.BOLT	1					
8	90123–08002	.BOLT	1					
9	90179–08030	.NUT	1					
10	B16–25727–00	BRACKET, LEVER	1					
11	B16–26154–00	STOPPER, LEVER	2					
12	90501–12743	SPRING, COMPRESSION	2					
13	92012–06016	BOLT, BUTTON HEAD	2					
14	90338–07007	PLUG	1					
15	90501–300A1	SPRING, COMPRESSION	1					
16	90201–10035	WASHER, PLATE	2					
17	99001–08600	CIRCLIP	2					
18	5D3–25689–00	PLATE, GUIDE	1					
19	B16–26164–00	LEVER 1	1					
20	5TG–83923–00	COLLAR, LEVER 2	1					
21	92012–06014	BOLT, BUTTON HEAD	2					
22	B16–2637E–00	CABLE, CONTROL 1	1					
23	1S3–83973–11	SWITCH, HANDLE 3	1					
24	3B4–83976–00	SWITCH, HANDLE 1	1					

POWER PARTS By AKQUAD

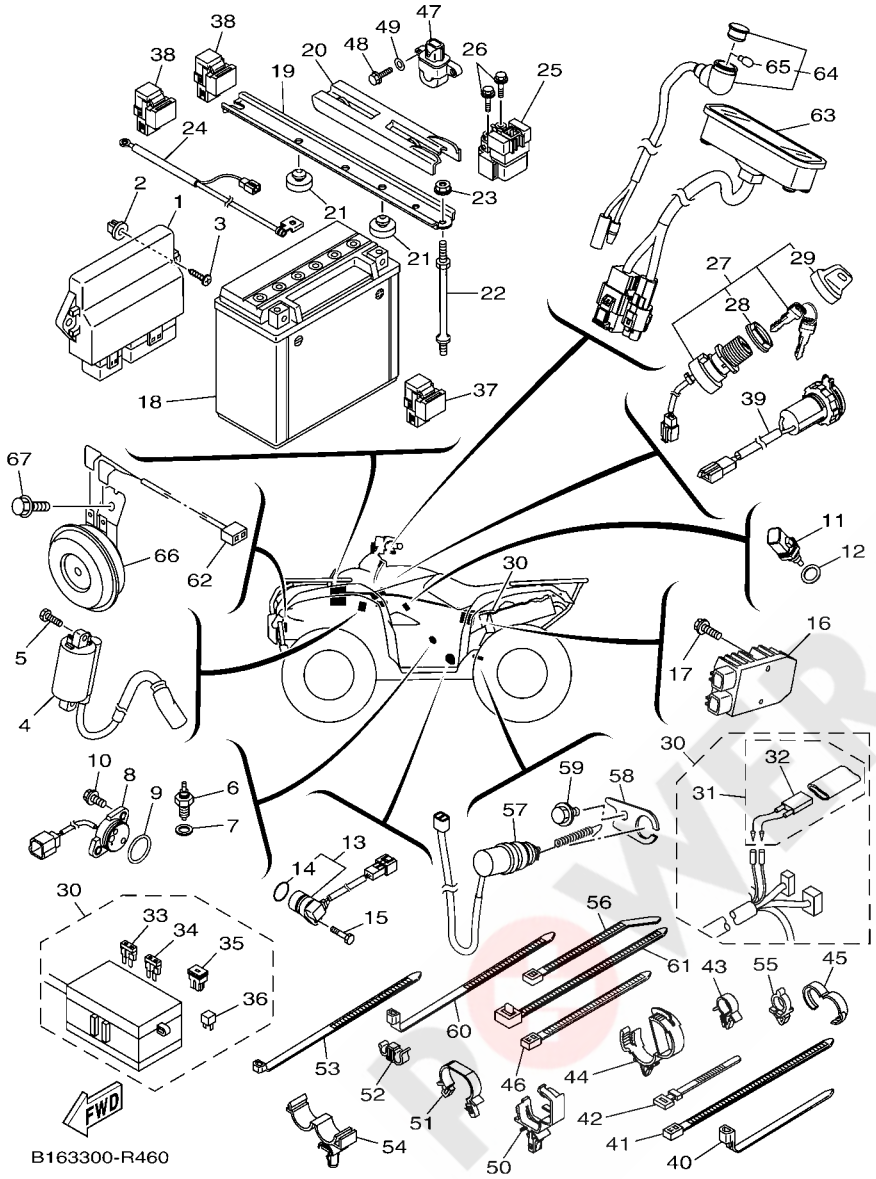

FIG. 46 ELECTRICAL 1

REF. NO.	PART NO.	DESCRIPTION	EUR					REMARKS
1	B16–8591A–00	ENGINE CONTROL UNIT ASSY	1					
2	90338–08226	PLUG	1					
3	97702–60025	SCREW, TAPPING	1					
4	B16–82320–00	IGNITION COIL ASSY	1					
5	97012–06016	BOLT	2					
6	2MB–H2540–00	NEUTRAL SWITCH ASSY	1					
7	2MB–E5384–00	GASKET	1					
8	B16–H2540–10	NEUTRAL SWITCH ASSY	1					
9	2MB–E4D97–00	O-RING	1					
10	2MB–E5768–10	BOLT	2					
11	2MB–H5790–00	THERMOSENSOR ASSY	1					
12	2MB–E1195–00	GASKET	1					
13	3B4–83755–00	SENSOR, SPEED	1					
14	4D9–81168–00	.O-RING	1					
15	2MB–E5481–10	BOLT 1	1					
16	1D7–81960–01	RECTIFIER & REGULATOR ASSY	1					
17	95812–06020	BOLT, FLANGE	2					
18	5FU–H2100–20	BATTERY ASSY (YUASA YTX20L-BS)	1					
19	1HP–H2128–00	BRACKET, BATTERY	1					
20	3B4–82129–00	COVER, BATTERY	1					
21	22W–24741–00	PAD, SEAT	2					
22	3B4–82133–11	SCREW, FITTING	2					
23	95702–06500	NUT, FLANGE	2					
24	28P–82116–00	WIRE, MINUS LEAD	1					
25	3B4–81940–00	STARTER RELAY ASSY (2768113-A)	1					
26	95022–06008	BOLT, FLANGE	2					
27	28P–82510–00	MAIN SWITCH ASSY	1					

POWER PARTS By AKAWAD

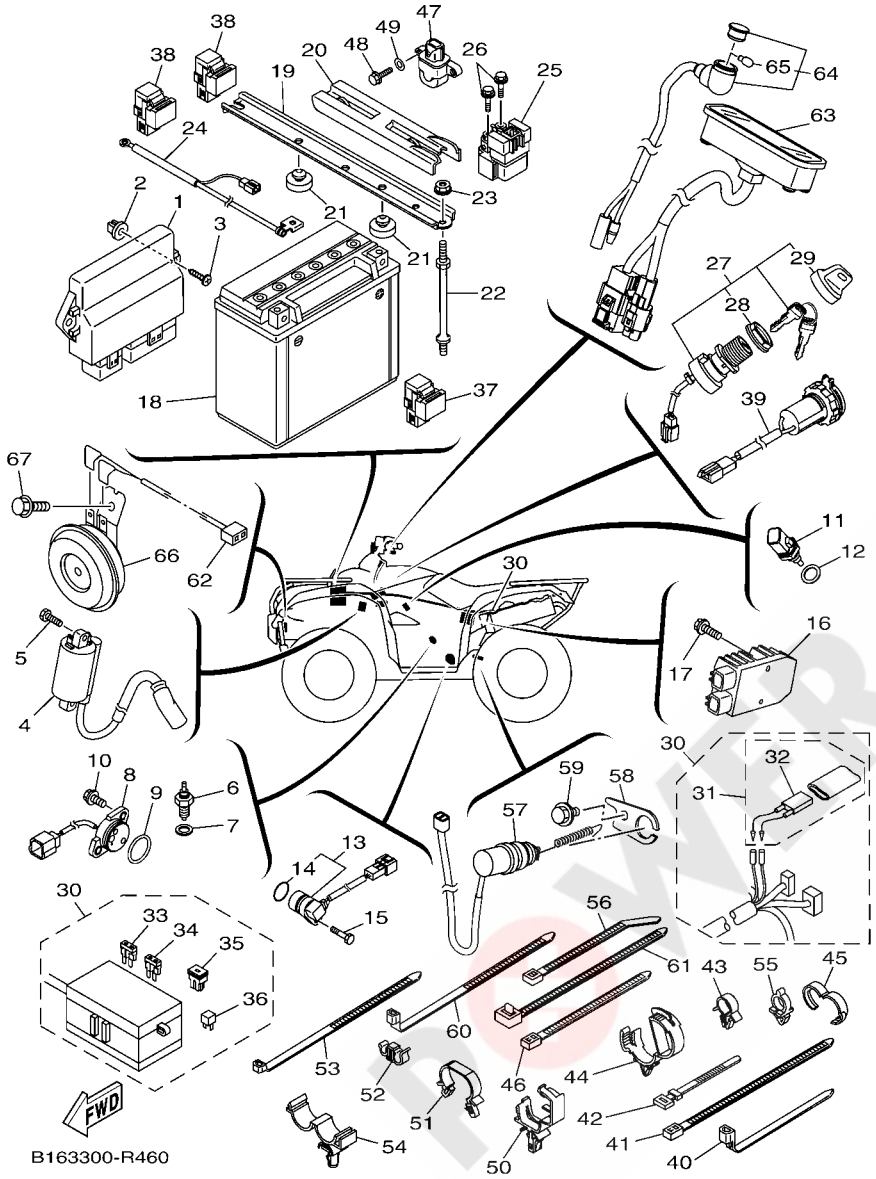

FIG. 46 ELECTRICAL 1

REF. NO.	PART NO.	DESCRIPTION	EUR					REMARKS
28	3HN–82569–00	.NUT, MAIN SWITCH	1					
29	3HN–82579–00	.CAP, KEY	1					
30	B16–82590–00	WIRE HARNESS ASSY	1					
31	4GB–82180–00	.CIRCUIT BREAKER ASSY	1					
32	4GB–82560–00	..THERMO SWITCH ASSY	1					
33	5JJ–82151–20	.FUSE (20A-BL)	2					
34	5JJ–82151–30	.FUSE (10A-BL)	5					
35	5PS–82151–00	.FUSE (40A)	1					
36	3WP–81980–00	.DIODE ASSY	1					
37	5DM–81950–00	RELAY ASSY (G8HN-1C4T-DJ-Y52)	1					
38	8DM–81950–11	RELAY ASSY (8DM-11)	2					
39	1HP–H254B–10	TERMINAL COMP.	1					
40	90464–15195	CLAMP	2					
41	90464–40825	CLAMP	4					
42	437–83936–01	BAND, SWITCH CORD	4					
43	90464–15157	CLAMP	5					
44	90464–20181	CLAMP	2					
45	90464–16001	CLAMP	1					
46	437–83936–11	BAND, SWITCH CORD	1					
47	3B4–82576–00	SENSOR, LEAN ANGLE	1					
48	97002–05016	BOLT	2					
49	92902–05600	WASHER, PLATE	2					
50	90464–20237	CLAMP	1					
51	90464–24230	CLAMP	1					
52	90464–09013	CLAMP	3					
53	90464–12045	CLAMP	3					
54	90464–16012	CLAMP	1					

POWER PARTS By akawo

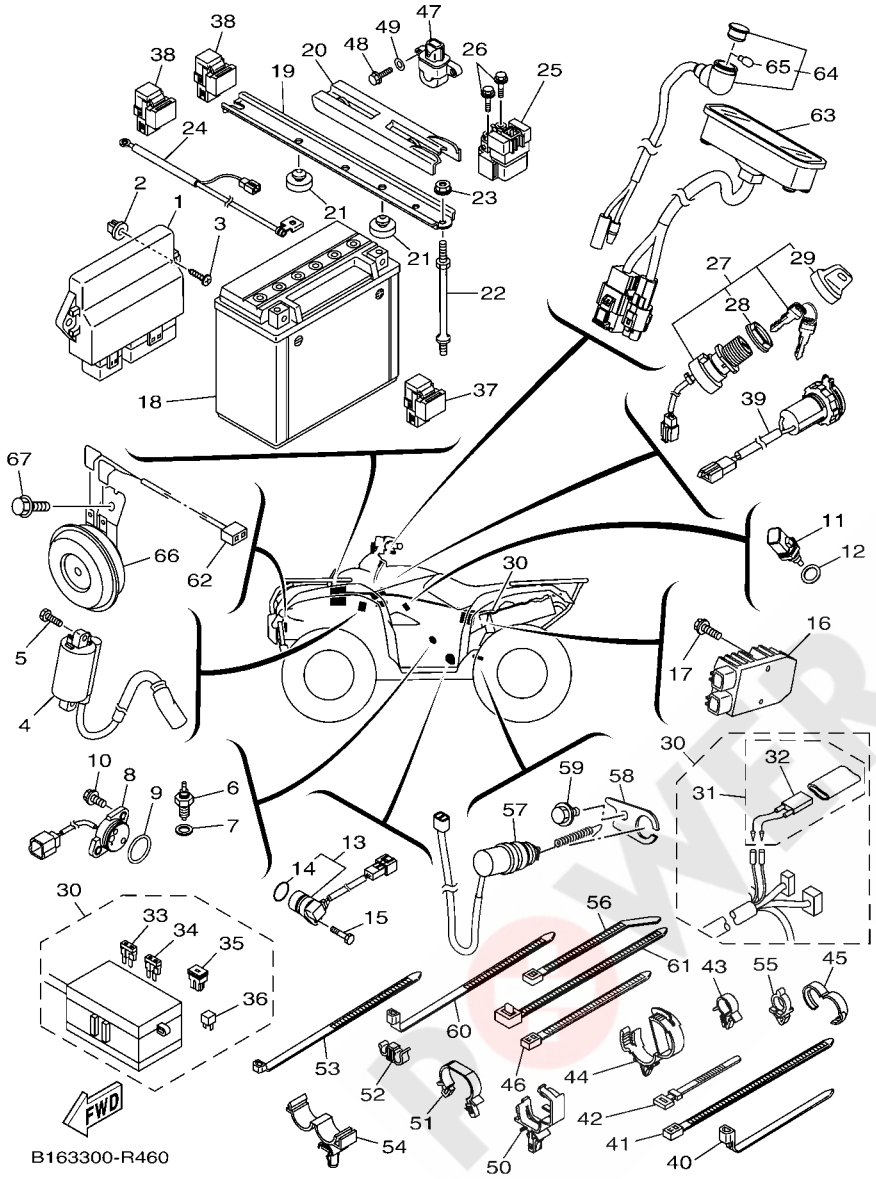

FIG. 46 ELECTRICAL 1

REF. NO.	PART NO.	DESCRIPTION	EUR					REMARKS
55	90464–10833	CLAMP	1					
56	90465–10098	CLAMP	2					
57	18P–82530–00	STOP SWITCH ASSY	1					
58	B16–21441–00	BRACKET, STOP SWITCH	1					
59	95822–06010	BOLT, FLANGE	1					
60	90465–13M11	CLAMP	1					
61	90464–13073	CLAMP	1					
62	3B4–82309–00	WIRE, SUB LEAD	1					
63	B16–83530–00	PILOT LIGHT ASSY	1					
64	B16–83582–00	PILOT LIGHT ASSY	1					
65	5GH–83516–00	.BULB (12V-1.7W T6.5)	1					
66	3B4–83371–00	HORN	1					
67	95812–06012	BOLT, FLANGE	1					

POWER PARTS By ARAMAD

FIG. 47 GRAPHICS

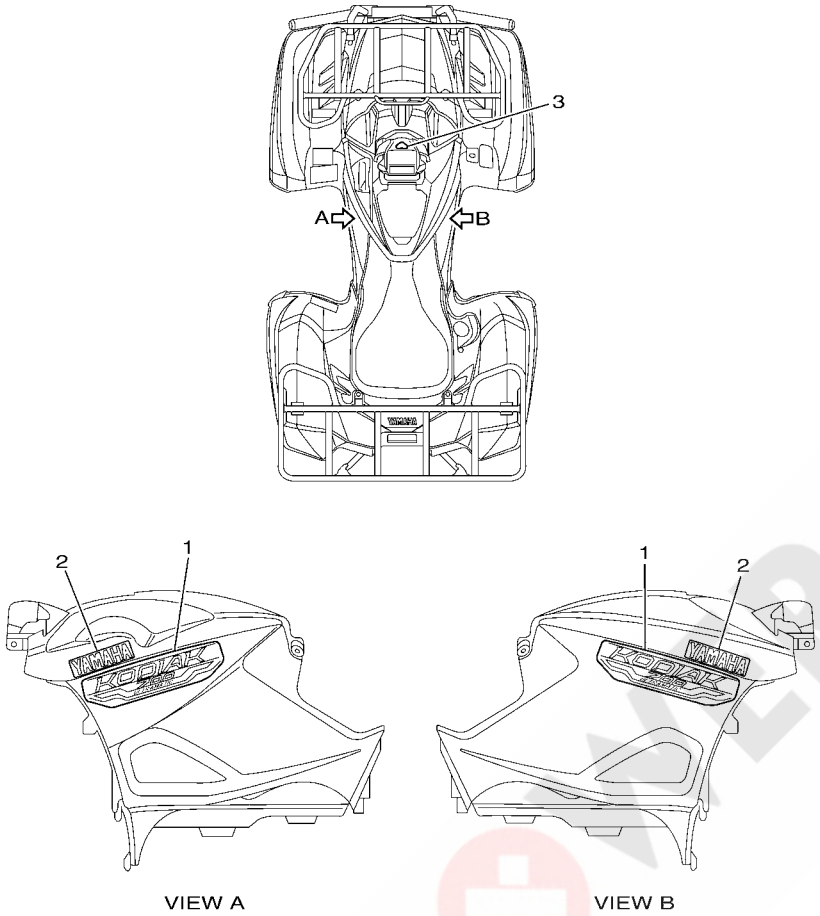

B161110-R470

REF. NO.	PART NO.	DESCRIPTION	EUR					REMARKS
1	B16–F1781–01	EMBLEM 1	2					
2	5UG–F153A–80	EMBLEM, YAMAHA	2					
3	B16–F6232–00	EMBLEM 3D	1					

POWER PARTS By 4x4&UAD

FIG. 48 EMBLEM & LABEL 1

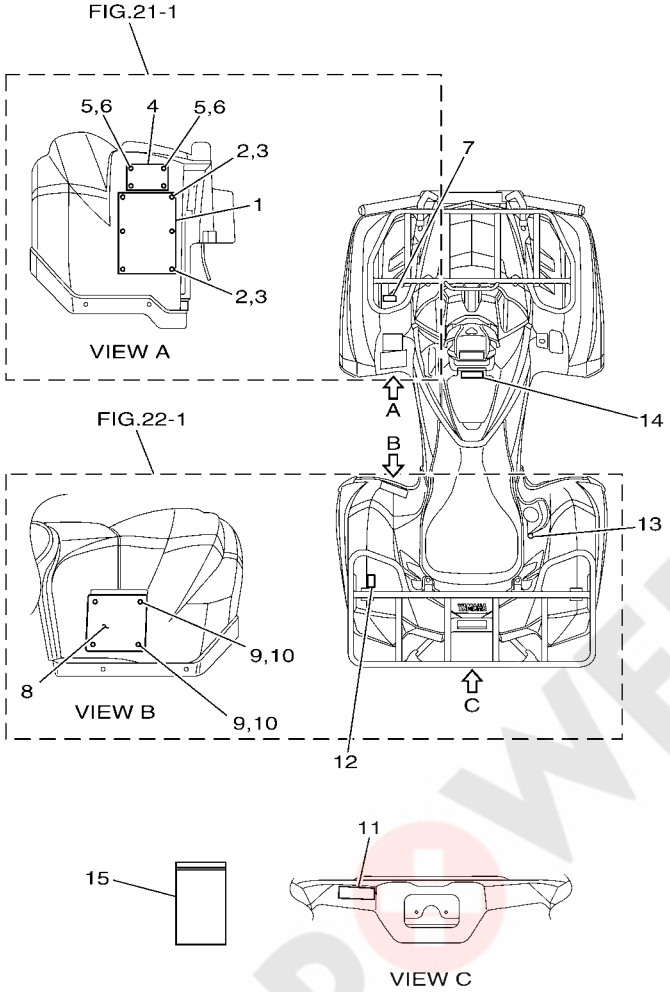

B163300-R480

REF. NO.	PART NO.	DESCRIPTION	EUR					REMARKS
1	1P0–F816R–00	LABEL, WARNING GENERAL INFO.	1					
2	4XE–F1539–10	RIVET	6					
3	4XE–F1549–00	WASHER, FENDER MOLD	6					
4	1HP–F811R–00	PLATE,AGE EUR.	1					
5	4XE–F1539–10	RIVET	4					
6	4XE–F1549–00	WASHER, FENDER MOLD	4					
7	B16–F817R–00	LABEL, LOAD LIMIT	1					
8	1HP–F816M–M0	LABEL, WARNING TIRE & LOAD	1					
9	4XE–F1539–10	RIVET	4					
10	4XE–F1549–00	WASHER, FENDER MOLD	4					
11	37S–F817S–00	LABEL, PULLING LOAD LIMIT	1					
12	B16–F817R–10	LABEL, LOAD LIMIT	1					
13	4XE–F415E–10	LABEL, CAUTION	1					
14	B16–F816N–01	LABEL, WARNING STORAGE	1					
15	1P0–F8186–01	POUCH	1					

POWER PARTS By 4WD

PART NO.	REF. NO.
214–11198–01	26 – 25
	27 – 25
B16–13160–00	10 – 15
1XD–13543–00	10 – 16
8FP–13556–00	10 – 7
B16–13750–00	10 – 1
1XD–13761–00	10 – 13
B16–13907–00	30 – 2
B16–13971–00	30 – 22
1XD–14147–00	10 – 14
5LP–14147–00	10 – 3
1UY–14155–00	10 – 11
1S3–14161–00	10 – 2
2C0–14216–00	10 – 8
8CC–14216–10	10 – 5
B16–14293–00	10 – 10
5YP–14562–00	10 – 12
3EG–14613–00	11 – 33
3B4–14759–01	11 – 31
2MB–14840–00	1 – 25
5UG–15371–00	26 – 26
B16–17530–00	17 – 8
3B4–17606–00	15 – 16
3B4–17611–00	15 – 27
3B4–17623–02	15 – 19
B16–17632–00	15 – 18
4WV–17639–10	15 – 23
4WV–17644–00	15 – 37
3B4–17645–00	15 – 21
3B4–17653–00	15 – 20
3B4–17660–10	15 – 30
4CW–17664–00	15 – 34
3B4–17670–10	15 – 31
4WV–17684–00	15 – 36
28P–18104–00	19 – 14
B16–18115–00	19 – 17
28P–18174–00	19 – 27
3B4–2113B–01	20 – 19
B16–21441–00	46 – 58
B16–21485–00	20 – 3
2PA–21541–00	30 – 25
3B4–21541–00	21 – 2
	21 – 10
B16–21652–00	22 – 2
3B4–21732–00	39 – 5
3B4–2174Y–00	23 – 17
3B4–2177K–00	23 – 13
3B4–2177N–00	23 – 20
1S3–21875–00	23 – 2
5KM–22149–10	29 – 13
	29 – 16
5KM–23448–00	35 – 12
	36 – 12
2NL–23517–00	35 – 13
	36 – 13
3B4–23579–01	29 – 3
	29 – 7
	32 – 10
	33 – 10
8K1–23814–00	28 – 1
5KM–23831–00	28 – 23
1UY–23841–01	28 – 24
1UY–23845–01	28 – 25
16B–2385L–10	25 – 6
16B–2385M–10	25 – 7
2GU–23872–00	28 – 18
28P–24380–00	30 – 9
1S3–24486–00	30 – 4
3B4–24491–00	30 – 3
2P5–24610–00	30 – 6
22W–24741–00	46 – 21
28P–2510F–03	35 – 17
	36 – 17
28P–2510F–04	32 – 15
	33 – 15
28P–2510G–00	32 – 17
	33 – 17
28P–2510G–01	35 – 19
	36 – 19
B16–2510H–00	35 – 18
	36 – 18
28P–2510H–01	32 – 16
	33 – 16
28P–2510J–01	32 – 14
	33 – 14
28P–2511H–00	32 – 25
	33 – 25
	35 – 27
	36 – 27
3B4–2511H–00	32 – 19
	33 – 19
B16–2511H–00	35 – 21
	36 – 21
28P–2512G–00	32 – 21
	33 – 21
	35 – 23
28P–2512G–00	36 – 23
3B4–2512G–00	32 – 20
	33 – 20
B16–2512G–00	35 – 22
	36 – 22
3B4–2512H–00	32 – 23
	33 – 23
	35 – 25
	36 – 25
3B4–2512J–00	32 – 22
	33 – 22
B16–2512J–00	35 – 24
	36 – 24
3B4–25182–00	32 – 24
	33 – 24
B16–25182–00	35 – 26
	36 – 26
28P–2518E–00	32 – 18
	33 – 18
B16–2518E–10	35 – 20
	36 – 20
B16–2530V–00	35 – 16
	36 – 16
B16–25355–00	26 – 49
3B4–2536E–00	35 – 28
	36 – 28
5D3–25689–00	45 – 18
B16–25727–00	45 – 10
3B4–2580T–02	34 – 5
3B4–2580U–02	34 – 20
2GU–25866–00	38 – 17
2PG–25876–00	38 – 26
3B4–25886–00	38 – 24
5DH–25916–00	34 – 18
	34 – 33
3JD–25917–00	34 – 9
	34 – 24
5DH–25919–00	34 – 10
	34 – 25
3JD–25926–00	34 – 14
	34 – 29
1UY–25926–51	34 – 12
	34 – 27
5DH–25933–00	34 – 17
	34 – 32
1UY–25937–51	34 – 8
	34 – 23
1UY–25938–51	34 – 13
1UY–25938–51	34 – 28
3JD–25961–00	34 – 15
	34 – 30
1NV–26129–00	37 – 14
B16–26154–00	45 – 11
B16–26164–00	45 – 19
B16–26250–00	37 – 4
28P–2625G–00	37 – 6
1NV–2625K–00	37 – 16
28P–2628F–00	37 – 5
28P–2628G–00	37 – 13
1NV–26304–00	37 – 12
B16–26311–00	37 – 23
B16–26341–00	37 – 24
B16–26351–00	39 – 30
B16–26374–00	26 – 50
B16–2637E–00	45 – 22
B16–2637F–00	37 – 22
1NV–26398–00	37 – 15
B16–26477–00	37 – 17
1NV–2811A–01	20 – 22
B16–42525–00	26 – 37
B16–4582E–00	26 – 44
B16–46101–00	26 – 1
3B4–46117–00	27 – 7
3B4–46117–10	27 – 7
3B4–46117–20	27 – 7
3B4–46117–30	27 – 7
3B4–46119–00	26 – 15
3B4–46119–10	26 – 15
3B4–46119–20	26 – 15
3B4–46119–30	26 – 15
3B4–46119–40	26 – 15
3B4–46119–50	26 – 15
5KM–46126–00	26 – 60
	27 – 33
B16–46126–00	26 – 9
B16–46127–00	26 – 12
B16–46127–10	26 – 12
B16–46127–20	26 – 12
B16–46127–30	26 – 12
B16–46127–40	26 – 12
B16–46127–50	26 – 12
3B4–46129–00	26 – 5
3B4–46134–00	27 – 11
3B4–46135–00	27 – 12
5KM–46136–00	26 – 63
	27 – 31
5KM–46137–00	26 – 62
	27 – 30
B16–4613F–00	26 – 35
1XD–46141–00	27 – 4
3B4–46142–00	27 – 22
B16–46144–00	26 – 8
4WV–46145–10	27 – 23
B16–46155–00	26 – 36
B16–46160–00	27 – 1
3B4–46161–00	27 – 3
3B4–46162–01	27 – 2
3B4–46163–00	27 – 14
3B4–46164–00	27 – 9
3B4–46166–00	27 – 10
3B4–461A0–00	26 – 7
3B4–4621F–00	26 – 17
3B4–4621F–10	26 – 17
3B4–4621F–20	26 – 17
3B4–4621F–30	26 – 17
B16–46265–00	26 – 47
5GH–46293–00	27 – 18
3B4–46316–00	26 – 13
B16–4631A–00	26 – 30
B16–4631E–00	26 – 41
3B4–46326–01	26 – 18
B16–46336–00	26 – 38
3B4–46344–00	26 – 33
3B4–46344–10	26 – 33
3B4–46344–20	26 – 33
3B4–46344–30	26 – 33
3B4–46344–40	26 – 33
3B4–46344–50	26 – 33
B16–46370–00	27 – 16
B16–46375–00	26 – 46
B16–46470–00	27 – 6
B16–46540–00	26 – 2
B16–46550–00	26 – 22
5KM–46559–00	26 – 66
	27 – 35
3B4–47359–00	27 – 15
3B4–67839–10	27 – 5
4D9–81168–00	46 – 14
28P–81815–00	42 – 7
28P–81826–00	42 – 6
4XV–8182A–00	42 – 9
4B5–81840–00	42 – 2
11H–81844–00	42 – 5
1FK–81847–00	42 – 4
3TB–81847–00	42 – 3
4B5–81871–00	42 – 8
28P–81890–00	42 – 1
3B4–81940–00	46 – 25
5DM–81950–00	46 – 37
8DM–81950–11	46 – 38
1D7–81960–01	46 – 16
3WP–81980–00	46 – 36
28P–82116–00	46 – 24
3B4–82122–00	21 – 26
1S3–82123–00	13 – 42
3B4–82129–00	46 – 20
3B4–82133–11	46 – 22
5PS–82151–00	46 – 35
5JJ–82151–20	46 – 33
5JJ–82151–30	46 – 34
4GB–82180–00	46 – 31
3B4–82309–00	46 – 62
B16–82320–00	46 – 4
3B4–8233W–10	21 – 25
5S7–82380–00	10 – 9
28P–82510–00	46 – 27
18P–82530–00	46 – 57
4GB–82560–00	46 – 32
3HN–82569–00	46 – 28
3B4–82576–00	46 – 47
3HN–82579–00	46 – 29
B16–82590–00	46 – 30
B16–82910–00	45 – 1
B16–82911–00	45 – 2
1S3–82913–00	37 – 19
5TG–82913–00	45 – 3
3B4–83371–00	46 – 66
5GH–83516–00	46 – 65
B16–83530–00	46 – 63
B16–83582–00	46 – 64
3B4–83755–00	46 – 13
2HT–83912–01	45 – 4
5TG–83923–00	45 – 20
437–83936–01	46 – 42
437–83936–11	46 – 46
1S3–83973–11	45 – 23
3B4–83976–00	45 – 24
1HP–83980–01	38 – 13
4KB–84314–01	43 – 1
5KM–84320–01	43 – 2
2GU–84332–00	43 – 5
2GU–84334–00	43 – 6

PART NO.	REF. NO.
5EH–84340–00	43 – 3
3FA–84710–00	44 – 1
1A2–84714–41	44 – 2
3B4–85885–00	10 – 6
8FP–85886–00	9 – 15
B16–8591A–00	46 – 1
B16–E1102–00	1 – 1
2MB–E111G–00	1 – 11
2MB–E1133–10	1 – 2
2MB–E1160–00	1 – 13
B16–E1166–00	1 – 17
2MB–E1179–00	1 – 3
2MB–E1181–00	1 – 5
2MB–E1191–00	1 – 8
2MB–E1193–00	1 – 12
2MB–E1195–00	8 – 21
	46 – 12
2MB–E1198–00	8 – 4
2MB–E119C–00	1 – 7
2MB–E1311–00	2 – 3
2MB–E131B–00	1 – 16
2MB–E1351–00	2 – 4
2MB–E1361–00	1 – 6
2MB–E1387–00	6 – 5
	6 – 14
2MB–E1388–00	9 – 2
2MB–E1400–00	3 – 1
2MB–E1412–10	3 – 2
2MB–E1415–00	3 – 6
2MB–E1422–10	3 – 3
2MB–E1425–00	3 – 13
2MB–E1428–00	16 – 10
2MB–E1429–00	16 – 23
2MB–E142A–00	16 – 24
2MB–E142B–00	16 – 28
2MB–E1436–00	3 – 24
2MB–E1446–00	3 – 4
2MB–E1447–00	3 – 19
2MB–E1456–00	8 – 13
2MB–E1459–00	3 – 22
	8 – 12
2MB–E1483–00	3 – 23
2MB–E1500–00	3 – 20
2MB–E1536–00	3 – 8
2MB–E1545–00	3 – 10
2MB–E1555–00	3 – 12
2MB–E1557–00	3 – 11
2MB–E1603–00	3 – 15

PART NO.	REF. NO.
2MB–E1604–00	3 – 15
2MB–E1605–00	3 – 15
2MB–E1631–00	3 – 14
2MB–E1633–00	3 – 16
2MB–E1634–00	3 – 17
2MB–E1635–00	3 – 14
2MB–E1636–00	3 – 14
2MB–E1651–10	3 – 7
2MB–E1681–10	3 – 5
2MB–E2111–00	4 – 1
2MB–E2113–00	4 – 4
2MB–E2117–00	4 – 5
2MB–E2118–00	4 – 6
2MB–E2119–00	4 – 7
2MB–E2121–00	4 – 2
2MB–E2126–00	4 – 3
2MB–E2129–00	4 – 8
2MB–E2153–00	4 – 10
2MB–E2168–A0	4 – 9
2MB–E2168–F0	4 – 9
2MB–E2168–H0	4 – 9
2MB–E2168–K0	4 – 9
2MB–E2168–L0	4 – 9
2MB–E2168–M0	4 – 9
2MB–E2168–N0	4 – 9
2MB–E2168–R0	4 – 9
2MB–E2168–T0	4 – 9
2MB–E2168–U0	4 – 9
2MB–E2168–V0	4 – 9
2MB–E2168–W0	4 – 9
2MB–E2168–X0	4 – 9
2MB–E2168–Y0	4 – 9
2MB–E2169–00	4 – 9
2MB–E2169–10	4 – 9
2MB–E2169–20	4 – 9
2MB–E2169–30	4 – 9
2MB–E2169–40	4 – 9
2MB–E2169–50	4 – 9
2MB–E2169–60	4 – 9
2MB–E2169–70	4 – 9
2MB–E2169–80	4 – 9
2MB–E2169–90	4 – 9
2MB–E2169–A0	4 – 9
2MB–E2169–E0	4 – 9
2MB–E2169–G0	4 – 9
2MB–E2169–J0	4 – 9
2MB–E2169–L0	4 – 9
2MB–E2170–00	5 – 1

PART NO.	REF. NO.
2MB–E2176–00	5 – 3
2MB–E2177–00	5 – 6
2MB–E2179–00	5 – 2
	5 – 5
2MB–E217A–00	5 – 10
2MB–E2180–00	5 – 4
2MB–E2190–00	5 – 12
2MB–E21E2–00	5 – 17
2MB–E2210–00	5 – 13
2MB–E2213–00	5 – 14
2MB–E2221–00	8 – 9
2MB–E2241–00	1 – 9
2MB–E2251–00	5 – 18
2MB–E2252–00	5 – 19
2MB–E2284–00	5 – 8
2MB–E2287–00	5 – 9
2MB–E22A1–00	17 – 7
B16–E2405–00	7 – 11
2MB–E2411–00	7 – 1
B16–E2413–00	7 – 2
B16–E2422–00	6 – 18
2MB–E2428–00	6 – 20
2MB–E2435–00	6 – 22
	7 – 3
2MB–E2438–00	13 – 5
2MB–E2439–00	6 – 3
	12 – 16
B16–E243E–00	6 – 11
B16–E243F–00	6 – 4
2MB–E243K–00	13 – 3
2MB–E243M–00	6 – 17
B16–E244G–00	6 – 9
2MB–E244H–00	13 – 6
B16–E244J–00	6 – 13
2MB–E2451–00	6 – 15
2MB–E2458–00	6 – 16
B16–E2460–00	7 – 10
1XD–E2462–00	7 – 14
2MB–E2469–00	6 – 6
B16–E2481–00	6 – 1
B16–E2484–00	6 – 12
B16–E2486–00	6 – 10
1HP–E2535–00	7 – 12
B16–E2576–00	7 – 6
B16–E2578–00	7 – 8
2MB–E2615–00	17 – 18
2MB–E2623–00	12 – 13
1HP–E2675–00	7 – 13

PART NO.	REF. NO.
2MB–E2842–00	5 – 11
2MB–E2843–00	6 – 8
2MB–E2858–00	8 – 26
2MB–E3161–00	8 – 25
2MB–E3165–00	8 – 15
2MB–E3166–00	8 – 20
2MB–E316F–00	8 – 17
2MB–E3171–00	8 – 14
2MB–E3181–00	8 – 18
2MB–E3300–00	8 – 1
2MB–E3354–00	3 – 21
2MB–E3355–00	8 – 11
B16–E3440–00	8 – 5
2MB–E3455–00	8 – 24
2MB–E3469–00	8 – 23
B16–E3470–00	8 – 7
B16–E3475–00	8 – 8
2MB–E3476–00	8 – 27
B16–E3573–00	8 – 6
2MB–E3574–00	20 – 5
2MB–E3586–00	9 – 1
2MB–E3610–00	1 – 15
2MB–E4005–00	13 – 25
B16–E4411–00	9 – 4
B16–E4412–00	9 – 5
B16–E4424–00	9 – 11
B16–E4437–10	9 – 6
B16–E443E–00	9 – 13
2MB–E4446–00	1 – 10
B16–E4450–00	9 – 9
B16–E4453–00	9 – 8
B16–E4455–00	9 – 7
B16–E4456–00	9 – 12
B16–E4457–00	9 – 10
2BG–E4611–01	11 – 1
2BG–E4627–00	11 – 2
B16–E463B–00	11 – 3
B16–E4703–00	11 – 16
1HP–E4714–00	11 – 4
1HP–E4718–00	11 – 21
1HP–E471C–00	11 – 23
1HP–E472C–00	11 – 24
1HP–E4733–00	11 – 27
2BG–E4755–00	11 – 18
1HP–E4758–00	11 – 12
1HP–E477U–00	11 – 26
2BG–E4780–00	11 – 17
2MB–E4814–00	16 – 33

PART NO.	REF. NO.
2MB–E482K–00	1 – 20
2BG–E4882–00	1 – 26
B16–E4883–00	1 – 27
2MB–E4889–00	1 – 22
2MB–E4890–00	1 – 21
2MB–E4D97–00	46 – 9
2MB–E4G97–00	13 – 18
2MB–E5100–00	12 – 1
B16–E5112–00	12 – 15
2MB–E5113–00	13 – 13
2MB–E511A–00	13 – 4
2MB–E511B–00	15 – 4
2MB–E511C–00	13 – 16
B16–E5158–00	12 – 10
2MB–E5163–00	15 – 2
2MB–E5167–00	12 – 2
2MB–E5168–00	13 – 15
2MB–E5169–00	13 – 17
2MB–E5175–00	12 – 3
2MB–E5179–00	13 – 7
2MB–E5181–00	13 – 28
	15 – 13
2MB–E5182–00	2 – 2
	2 – 6
2MB–E5184–00	12 – 5
	12 – 20
2MB–E5187–00	13 – 14
	41 – 4
B16–E5191–00	13 – 9
2MB–E5315–00	13 – 21
2MB–E5351–00	13 – 34
B16–E5362–00	12 – 14
2MB–E5363–00	12 – 4
2MB–E5365–00	13 – 33
2MB–E5379–00	13 – 32
2MB–E5381–00	13 – 26
2MB–E5383–00	17 – 3
2MB–E5384–00	46 – 7
2MB–E5388–00	12 – 18
2MB–E5409–00	13 – 1
B16–E5421–00	13 – 19
B16–E5431–00	13 – 31
2MB–E5451–00	13 – 8
2MB–E5453–00	13 – 20
2MB–E5463–00	15 – 12
B16–E546C–00	12 – 6
1HP–E5471–00	13 – 37
B16–E5472–00	13 – 40

PART NO.	REF. NO.
1HP–E5473–00	13 – 41
1HP–E5474–00	13 – 44
2MB–E5480–00	13 – 23
2MB–E5481–00	5 – 16
B16–E5481–00	12 – 9
2MB–E5481–10	7 – 5
	12 – 19
	19 – 12
	46 – 15
2MB–E5481–20	1 – 14
	2 – 1
	2 – 5
	5 – 15
	6 – 7
	13 – 12
2MB–E5481–30	8 – 2
	15 – 15
2MB–E5481–40	8 – 10
2MB–E5481–50	12 – 8
	13 – 11
	15 – 14
	42 – 10
2MB–E5481–60	6 – 2
	6 – 21
	7 – 4
	12 – 17
2MB–E5481–70	6 – 23
2MB–E5481–80	1 – 4
2MB–E5481–90	12 – 12
2MB–E5481–A0	20 – 7
2MB–E5481–B0	6 – 19
2MB–E5481–C0	12 – 11
2MB–E5482–00	5 – 20
	13 – 27
2MB–E5482–10	13 – 22
	13 – 29
2MB–E5482–20	19 – 6
2MB–E5482–30	13 – 30
B16–E5484–00	12 – 7
	13 – 36
2MB–E5485–00	8 – 19
2MB–E5512–00	14 – 5
2MB–E5515–00	14 – 1
2MB–E5517–01	14 – 3
2MB–E5521–00	14 – 4
2MB–E5522–00	14 – 2
2MB–E5590–00	14 – 6
2MB–E5596–00	13 – 2

PART NO.	REF. NO.
2MB–E5597–00	18 – 16
	18 – 24
2MB–E5693–00	13 – 24
2MB–E5744–00	15 – 6
2MB–E5768–00	13 – 35
2MB–E5768–10	46 – 10
2MB–E6134–00	15 – 11
2MB–E6181–00	3 – 18
B16–E6611–00	15 – 1
2MB–E6620–00	15 – 10
2MB–E662A–00	16 – 12
	16 – 17
	16 – 32
2MB–E6642–00	15 – 3
2MB–E6647–00	17 – 16
	17 – 24
2MB–E6664–00	15 – 8
2MB–E6717–00	15 – 9
2MB–E6777–00	14 – 7
2MB–E6777–10	1 – 23
2MB–E6777–20	41 – 3
2MB–E6819–00	15 – 5
B16–E7058–00	17 – 15
	17 – 23
2MB–E7059–00	16 – 27
2MB–E7116–00	16 – 9
2MB–E7126–00	16 – 16
2MB–E7136–00	16 – 19
2MB–E7154–00	16 – 22
2MB–E7156–00	16 – 2
2MB–E7158–00	16 – 4
2MB–E7166–00	16 – 3
B16–E7223–00	16 – 20
2MB–E7233–00	16 – 15
2MB–E7243–00	16 – 26
2MB–E7253–00	16 – 11
2MB–E7258–00	16 – 14
2MB–E7268–00	16 – 21
2MB–E7278–00	16 – 29
B16–E7285–00	16 – 18
2MB–E7412–00	17 – 2
2MB–E7413–00	17 – 10
2MB–E7417–50	17 – 5
2MB–E7417–60	17 – 5
2MB–E7417–70	17 – 5
2MB–E7417–80	17 – 5
2MB–E7417–90	17 – 5
2MB–E7417–A0	17 – 5

PART NO.	REF. NO.
2MB–E7417–B0	17 – 5
2MB–E7421–00	16 – 7
2MB–E7422–00	17 – 12
2MB–E7423–00	17 – 21
2MB–E7432–00	16 – 25
2MB–E7463–00	17 – 6
B16–E7473–00	16 – 8
2MB–E7499–00	17 – 13
	17 – 26
B16–E7521–00	17 – 1
2MB–E7523–00	16 – 30
2MB–E7531–00	17 – 19
2MB–E7531–10	17 – 19
2MB–E7531–20	17 – 19
2MB–E7531–30	17 – 19
2MB–E7531–40	17 – 19
2MB–E7531–50	17 – 19
2MB–E7531–60	17 – 19
2MB–E7551–00	17 – 9
2MB–E7582–00	16 – 13
2MB–E7583–00	16 – 31
2MB–E7589–00	17 – 11
B16–E761A–00	17 – 20
B16–E7641–00	15 – 26
2MB–E7642–00	17 – 25
2MB–E7648–00	15 – 28
2MB–E765G–00	17 – 4
2MB–E7668–00	15 – 29
	15 – 39
2MB–E7678–00	15 – 7
B16–E7681–00	16 – 1
2MB–E76F3–00	16 – 6
2MB–E76F4–00	17 – 17
2MB–E76F5–00	16 – 5
B16–E76G3–00	19 – 10
2MB–E7832–00	17 – 14
	17 – 22
B16–E8103–00	19 – 8
2MB–E8119–00	18 – 19
2MB–E8123–00	18 – 15
B16–E8124–00	18 – 3
1HP–E8125–00	19 – 23
B16–E8126–00	18 – 7
B16–E8135–00	18 – 6
2MB–E8137–00	19 – 3
2MB–E8138–00	19 – 5
B16–E8139–00	18 – 23
B16–E8140–00	18 – 22

PART NO.	REF. NO.
2MB–E8143–00	18 – 18
2MB–E8146–00	19 – 11
2MB–E8149–00	8 – 3
1HP–E8154–00	19 – 30
1HP–E8169–00	19 – 21
B16–E8171–00	18 – 2
1HP–E8172–00	19 – 29
B16–E8177–00	18 – 25
B16–E8183–00	19 – 4
1HP–E8190–00	19 – 20
2MB–E8191–00	19 – 7
1HP–E8196–00	19 – 24
B16–E8198–00	19 – 1
2MB–E8218–00	8 – 22
	18 – 17
B16–E8221–00	18 – 28
2MB–E8222–00	18 – 8
B16–E8318–00	18 – 21
B16–E8331–00	18 – 4
2MB–E8363–00	8 – 16
	18 – 20
	18 – 27
B16–E8380–00	19 – 9
2MB–E8413–00	19 – 2
B16–E8435–00	18 – 5
2MB–E8438–00	19 – 13
2MB–E8511–00	18 – 12
B16–E8512–00	18 – 13
B16–E8531–00	18 – 14
B16–E8540–00	18 – 1
2MB–E8542–00	18 – 9
B16–E8547–00	18 – 26
2MB–E8563–00	18 – 11
2MB–E8566–00	18 – 10
B16–F1110–00	20 – 1
2BG–F117A–00	1 – 29
1CU–F131H–00	28 – 13
B16–F147A–00	20 – 25
1HP–F147E–01	20 – 28
B16–F147F–00	20 – 30
B16–F1485–00	20 – 2
B16–F1500–30	21 – 1
B16–F1500–40	21 – 1
4XE–F1539–10	48 – 2
	48 – 5
	48 – 9
5UG–F153A–80	47 – 2
1CT–F1545–00	28 – 12

PART NO.	REF. NO.
4XE–F1549–00	48 – 3
	48 – 6
	48 – 10
1HP–F1552–00	21 – 35
1HP–F1553–00	21 – 39
B16–F1556–00	21 – 9
B16–F1556–20	21 – 9
1HP–F1575–00	21 – 36
B16–F1600–40	22 – 1
B16–F1600–50	22 – 1
B16–F1669–00	22 – 8
B16–F1711–00	23 – 14
B16–F1711–20	23 – 14
B16–F171A–00	23 – 8
B16–F171A–20	23 – 8
B16–F1721–00	23 – 21
B16–F1721–20	23 – 21
B16–F173M–00	23 – 18
B16–F173N–00	23 – 16
B16–F174A–00	23 – 15
1XD–F175B–00	21 – 31
1HP–F176E–00	23 – 7
B16–F177A–00	23 – 26
B16–F177B–00	23 – 12
B16–F177B–20	23 – 12
B16–F1781–01	47 – 1
1HP–F1871–01	23 – 1
1CT–F1957–00	28 – 7
1HP–F2171–00	24 – 1
1HP–F2172–00	24 – 4
1HP–F217M–00	24 – 7
1HP–F217N–00	24 – 10
B16–F2210–00	25 – 1
1HP–F2517–10	28 – 5
2BG–F2874–00	39 – 7
1HP–F2875–00	39 – 6
B16–F3350–00	29 – 22
B16–F3391–00	21 – 30
2BG–F3501–10	32 – 7
2BG–F3502–10	33 – 7
1HP–F3526–00	24 – 2
	24 – 5
	24 – 8
	24 – 11
	29 – 2
	29 – 6
	29 – 12
	29 – 15

PART NO.	REF. NO.
1HP–F3540–00	29 – 1
1HP–F3550–00	29 – 5
1HP–F3570–00	29 – 11
1HP–F3580–00	29 – 14
1CT–F3812–00	28 – 8
1ND–F3813–10	28 – 3
B16–F3816–00	28 – 19
1CT–F3868–00	28 – 9
1HP–F386G–00	25 – 10
1HP–F386H–00	25 – 11
1CT–F3894–00	28 – 11
B16–F3922–00	38 – 12
B16–F4110–00	30 – 1
B16–F4141–00	30 – 21
4XE–F415E–10	48 – 13
B16–F4181–00	30 – 20
B16–F4182–01	30 – 19
B16–F470F–10	31 – 2
B16–F4710–10	31 – 1
4XE–F4747–00	31 – 3
B16–F482J–00	40 – 13
B16–F482K–00	40 – 15
B16–F4841–00	40 – 8
B16–F4842–00	40 – 11
B16–F510D–00	32 – 5
	33 – 5
	35 – 5
	36 – 5
1HP–F512A–00	32 – 28
	33 – 28
	35 – 30
	36 – 30
1HP–F514A–00	32 – 12
	33 – 12
B16–F5180–00	32 – 1
	33 – 1
2BG–F530F–00	35 – 7
2BG–F532F–00	36 – 7
B16–F5390–00	35 – 1
	36 – 1
B16–F5807–00	38 – 2
1HP–F582T–00	34 – 1
	34 – 3
B16–F583T–00	38 – 1
B16–F5852–00	38 – 4
B16–F5854–00	38 – 3
B16–F585B–00	38 – 5
B16–F5867–00	38 – 7

PART NO.	REF. NO.
1HP–F5871–00	38 – 19
B16–F5872–00	38 – 16
1HP–F5873–00	38 – 18
B16–F5889–00	38 – 6
B16–F589F–10	38 – 10
B16–F6111–00	37 – 1
B16–F6124–00	37 – 3
B16–F6232–00	47 – 3
5FU–F6241–10	37 – 2
B16–F6332–00	38 – 8
1HP–F7211–00	39 – 24
1HP–F7414–00	11 – 20
5UH–F741A–10	39 – 8
	39 – 17
1HP–F7452–00	39 – 1
1HP–F7453–00	39 – 4
1HP–F7462–00	39 – 2
1HP–F7463–00	39 – 16
2BG–F8100–00	20 – 21
1HP–F811R–00	48 – 4
1HP–F816M–M0	48 – 8
B16–F816N–01	48 – 14
1P0–F816R–00	48 – 1
B16–F817R–00	48 – 7
B16–F817R–10	48 – 12
37S–F817S–00	48 – 11
1P0–F8186–01	48 – 15
B16–F8199–60	20 – 23
1HP–F8239–00	39 – 10
B16–F8309–00	21 – 15
5UH–F8349–00	21 – 19
B16–F839R–00	21 – 34
B16–F842M–00	40 – 4
B16–F842N–00	40 – 6
B16–F845N–00	40 – 1
1HP–F8488–00	20 – 32
2MB–G6122–00	3 – 9
1HP–G6172–00	26 – 58
1HP–G6173–00	27 – 28
1HP–G7491–00	25 – 5
B16–H1128–00	13 – 10
B16–H1410–00	41 – 1
2MB–H1450–00	41 – 2
5FU–H2100–20	46 – 18
1HP–H2128–00	46 – 19
1HP–H212B–01	21 – 20
1HP–H2176–00	21 – 27
1HP–H253E–00	21 – 22

PART NO.	REF. NO.
1HP–H253F–00	21 – 23
2MB–H2540–00	46 – 6
B16–H2540–10	46 – 8
1HP–H254B–00	46 – 39
1HP–H254E–00	21 – 24
2MB–H431W–00	5 – 7
2MB–H5790–00	46 – 11
3B4–W0045–00	34 – 16
3B4–W0045–10	34 – 31
3B4–W0047–00	34 – 7
	34 – 22
1UY–W0048–50	34 – 11
	34 – 26
3B4–W0057–00	34 – 6
	34 – 21
90101–05033	45 – 6
90105–06176	19 – 16
90105–06639	20 – 8
90105–08161	34 – 19
	34 – 34
90105–08237	28 – 14
90105–10131	25 – 2
	29 – 23
90105–10211	24 – 3
	24 – 6
	24 – 9
	24 – 12
	29 – 19
90105–10212	35 – 14
	36 – 14
90105–10219	20 – 9
90105–10237	20 – 12
	20 – 16
90105–10876	28 – 6
90105–12065	20 – 15
90105–12803	20 – 14
90109–06043	21 – 3
	21 – 11
90109–06172	19 – 31
	21 – 18
	39 – 11
	39 – 19
90109–06202	20 – 26
	20 – 31
	23 – 29
90109–06214	20 – 27
	20 – 29
90109–06798	45 – 7

PART NO.	REF. NO.
90109–08101	34 – 2
	34 – 4
90109–08237	26 – 29
90111–06137	39 – 13
	39 – 21
90111–06814	39 – 12
	39 – 20
90114–10014	32 – 6
	33 – 6
	35 – 6
	36 – 6
90119–05193	21 – 5
90119–06152	21 – 4
	21 – 12
	21 – 17
	21 – 21
	21 – 37
	21 – 40
	22 – 4
	22 – 5
	22 – 6
	23 – 6
	23 – 11
	23 – 25
90119–08118	40 – 10
90119–10044	40 – 14
	40 – 16
90123–08002	45 – 8
90149–04278	37 – 7
90157–04006	15 – 24
90159–05053	23 – 32
90170–06228	19 – 18
90170–10010	28 – 27
90170–36279	15 – 38
90171–10001	28 – 28
90171–12001	29 – 9
	29 – 17
90179–05523	23 – 31
90179–08030	45 – 9
90179–10020	32 – 4
	33 – 4
	35 – 4
	36 – 4
90179–12005	26 – 11
90179–20016	32 – 27
	33 – 27
	35 – 29
	36 – 29

PART NO.	REF. NO.
90183–05008	21 – 29
	43 – 7
90183–051A0	21 – 6
90183–06053	21 – 8
	21 – 14
	21 – 28
	21 – 38
	21 – 41
	22 – 3
	23 – 19
	23 – 22
90183–06071	21 – 32
90183–061A3	30 – 11
90185–10011	20 – 4
	20 – 10
90185–10012	24 – 13
	25 – 3
	29 – 20
	29 – 24
	35 – 15
	36 – 15
90185–12002	20 – 17
90185–14009	28 – 21
90201–047R9	15 – 25
90201–05015	11 – 15
90201–05037	11 – 9
90201–06036	19 – 15
	19 – 25
	30 – 24
90201–06078	39 – 14
	39 – 22
90201–06097	44 – 3
90201–08087	26 – 31
90201–10035	20 – 11
	20 – 13
	24 – 14
	25 – 4
	25 – 9
	29 – 21
	45 – 16
90201–10118	38 – 22
90201–12029	26 – 10
90201–12361	20 – 18
90201–13015	26 – 48
90201–14021	28 – 20
90201–14023	39 – 26
90201–25634	26 – 4
90209–06012	7 – 17

PART NO.	REF. NO.
90209–10229	28 – 29
90240–06076	39 – 32
90267–489U9	39 – 9
	39 – 18
90269–05055	19 – 28
90269–07010	21 – 16
	21 – 33
	23 – 23
90336–28053	28 – 4
90338–07007	45 – 14
90338–08226	46 – 2
90338–26004	40 – 2
90340–10001	27 – 17
90340–14002	26 – 23
90340–14029	26 – 24
	27 – 24
90381–17067	35 – 10
	36 – 10
90387–06113	7 – 18
90387–06M19	30 – 28
90387–07021	30 – 17
90401–10015	38 – 21
90430–10003	27 – 19
90445–070F1	27 – 26
90445–074F6	26 – 64
90445–08840	23 – 4
90445–08841	23 – 3
90445–09220	44 – 5
90445–09828	30 – 12
90445–09829	30 – 7
90450–45806	11 – 5
	11 – 29
90450–59009	9 – 17
90450–72004	9 – 3
90450–99805	11 – 22
90460–85135	13 – 39
	13 – 45
90464–09013	46 – 52
90464–10833	46 – 55
90464–12045	46 – 53
90464–13073	46 – 61
90464–14004	30 – 23
90464–15157	46 – 43
90464–15195	46 – 40
90464–16001	46 – 45
90464–16012	46 – 54
90464–17006	1 – 31
90464–18015	1 – 32

PART NO.	REF. NO.
90464–20010	10 – 18
	38 – 20
90464–20181	46 – 44
90464–20237	46 – 50
90464–23002	1 – 19
90464–24230	46 – 51
90464–25003	30 – 26
90464–32801	30 – 27
90464–40825	20 – 20
	46 – 41
90465–10098	46 – 56
90465–13M11	46 – 60
90467–07029	26 – 65
	27 – 27
90467–08003	23 – 5
90467–09006	30 – 8
	30 – 13
90467–140A4	1 – 18
90467–150A2	1 – 24
90467–17089	1 – 28
90467–220A1	9 – 14
90467–26189	7 – 7
	7 – 9
90480–01400	30 – 16
90480–01558	23 – 10
	23 – 28
90480–13398	13 – 43
	21 – 7
	21 – 13
90480–13567	13 – 38
	23 – 9
90480–15235	7 – 15
90480–16807	22 – 7
90480–18290	30 – 14
90501–121A2	37 – 25
	39 – 31
90501–12743	45 – 12
90501–180A2	26 – 40
90501–20361	26 – 57
	27 – 29
90501–300A1	45 – 15
90501–650A0	15 – 35
90506–20014	39 – 27
90506–30006	11 – 11
90520–10027	23 – 27
90520–50800	23 – 24
90605–502U1	23 – 30
91312–04008	10 – 17

PART NO.	REF. NO.
91401–20012	39 – 34
91401–20020	28 – 30
91402–20012	26 – 51
91402–20025	28 – 22
91490–25020	29 – 10
	29 – 18
91702–06018	26 – 53
92012–06010	11 – 7
92012–06012	11 – 13
92012–06014	45 – 21
92012–06016	45 – 13
92502–06012	10 – 4
92902–04600	38 – 15
92902–05600	37 – 21
	46 – 49
92902–06200	11 – 8
	11 – 14
92902–06600	26 – 52
92902–08200	26 – 54
92907–06200	39 – 33
93101–35001	15 – 17
93102–17008	26 – 56
93102–25081	28 – 16
93102–25099	28 – 17
93102–35031	26 – 21
93104–09025	37 – 11
93104–41119	15 – 32
93105–45007	26 – 34
93105–46001	27 – 13
93210–44545	15 – 33
93210–64297	20 – 24
93211–59001	15 – 22
93305–00602	32 – 8
	33 – 8
	35 – 8
	36 – 8
93306–00613	27 – 8
93306–00704	26 – 19
93306–203YN	28 – 15
93306–205U0	26 – 14
93306–207U0	26 – 20
93306–30534	26 – 16
93332–00046	26 – 3
93332–00053	26 – 6
93410–22039	26 – 61
	27 – 34
93450–22119	32 – 26
	33 – 26

POWERPARTS

PART NO.	REF. NO.
93515–32029	26 – 45
93610–14002	26 – 27
	26 – 43
93700–06004	35 – 11
	36 – 11
93900–00813	32 – 3
	33 – 3
	35 – 3
	36 – 3
94108–12817	32 – 2
	33 – 2
94110–12814	35 – 2
	36 – 2
95022–06008	46 – 26
95022–06012	11 – 19
95022–08012	26 – 32
95302–06600	39 – 29
95302–06800	30 – 5
95302–10700	28 – 26
95307–05700	37 – 10
95312–06700	19 – 19
95602–06100	45 – 5
95602–10200	25 – 8
95607–05100	37 – 9
95702–06300	39 – 15
	39 – 23
	44 – 4
95702–06500	11 – 10
	38 – 11
	46 – 23
95702–08500	11 – 32
95802–06035	30 – 15
	30 – 18
95812–06010	9 – 18
	40 – 5
	40 – 7
95812–06012	1 – 30
	20 – 34
	38 – 25
	38 – 27
	46 – 67
95812–06014	27 – 20
95812–06016	19 – 26
95812–06020	7 – 16
	46 – 17
95812–06025	38 – 23
95812–08012	39 – 3
	40 – 9

PART NO.	REF. NO.
95812–08014	25 – 12
	40 – 3
	40 – 12
95812–08030	28 – 2
95812–08040	11 – 30
	27 – 21
95812–10035	20 – 6
	20 – 33
95822–06010	46 – 59
95822–08012	11 – 28
95822–08016	26 – 55
95822–08035	26 – 28
	26 – 42
97002–05016	46 – 48
97002–06016	30 – 10
97012–06016	46 – 5
97012–08080	28 – 10
97022–06014	39 – 28
97702–50520	9 – 16
97702–60025	46 – 3
98502–03540	43 – 4
98502–04012	38 – 14
98502–05020	37 – 20
98502–06012	11 – 6
	11 – 25
98507–05020	37 – 8
98702–04012	38 – 9
98902–05016	43 – 8
98902–06010	32 – 13
	33 – 13
98907–04008	37 – 18
99001–08600	45 – 17
99001–10600	39 – 25
99002–06600	19 – 22
99002–09600	26 – 39
99009–19400	26 – 59
	27 – 32
99009–30400	29 – 4
	29 – 8
	32 – 11
	33 – 11
99009–55500	32 – 9
	33 – 9
	35 – 9
	36 – 9

POWER PARTS By 4x4UAD