YAMAHA

PARTS CATALOGUE

YXM700PE (1XP3) EUROPE

1N1XP-300E1

( )

YAMAHA GENUINE Parts & Accessories

2017/12/25

NEWS NO.	DATE	COMMENT
PE0-MC-130047	Oct.,10,2013	COR:YXM700(1XD/1XP)FIG.21 FRONT FENDER LIST/ILLUST. CORRECTION
PE0-MC-140009	Mar.,19,2014	MOD:YXM700(1XD*/1XP*) FIG.7 LIST REVISION
PE0-MC-140043	Jul.,18.2014	COR:YXM700(1XD*/1XP*) FIG.32 SEAT 2 ILLUSTRATION CORRECTION
PE0-MC-150061	Aug.,24,2015	MOD:FIG.52 ELECTRICAL 2 LIST/ILLUSTRATION REVISION
PE0-MC-150103	Dec.,11,2015	COR:YXM700(1XD,1XP) FIG.9 INTAKE LIST/ILLUST. CORRECTION

POWER PARTS By 4x4QUAD

NEWS NO.	DATE	COMMENT
PE0-MC-160063	Jun.,14,2016	MOD:YXM7(1XD*/1XP*) ELECTRICAL 2 LIST REVISION
PE0-MC-160113	Sep.,9,2016	COR:YXM700 FIG.25,26 or 27 DRIVE SHAFT ILLUSTRATION CORRECTION
PE0-MC-170060	Jun.,1,2017	MOD:1XD/1XP/BD9/B42 SIDE COVER LIST/ILLUST. REVISION
PE0-MC-170126	Nov.,3,2017	COR:1XD/1XP/BD9/B42 FIG.27,28,29 LIST CORRECTION

POWER PARTS By AHMAD

YXM700PE
PARTS CATALOGUE
©2013 by Yamaha Motor Co., Ltd.
1st edition, August 2013
All rights reserved.
Any reprinting or unauthorized use
without the written permission of
Yamaha Motor Co., Ltd.
is expressly prohibited.
Printed in Japan.

POWER PARTS By 4x4QUAD

FOREWORD

This Parts Catalogue is related to the parts for the model(s) on the cover page. When you are ordering replacement parts, please refer to this Parts Catalogue and quote both part numbers and part names correctly.

1. Modifications or additions which have been made after the issue of the Parts Catalogue will be announced in the Parts News.
   It is advisable that you make the necessary corrections to the Parts Catalogue according to the Parts News.

2. Abbreviations
   The following abbreviations are used in this Parts Catalogue.

   "UR" Use specified parts number.
   "UN" Use as many as needed.
   "AP" Alternate Parts
   "LM" Locally Made (Parts need to be ordered locally)
   "F#" Frame No. (Applicable machine No.)
   "O/S" Over Size

3. The number of components for assembly
   - Parts, which are to be supplied in an assembly, are listed with a dot (.) in front of the part name as shown below.
   - The numeral appearing to the right of each component part indicates the quantity of parts for each assembly unit.

PART NO.	DESCRIPTION	Q'TY	REMARKS
2F5–83310–60	FRONT FLASHER LIGHT ASSY	2	
115–83311–60	.BULB (6V–18W)	1	

4. Applicable colours of graphics are represented in the "REMARKS" as shown below.

PART NO.	DESCRIPTION	Q'TY	REMARKS
2N4–24110–00–X5	FUEL TANK COMP.	2	MXR
3J1–24240–10	.GRAPHIC, FUEL TANK	1	FOR MXR

5. Note that the illustrations for reference in finding parts numbers are not to be used for assembling. When assembling, please use the applicable service manual.

6. The asterisk (*) before a reference number indicates modified items after the first edition.

POWER PARTS By 4x4UAE

7. Applicable Serial No.

Engine Serial No.

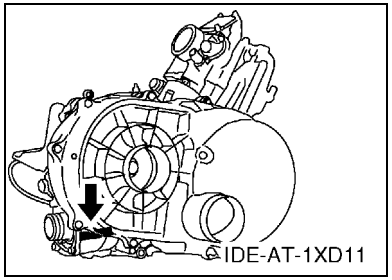

Frame Serial No.

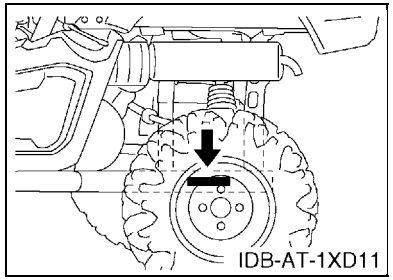

8. Applicable Colour Code (The (*) mark shows Model colour.)

Abbreviation	Colour Name	Colour Code
PDG(*)	PASTEL DEEP GREEN	00K0
RTR(*)	ROMANTIQUE ROUGE	00TR

9. Quantity Column Information

Column No.	Name Of Q'ty Column	Destination
1	EUR	EUROPE

POWER PARTS By 4x4UAD

MODEL LABEL

(1) A label called "Model Label" is affixed in the location as indicated in (3) below.
When using this parts catalogue, please be sure to cross–reference the "model code – production code No." in the catalogue with the "model code – production code No." indicated on the Model Label affixed onto the product concerned.

(2) "Model Label" Indication

a b
○ xxxx – xxx
● x c

a: Model Type Code
b: Production Code No.
c: Colouring Type

○ 4TW1–010
● A

(3) Model Label Affixing Location

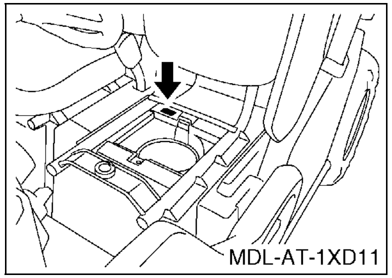

(4) Colouring Information

Model Code	Colouring Type Code	Colour Code	Colour Name	Abbrevia- tion
1XP3	A	00TR	ROMANTIQUE ROUGE	RTR
	B	00K0	PASTEL DEEP GREEN	PDG

(5) Model Code – Production Code Number of Model Listed in This Parts Catalogue

Model Code	Production Code No.	Country (destination)
1XP3	010	FRANCE
		UNITED KINGDOM

Model Code	Production Code No.	Country (destination)

CONTENTS

ENGINE

CYLINDER HEAD 1
CYLINDER 3
CRANKSHAFT & PISTON 4
VALVE 6
CAMSHAFT & CHAIN 7
WATER PUMP 8
RADIATOR & HOSE 10
OIL PUMP 12
INTAKE 13
THROTTLE BODY ASSY 1 15
EXHAUST 16
CRANKCASE 17
CRANKCASE COVER 1 18
STARTER CLUTCH 20
CLUTCH 21
TRANSMISSION 23
MIDDLE DRIVE GEAR 25
SHIFT CAM & FORK 27
SHIFT SHAFT 28

CHASSIS

FRAME 30
FRONT FENDER 31
SIDE COVER 33
SIDE COVER 2 35
REAR ARM 36
DRIVE SHAFT 37
FRONT DIFFERENTIAL 39
REAR SUSPENSION 42
FRONT SUSPENSION & WHEEL 43
STEERING 44
FUEL TANK 46
SEAT 48
SEAT 2 50
FRONT WHEEL 51
FRONT WHEEL 2 53
FRONT BRAKE CALIPER 55
REAR WHEEL 57
REAR WHEEL 2 59
REAR BRAKE CALIPER 61
REAR BRAKE CALIPER 2 63
PEDAL WIRE 65
MASTER CYLINDER 66
STAND & FOOTREST 68
CARRIER 69
GUARD 71
GUARD 2 72
GENERATOR 74
STARTING MOTOR 75
METER 76
HEADLIGHT 77
TAILLIGHT 78
ELECTRICAL 1 79
ELECTRICAL 2 81
EMBLEM & LABEL 1 82

INDEX

NUMERICAL INDEX 84

POWER PARTS

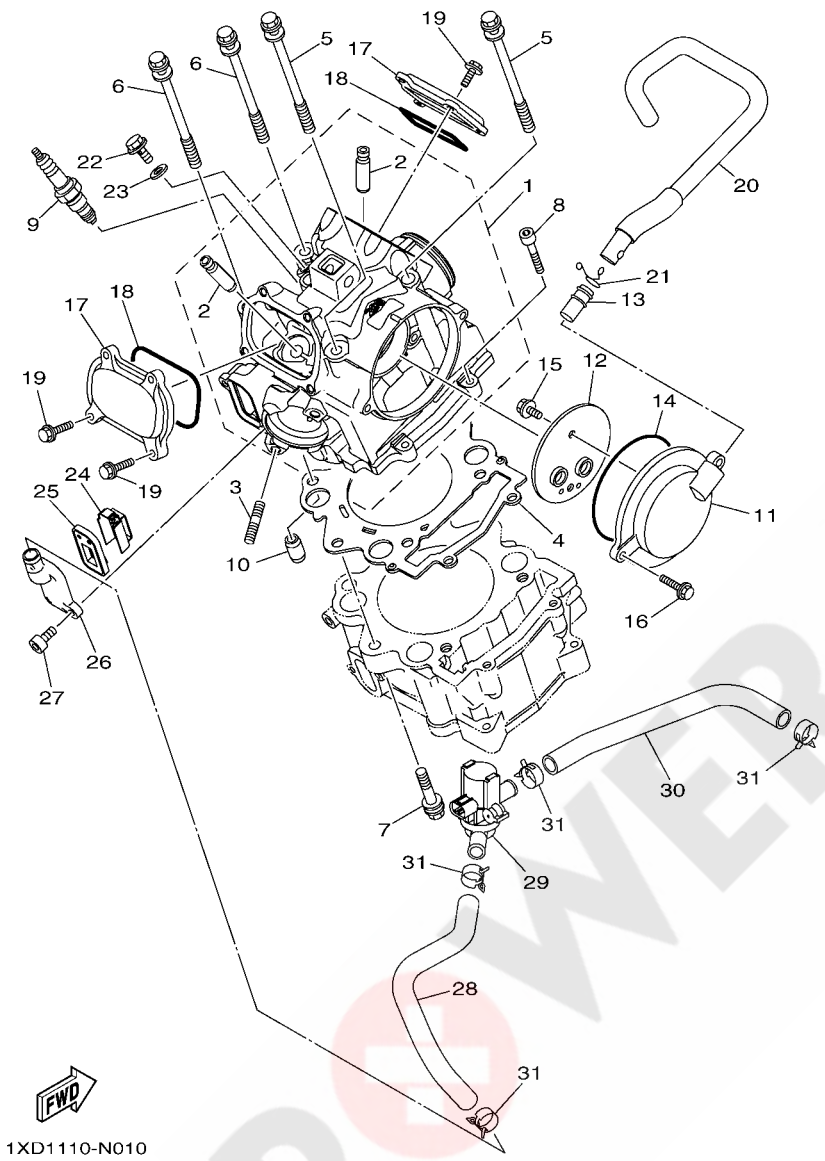

FIG. 1 CYLINDER HEAD

REF. NO.	PART NO.	DESCRIPTION	EUR					REMARKS
1	2BG–11102–00	CYLINDER HEAD ASSY	1					
2	4G0–11133–11	.GUIDE, VALVE 1	4					
3	95612–08625	BOLT, STUD	2					
4	3B4–11181–00	GASKET, CYLINDER HEAD 1	1					
5	90109–09003	BOLT	2					
6	90109–09002	BOLT	2					
7	90109–09005	BOLT	2					
8	91312–06030	BOLT	2					
9	94701–00420	PLUG, SPARK (NGK CPR7EA)	1					
10	93612–16254	PIN, DOWEL	2					
11	3B4–11185–00	COVER, CYLINDER HEAD SIDE 3	1					
12	3B4–11165–10	PLATE, BREATHER	1					
13	371–11167–01	PIPE, BREATHER 2	1					
14	93210–96601	O-RING	1					
15	95022–06012	BOLT, FLANGE	2					
16	95022–06020	BOLT, FLANGE	2					
17	1S3–11186–00	COVER, CYLINDER HEAD SIDE 2	2					
18	93210–78544	O-RING	2					
19	95022–06020	BOLT, FLANGE	8					
20	1XD–11166–00	PIPE, BREATHER 1	1					
21	90467–140A4	CLIP	1					
22	90401–08004	BOLT, UNION	1					
23	90430–08119	GASKET	1					
24	2BG–1482K–00	PLATE	1					
25	5JW–14890–00	REED VALVE ASSY	1					
26	5JW–14889–00	CAP, CASE	1					
27	90110–06175	BOLT, HEXAGON SOCKET HEAD	2					

POWER PARTS By 4x4QUAD

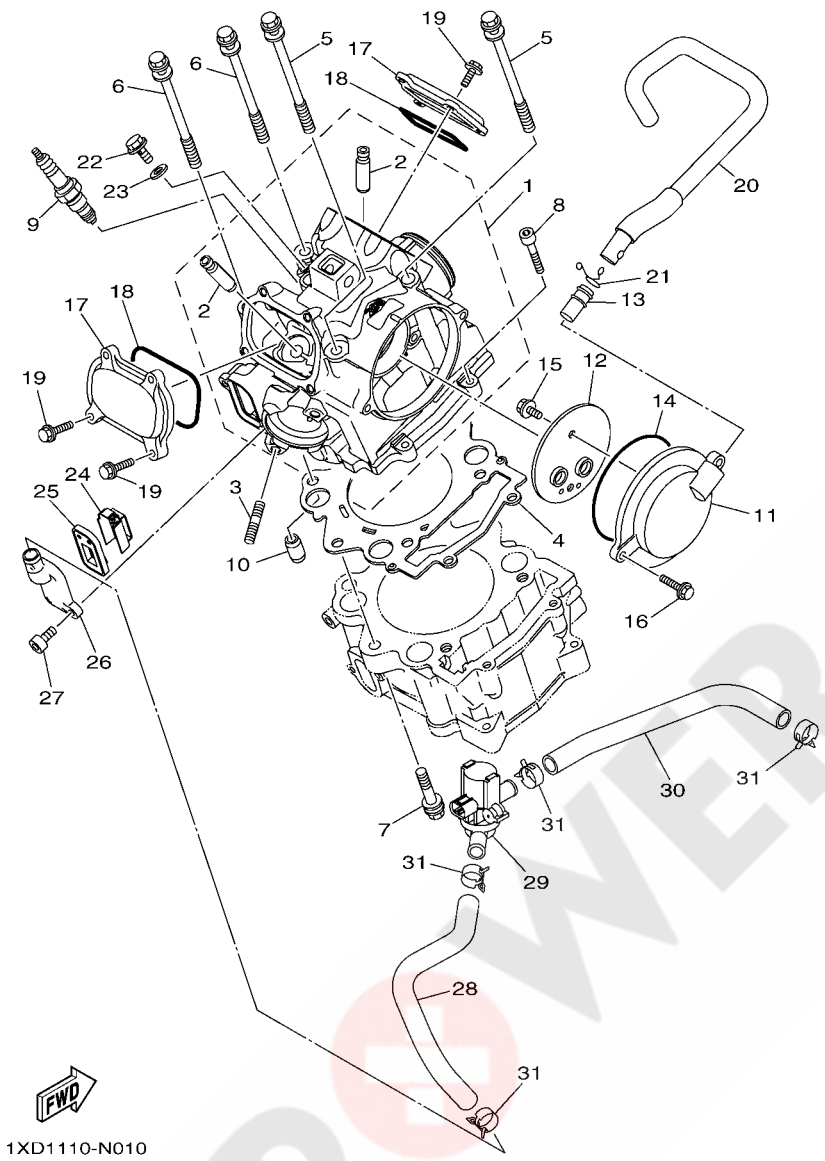

FIG. 1 CYLINDER HEAD

REF. NO.	PART NO.	DESCRIPTION	EUR					REMARKS
28	1XD–E4881–00	HOSE, BEND 1	1					
29	2BG–14840–00	AIR CUT VALVE ASSY	1					
30	1XD–E4882–00	HOSE, BEND 2	1					
31	90467–17089	CLIP	4					

POWER PARTS By 4xQUAD

FIG. 2 CYLINDER

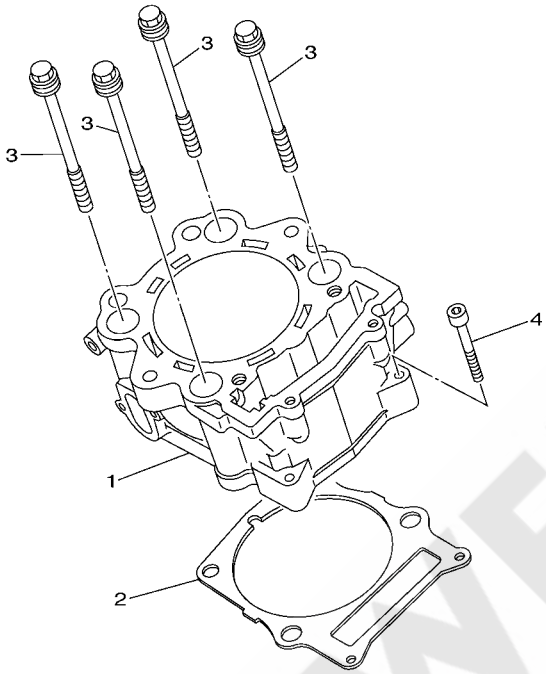

5B41100-G020

REF. NO.	PART NO.	DESCRIPTION	EUR					REMARKS
1	3B4–11311–10	CYLINDER 1	1					
2	1S3–11351–00	GASKET, CYLINDER	1					
3	90119–10023	BOLT, WITH WASHER	4					
4	91312–06040	BOLT	2					

POWER PARTS By 4xQUAD

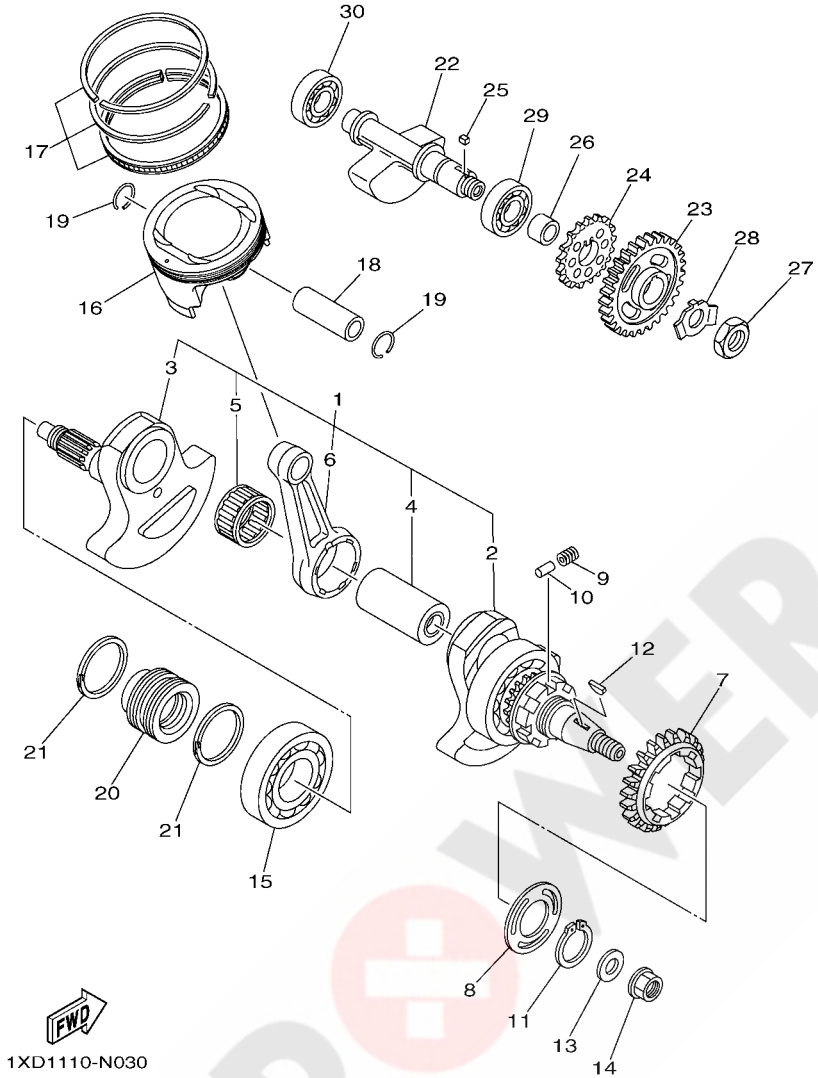

FIG. 3 CRANKSHAFT & PISTON

REF. NO.	PART NO.	DESCRIPTION	EUR					REMARKS
1	2BG–11400–00	CRANKSHAFT ASSY	1					
2	3B4–11401–09	.CRANK SUB ASSY 1	1					
3	3B4–11402–09	.CRANK SUB ASSY 2	1					
4	5VK–11681–01	.PIN, CRANK 1	1					
5	93310–84037	.BEARING	1					
6	2BG–11651–00	.ROD, CONNECTING	1					
7	1HP–11536–00	GEAR, DRIVE (44T)	1					
8	5KM–11565–00	WASHER, BEARING COVER	1					
9	90501–220A1	SPRING, COMPRESSION	8					
10	93606–09002	PIN, DOWEL	4					
11	99009–35400	CIRCLIP	1					
12	90280–05001	KEY, WOODRUFF	1					
13	90201–16013	WASHER, PLATE	1					
14	90179–16004	NUT	1					
15	93306–30810	BEARING	1					
16	2BG–11631–00	PISTON (STD)	1					
17	1S3–11603–10	PISTON RING SET (STD)	1					
18	5VK–11633–00	PIN, PISTON	1					
19	93450–24154	CIRCLIP	2					
20	3B4–16181–00	SPACER 1	1					
21	2BG–11447–00	SEAL, CRANK	2					
22	2BG–11454–00	WEIGHT 1	1					
23	1HP–11531–10	GEAR, BALANCE WEIGHT	1					
24	1HP–13354–00	SPROCKET, DRIVE	1					
25	90282–05013	KEY, STRAIGHT	1					
26	90387–24001	COLLAR	1					
27	90170–18003	NUT	1					

POWER PARTS By QUAD

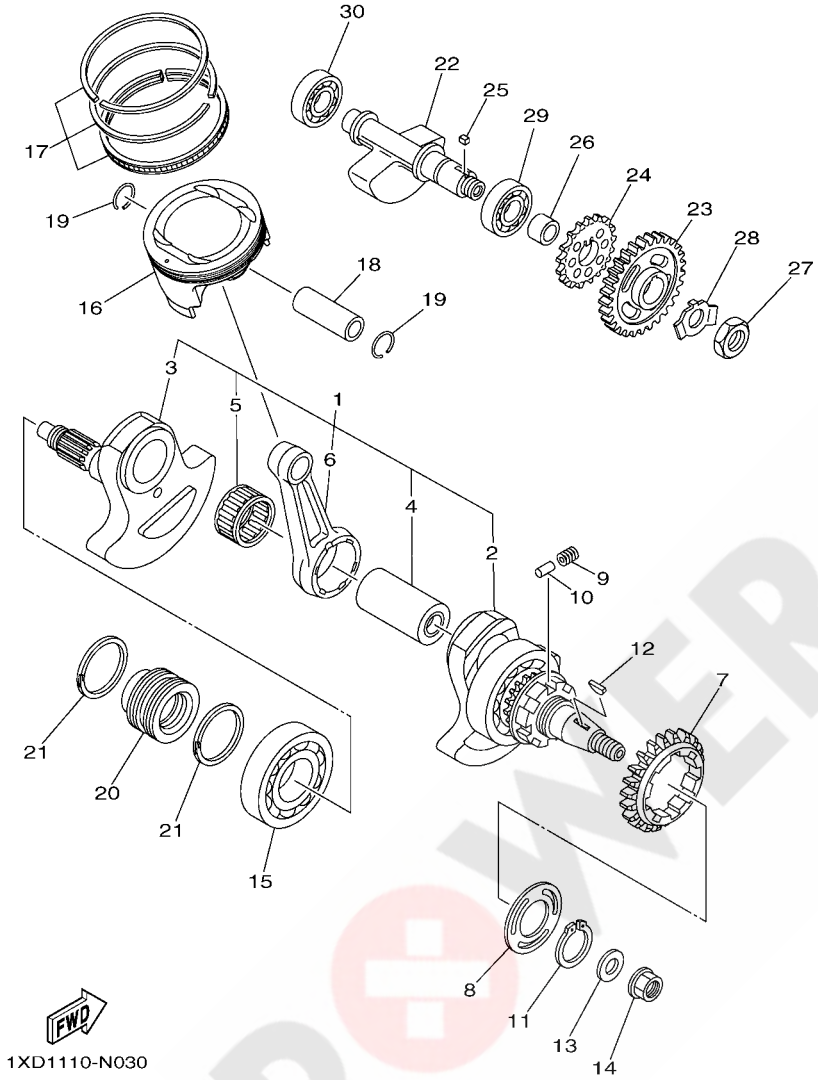

FIG. 3 CRANKSHAFT & PISTON

REF. NO.	PART NO.	DESCRIPTION	EUR					REMARKS
28	90215–18001	WASHER, LOCK	1					
29	93306–30534	BEARING	1					
30	93306–30438	BEARING	1					

POWER PARTS By 4xQUAD

FIG. 4 VALVE

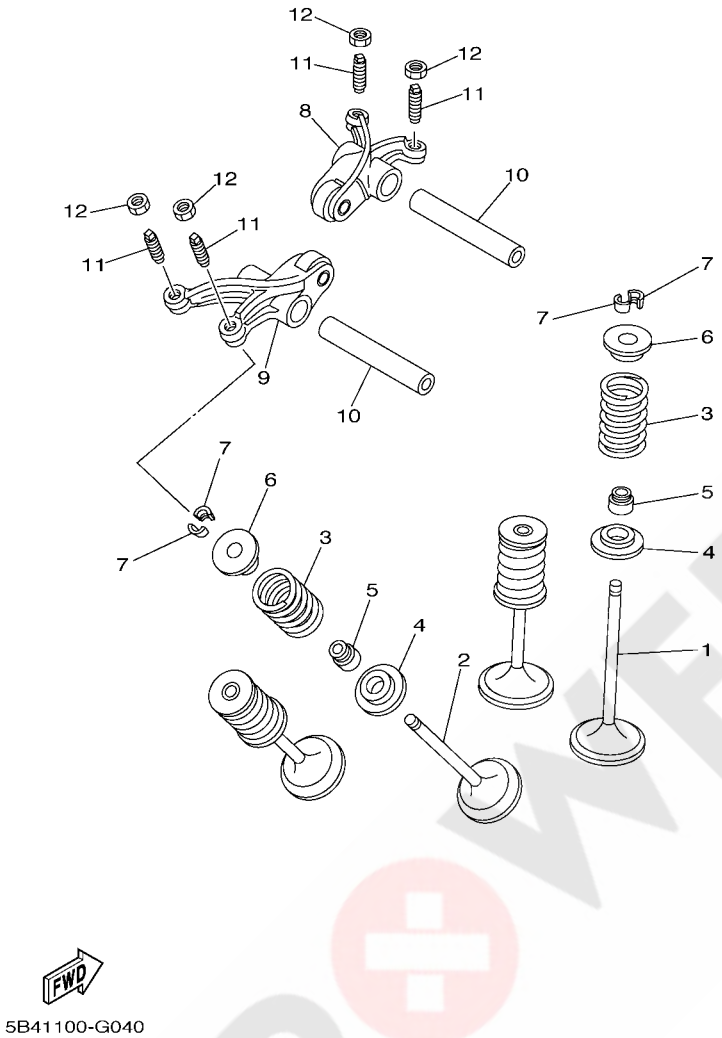

REF. NO.	PART NO.	DESCRIPTION	EUR					REMARKS
1	5VK–12111–00	VALVE, INTAKE	2					
2	5VK–12121–00	VALVE, EXHAUST	2					
3	5VK–12113–00	SPRING, VALVE INNER	4					
4	1PE–12116–00	SEAT, VALVE SPRING	4					
5	5H0–12119–00	SEAL, VALVE STEM	4					
6	3YF–12117–01	RETAINER, VALVE SPRING	4					
7	4G0–12118–00	LOCK, VALVE SPRING RETAINER	8					
8	5VK–12151–00	ARM, VALVE ROCKER	1					
9	5VK–12161–00	ARM, VALVE ROCKER 2	1					
10	5VK–12146–00	SHAFT, ROCKER	2					
11	5XT–12159–00	SCREW, VALVE ADJUSTING	4					
12	90170–06128	NUT	4					

POWER PARTS By SQUAD

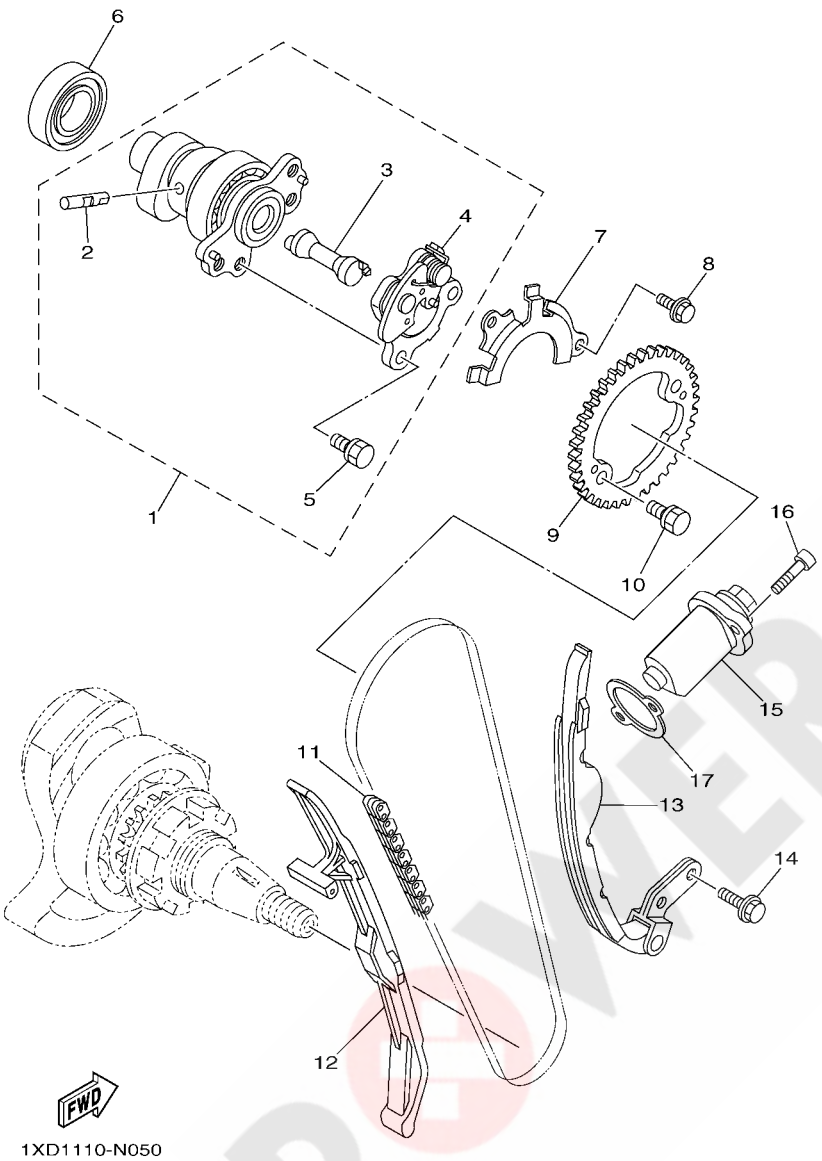

FIG. 5 CAMSHAFT & CHAIN

REF. NO.	PART NO.	DESCRIPTION	EUR					REMARKS
1	2BG–12170–00	CAMSHAFT ASSY 1	1					
2	5VK–12284–00	.PIN, DECOMPRESSION LEVER	1					
3	1S3–12290–00	.LEVER, DECOMPRESSION SPRING	1					
4	1S3–12280–01	.DECOMPRESSION ASSY	1					
5	90105–07006	.BOLT, FLANGE	2					
6	93306–07209	BEARING	1					
7	5VK–1111F–00	PLATE	1					
8	90105–06078	BOLT, FLANGE	2					
9	1S3–12176–00	SPROCKET, CAM CHAIN	1					
10	90105–07006	BOLT, FLANGE	2					
11	94591–57126	CHAIN (98XRH2010-126M)	1					
12	3B4–12231–01	GUIDE, STOPPER 1	1					
13	3B4–12241–00	GUIDE, STOPPER 2	1					
14	90105–06082	BOLT, FLANGE	2					
15	3TB–12210–00	TENSIONER ASSY, CAM CHAIN	1					
16	91312–06025	BOLT	2					
17	4DW–12213–00	GASKET, TENSIONER CASE	1					

POWER PARTS
By axoum

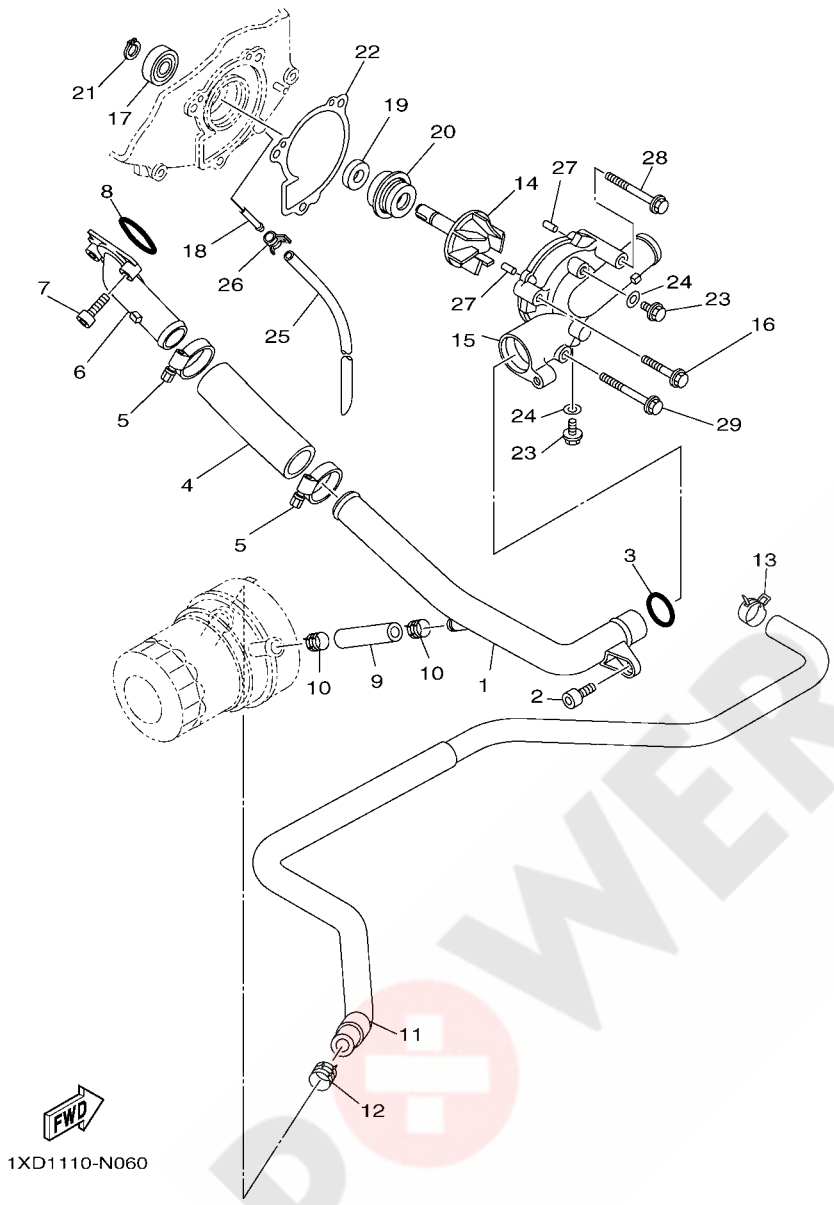

FIG. 6 WATER PUMP

REF. NO.	PART NO.	DESCRIPTION	EUR					REMARKS
1	1XD–12481–00	PIPE 1	1					
2	91312–06012	BOLT	1					
3	93210–21190	O-RING	1					
4	90445–29002	HOSE (L88)	1					
5	90450–32015	HOSE CLAMP ASSY	2					
6	5KM–12469–00	JOINT 1	1					
7	91312–06020	BOLT	2					
8	93210–33786	O-RING	1					
9	90445–16018	HOSE (L58)	1					
10	90467–15054	CLIP	2					
11	1XD–1243E–00	HOSE 2	1					
12	90467–15054	CLIP	1					
13	90467–15054	CLIP	1					
14	3B4–12450–00	IMPELLER SHAFT ASSY	1					
15	5B4–12422–00	COVER, HOUSING	1					
16	95022–06030	BOLT, FLANGE	1					
17	93306–00006	BEARING	1					
18	5D3–1243K–00	PIPE, DRAIN	1					
19	93101–10090	OIL SEAL	1					
20	11H–12438–10	SEAL, MECHANICAL	1					
21	99009–10400	CIRCLIP	1					
22	3B4–12428–00	GASKET, HOUSING COVER 2	1					
23	95022–06010	BOLT, FLANGE	2					
24	90430–06014	GASKET	2					
25	90445–07340	HOSE (L310)	1					
26	90467–07093	CLIP	1					
27	93604–10011	PIN, DOWEL	2					

POWER PARTS By 4xQUAD

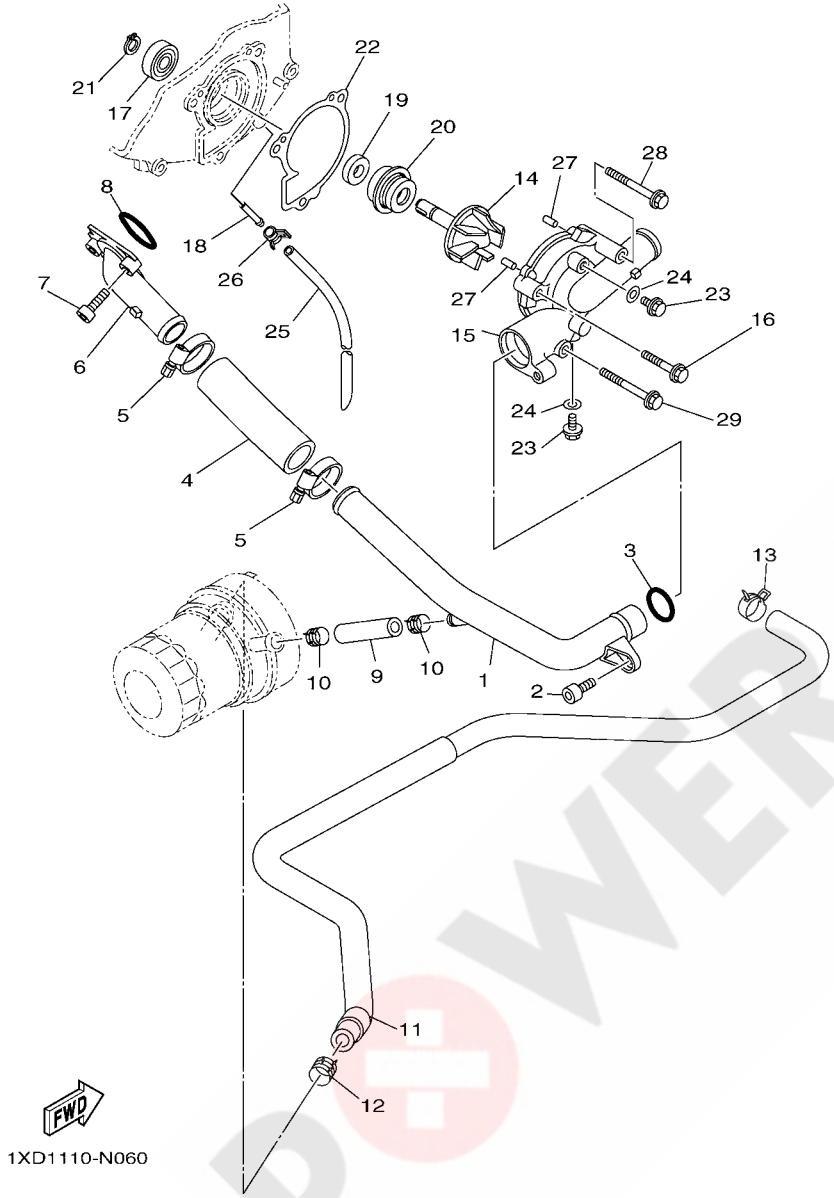

FIG. 6 WATER PUMP

REF. NO.	PART NO.	DESCRIPTION	EUR					REMARKS
28	95022–06050	BOLT, FLANGE	1					
29	95022–06050	BOLT, FLANGE	1					

POWER PARTS By 4xQUAD

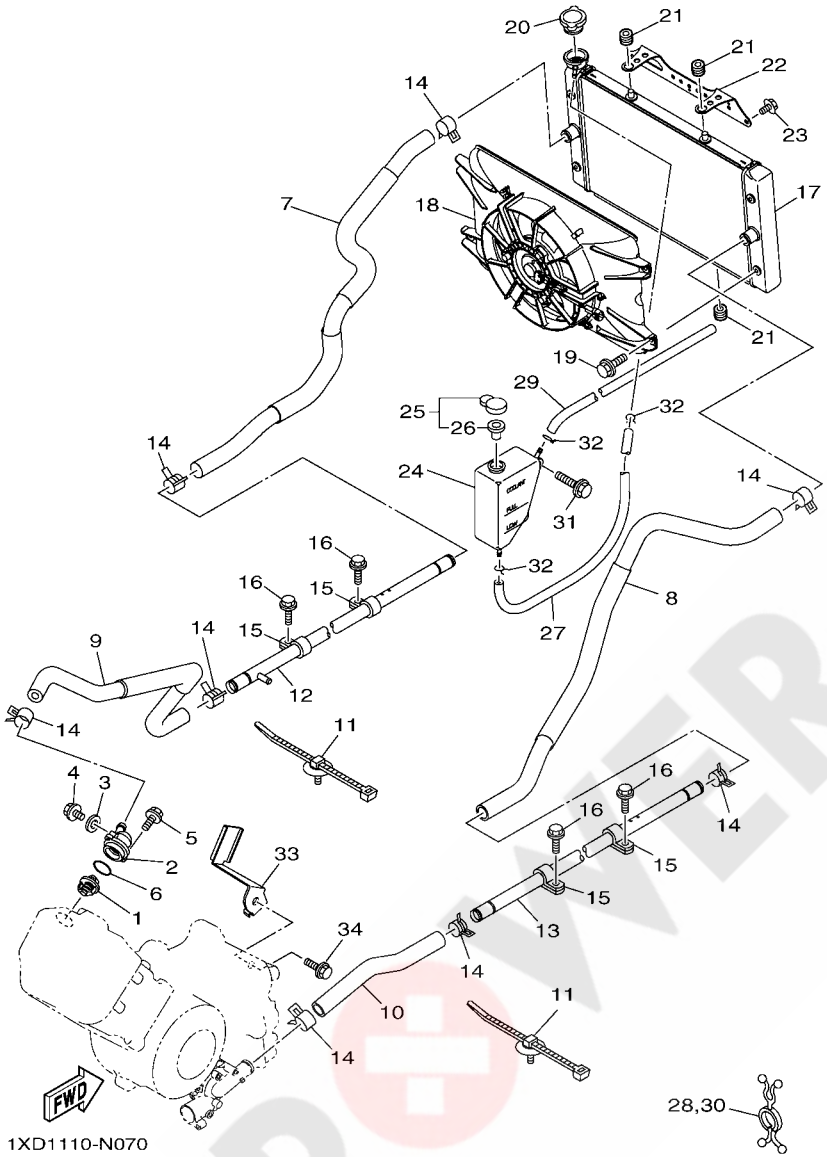

FIG. 7 RADIATOR & HOSE

REF. NO.	PART NO.	DESCRIPTION	EUR					REMARKS
1	1XD–12411–00	THERMOSTAT	1					
2	5B4–12413–00	COVER, THERMOSTAT	1					
3	90430–06014	GASKET	1					
4	95022–06010	BOLT, FLANGE	1					
5	95022–06020	BOLT, FLANGE	2					
6	93210–41042	O-RING	1					
7	1XD–E2576–00	HOSE 1	1					
8	1XD–E2577–00	HOSE 2	1					
9	1XD–E2578–00	HOSE 3	1					
10	1XD–E2579–00	HOSE 4	1					
11	1NS–F1338–00	CLAMP	5					
12	1XD–E2564–00	PIPE, WATER	1					
13	1XD–E2483–00	PIPE 3	1					
14	90467–26189	CLIP	8					
15	90461–12800	CLAMP	4					
16	90105–06831	BOLT, FLANGE	4					
17	1XD–E2461–00	RADIATOR COMP	1					
18	1XD–E2405–00	BLOWER ASSY	1					
19	1XD–E2675–00	BOLT, BLOWER HOLDING	4					
20	1XD–E2462–00	CAP, RADIATOR	1					
21	90480–15235	GROMMET	4					
22	1XD–E2518–00	BRACKET, WATER COOLER	1					
23	90119–06868	BOLT, WITH WASHER	2					
24	1XD–F1871–00	TANK, RECOVERY	1					
25	1AA–21815–00	CAP	1					
26	1AA–21874–00	.GASKET	1					
27	90445–08846	HOSE (L920)	1					

POWER PARTS By 4xQUAD

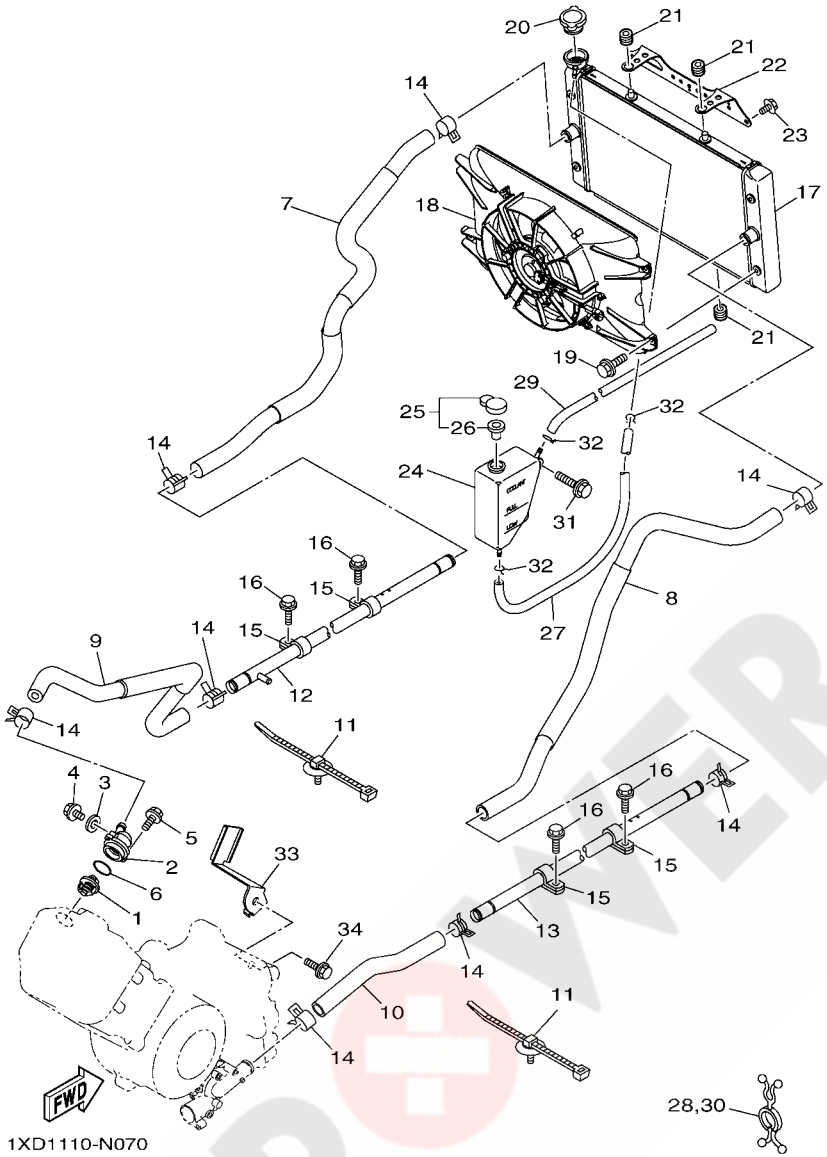

FIG. 7 RADIATOR & HOSE

REF. NO.	PART NO.	DESCRIPTION	EUR					REMARKS
28	90464–29179	CLAMP	1					
29	90445–08845	HOSE (L760)	1					
30	90464–29179	CLAMP	1					
31	90119–06868	BOLT, WITH WASHER	2					
32	90467–08003	CLIP	3					
33	1XD–E2443–00	STAY	1					
34	95822–10040	BOLT, FLANGE	1					

POWER PARTS By 4xQUAD

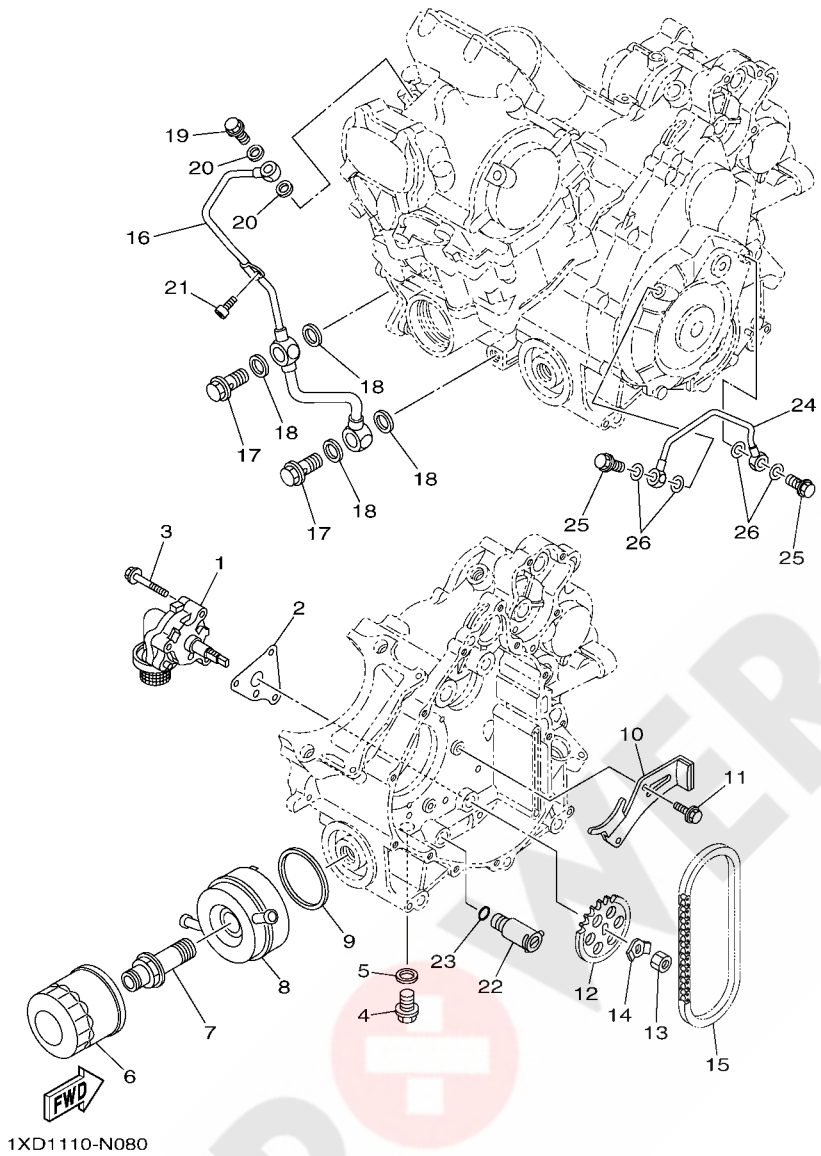

FIG. 8 OIL PUMP

REF. NO.	PART NO.	DESCRIPTION	EUR					REMARKS
1	3B4–13300–00	OIL PUMP ASSY	1					
2	3B4–13329–00	GASKET, PUMP COVER	1					
3	95022–06040	BOLT, FLANGE	3					
4	90340–14132	PLUG, STRAIGHT SCREW	1					
5	214–11198–01	GASKET	1					
6	5GH–13440–50	ELEMENT ASSY, OIL CLEANER	1					
7	90401–20009	BOLT, UNION	1					
8	1XD–13470–00	OIL COOLER ASSY	1					
9	1XD–13475–00	GASKET	1					
10	3B4–12221–00	GUIDE, STOPPER 3	1					
11	90105–06082	BOLT, FLANGE	2					
12	3B4–13355–00	SPROCKET, DRIVEN	1					
13	95312–10600	NUT	1					
14	90215–10008	WASHER, LOCK	1					
15	94580–31074	CHAIN (DID 25HT)	1					
16	3B4–13171–00	PIPE, DELIVERY 2	1					
17	90401–14118	BOLT, UNION	2					
18	90430–14043	GASKET	4					
19	90401–10024	BOLT, UNION	1					
20	90430–10188	GASKET	2					
21	91312–06012	BOLT	1					
22	25G–13490–00	RELIEF VALVE ASSY	1					
23	93210–10096	O-RING	1					
24	28P–13161–00	PIPE, DELIVERY 1	1					
25	90401–08006	BOLT, UNION	2					
26	90430–08119	GASKET	4					

POWER PARTS By ekquad

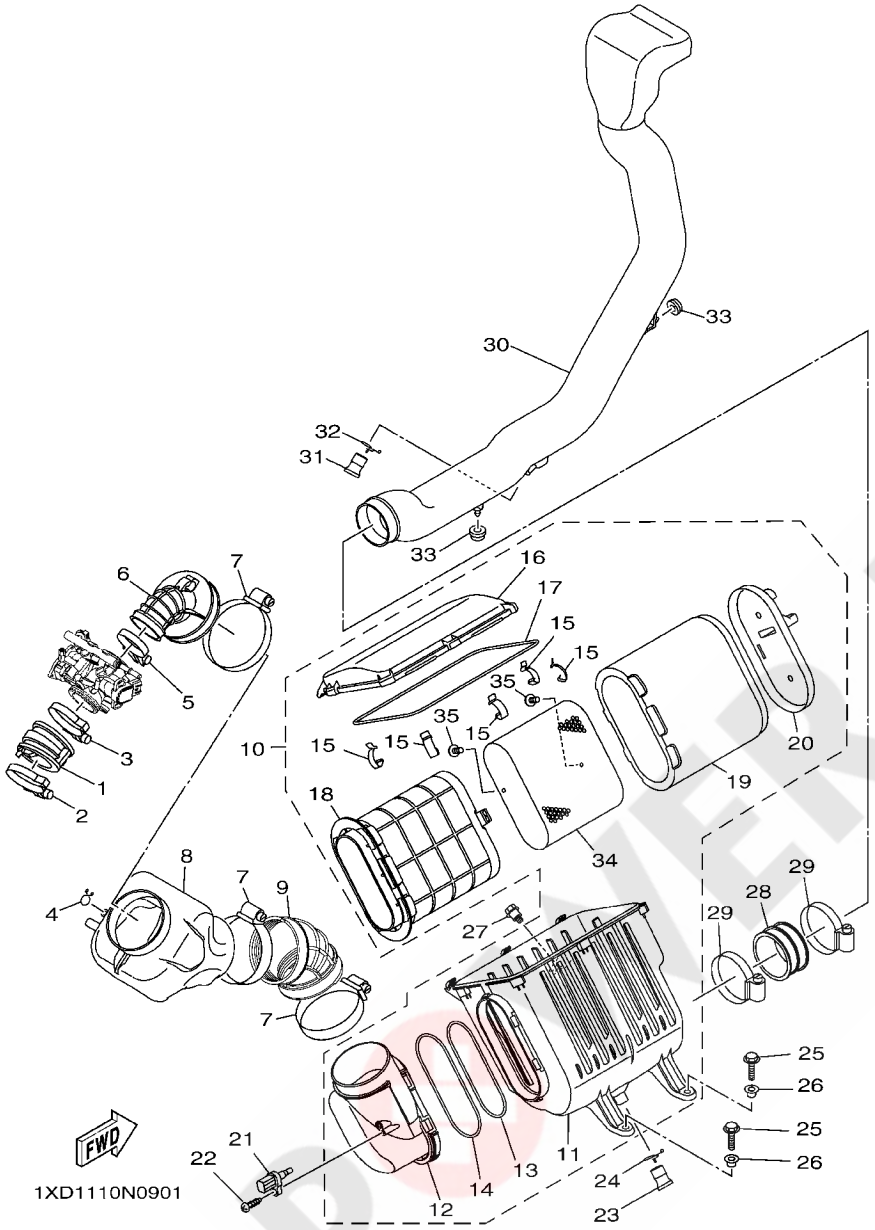

FIG. 9 INTAKE

REF. NO.	PART NO.	DESCRIPTION	EUR					REMARKS
1	5B4–13586–00	JOINT, CARBURETOR 1	1					
2	90450–72004	HOSE CLAMP ASSY	1					
3	90450–72004	HOSE CLAMP ASSY	1					
4	90467–140A4	CLIP	1					
5	90450–59009	HOSE CLAMP ASSY	1					
6	1XD–E4453–00	JOINT, AIR CLEANER 1	1					
7	90450–99004	HOSE CLAMP ASSY	3					
8	1XD–E4431–00	SILENCER, INTAKE 1	1					
9	1XD–E4463–00	JOINT, AIR CLEANER 2	1					
10	1XD–E4410–00	AIR CLEANER ASSY.	1					
11	1XD–E4411–00	.CASE, AIR CLEANER 1	1					
12	1XD–E4458–00	.GUIDE	1					
13	1XD–E4462–00	.SEAL	1					
14	1XD–E4467–00	.SEAL	1					
15	3B4–14424–00	.CLIP, CAP FITTING	5					
16	1XD–E4412–00	.CAP, CLEANER CASE 1	1					
17	1XD–E4452–00	.SEAL	1					
18	1XD–E4472–00	.PLATE, ELEMENT	1					
19	1XD–E4451–00	.ELEMENT, AIR CLEANER	1					
20	1XD–E4417–00	.COVER 1	1					
21	8FP–85886–00	SENSOR, AIR TEMPERATURE	1					
22	97702–50520	SCREW, TAPPING	1					
23	59V–14457–00	SEAL	1					
24	90467–220A1	CLIP	1					
25	90105–06833	BOLT, FLANGE	2					
26	90387–07037	COLLAR	2					
27	90109–06262	BOLT	1					

POWER PARTS By KOUAD

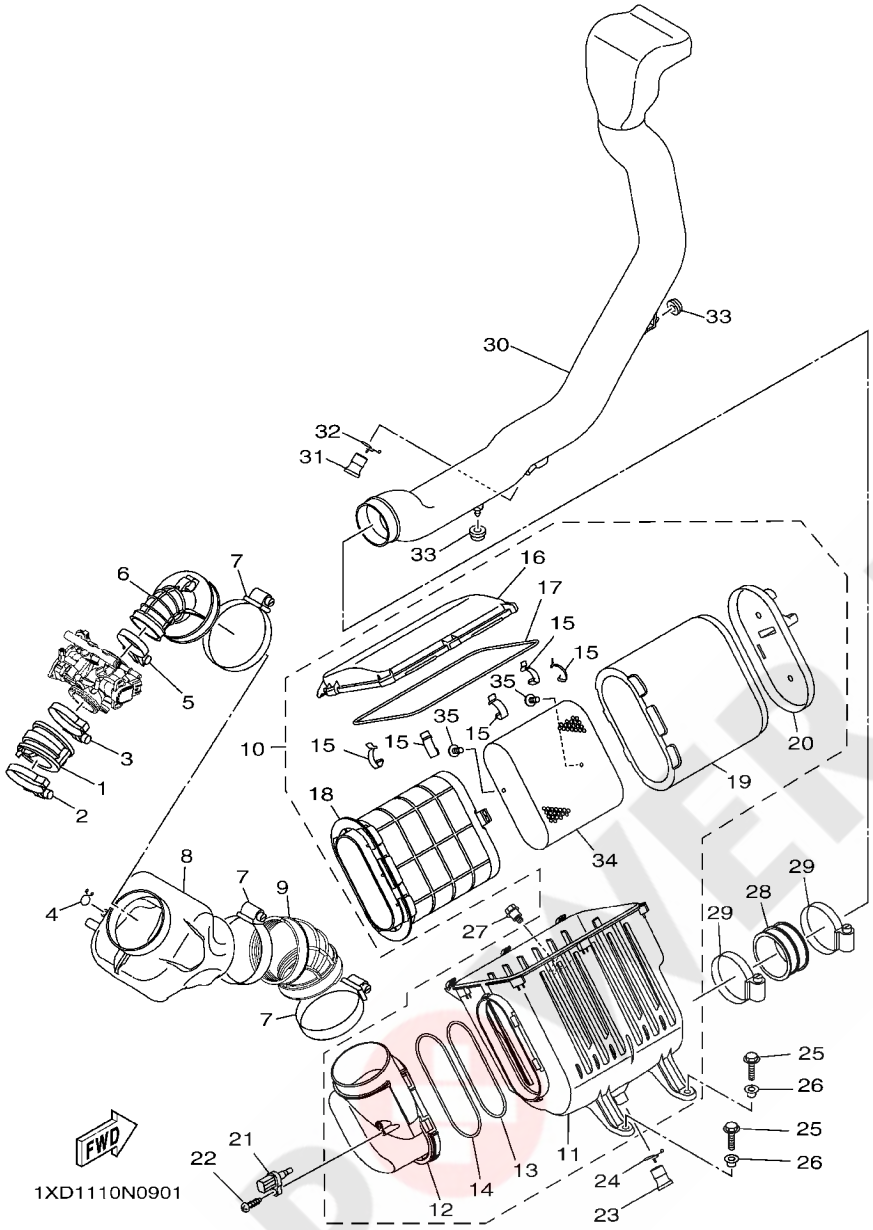

FIG. 9 INTAKE

REF. NO.	PART NO.	DESCRIPTION	EUR					REMARKS
28	1XD–E4476–00	SEAL	1					
29	90450–94001	HOSE CLAMP ASSY	2					
30	1XD–E443A–00	DUCT	1					
31	59V–14457–00	SEAL	1					
32	90467–220A1	CLIP	1					
33	90480–13567	GROMMET	2					
34	1XD–E441B–00	.NET 2	1					
35	1XD–E4429–00	.SCREW	2					

POWER PARTS By 4xQUAD

FIG. 10 THROTTLE BODY ASSY 1

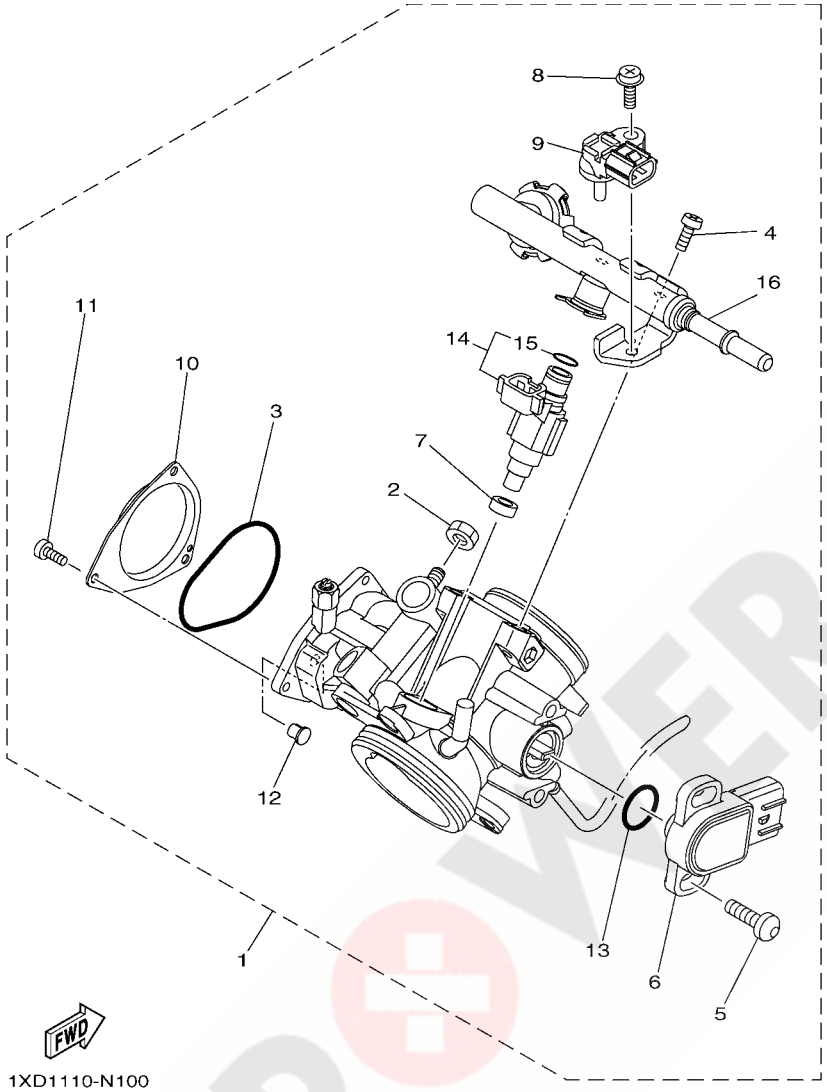

REF. NO.	PART NO.	DESCRIPTION	EUR					REMARKS
1	1XD–13750–00	THROTTLE BODY ASSY	1					
2	1S3–14161–00	.NUT, CABLE ADJUSTING	1					
3	5LP–14147–00	.O-RING	1					
4	92502–06012	.SCREW, PAN HEAD	2					
5	8CC–14216–10	.SCREW	2					
6	3B4–85885–00	.THROTTLE SENSOR ASSY	1					
7	8FP–13556–00	.RUBBER, INJECTOR	1					
8	2C0–14216–00	.SCREW	1					
9	5S7–82380–00	.SENSOR, PRESSURE	1					
10	5UG–14293–00	.COVER 1	1					
11	98502–04006	.SCREW, PAN HEAD	3					
12	1UY–14155–00	.GUIDE, CABLE	1					
13	5YP–14562–00	.O-RING	1					
14	1XD–13761–00	.INJECTOR	1					
15	1XD–14147–00	..O-RING	1					
16	1XD–13160–00	.DELIVERY PIPE ASSY 1	1					

POWER PARTS BY SQUAD

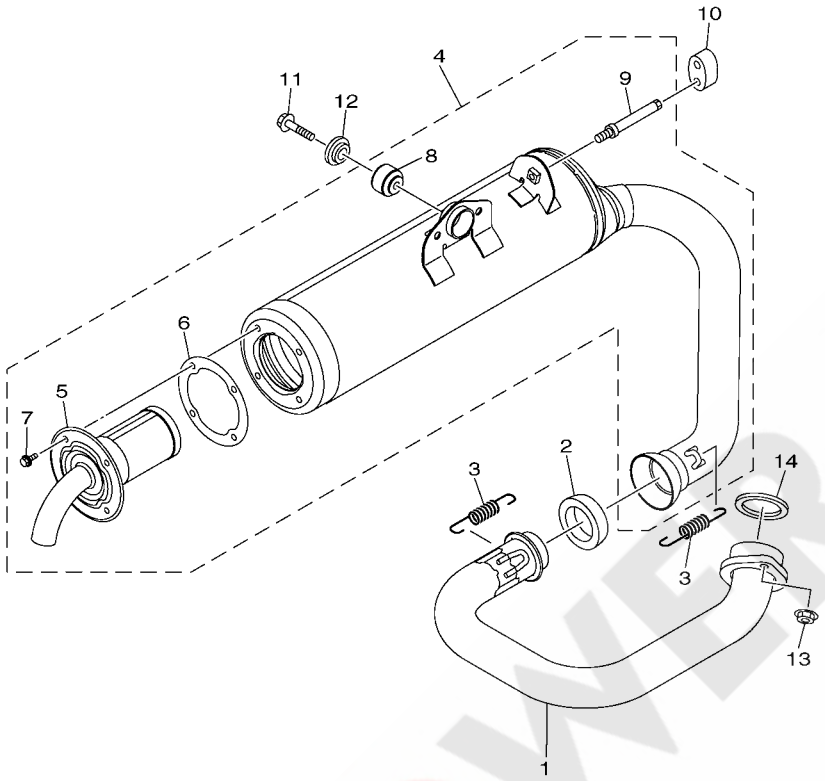

1XD1110-N110

FIG. 11 EXHAUST

REF. NO.	PART NO.	DESCRIPTION	EUR					REMARKS
1	1XD–E4611–00	PIPE, EXHAUST 1	1					
2	1XD–E4714–00	GASKET, MUFFLER	1					
3	90506–26012	SPRING, TENSION	2					
4	1XD–E4710–00	MUFFLER ASSY 1	1					
5	2BG–E4780–00	.SPARK ARRESTER ASSY	1					
6	2BG–E4755–00	.GASKET, SILENCER	1					
7	95022–06012	.BOLT, FLANGE	4					
8	1HP–F7414–00	.DAMPER, FOOTREST	1					
9	1XD–E4745–00	.SHAFT	1					
10	1XD–14737–00	DAMPER, MUFFLER	1					
11	95812–08040	BOLT, FLANGE	1					
12	3B4–14759–01	WASHER	1					
13	95702–08500	NUT, FLANGE	2					
14	3EG–14613–00	GASKET, EXHAUST PIPE	1					

POWER PARTS By 4QUAD

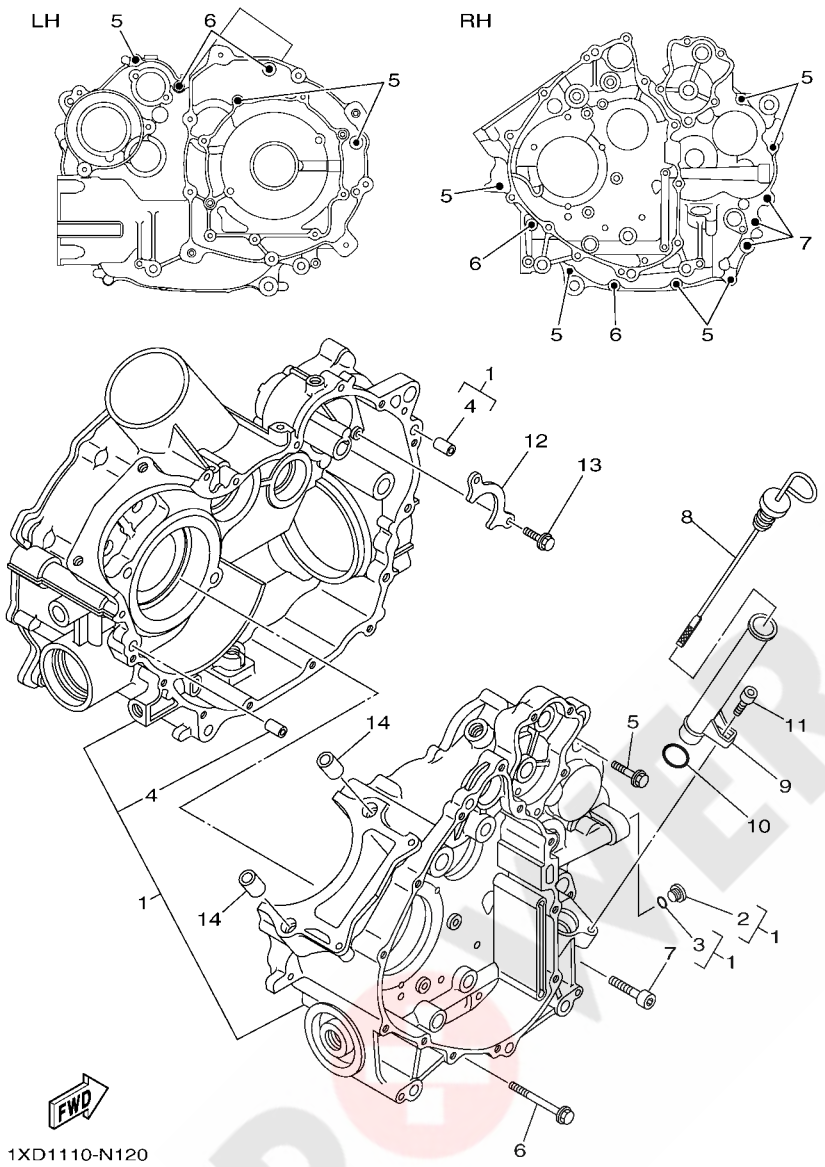

FIG. 12 CRANKCASE

REF. NO.	PART NO.	DESCRIPTION	EUR					REMARKS
1	3B4–15100–29	CRANKCASE ASSY	1					
2	36Y–15189–00	.PLUG	1					
3	93210–16325	.O-RING	1					
4	99530–10116	.PIN, DOWEL	2					
5	95022–06030	BOLT, FLANGE	9					
6	95022–06060	BOLT, FLANGE	4					
7	91312–08040	BOLT	3					
8	5B4–15362–00	PLUG, OIL LEVEL	1					
9	5B4–15112–00	PIPE, OIL	1					
10	93210–21631	O-RING	1					
11	91312–06012	BOLT	1					
12	3B4–15388–00	PLATE, BEARING COVER	1					
13	90105–06082	BOLT, FLANGE	2					
14	99530–14016	PIN, DOWEL	2					

POWER PARTS By 4xQUAD

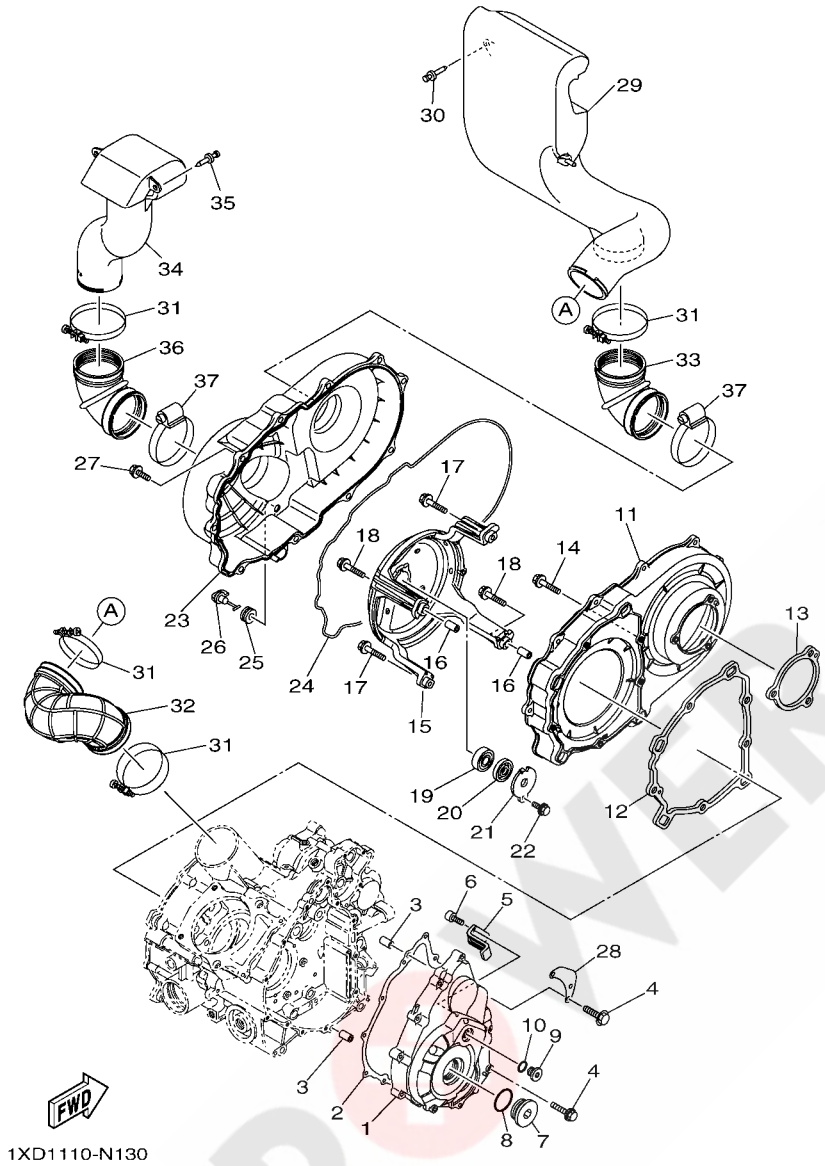

FIG. 13 CRANKCASE COVER 1

REF. NO.	PART NO.	DESCRIPTION	EUR					REMARKS
1	3B4–15411–10	COVER, CRANKCASE 1	1					
2	3B4–15451–00	GASKET, CRANKCASE COVER 1	1					
3	99530–10116	PIN, DOWEL	2					
4	95022–06030	BOLT, FLANGE	11					
5	3B4–15113–00	PLATE	1					
6	91312–05014	BOLT	2					
7	90340–36004	PLUG, STRAIGHT SCREW	1					
8	93210–357A3	O-RING	1					
9	90340–14016	PLUG, STRAIGHT SCREW	1					
10	93210–14369	O-RING	1					
11	1XD–15421–00	COVER, CRANKCASE 2	1					
12	3B4–15453–00	GASKET	1					
13	3B4–15315–00	SEAL, CRANKCASE	1					
14	95822–06030	BOLT, FLANGE	8					
15	1XD–15442–00	HOUSING, BEARING	1					
16	99530–10116	PIN, DOWEL	2					
17	95822–06030	BOLT, FLANGE	2					
18	95822–06040	BOLT, FLANGE	2					
19	93306–20103	BEARING	1					
20	93101–12168	OIL SEAL	1					
21	4WV–15381–00	PLATE, BEARING COVER	1					
22	95022–06016	BOLT, FLANGE	1					
23	1XD–15431–00	COVER, CRANKCASE 3	1					
24	3B4–15379–00	SEAL, CRANKCASE	1					
25	90480–13018	GROMMET	1					
26	5KM–15351–00	PLUG, DRAIN	1					
27	95822–06020	BOLT, FLANGE	11					

POWER PARTS By ATVQUAD

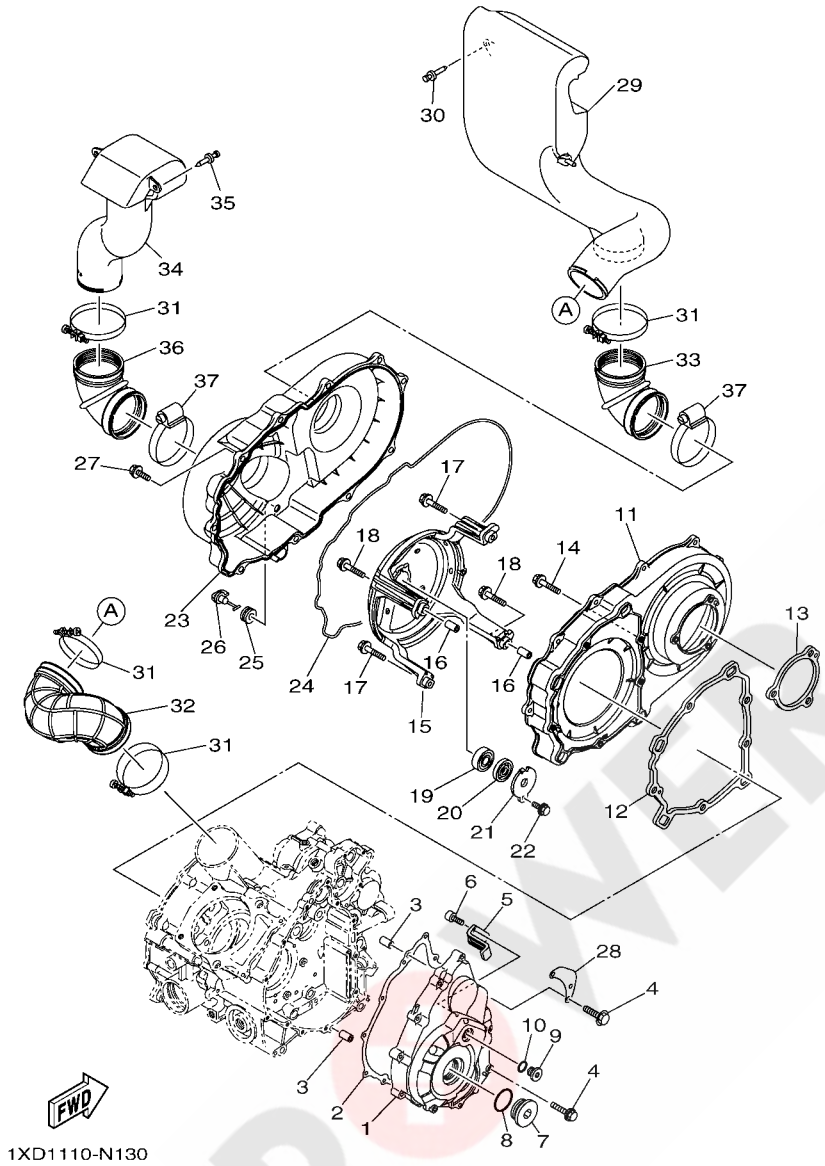

FIG. 13 CRANKCASE COVER 1

REF. NO.	PART NO.	DESCRIPTION	EUR					REMARKS
28	1XD–1541A–00	STAY, CRANKCASE COVER 1	1					
29	1XD–E5477–00	DUCT, AIR	1					
30	90269–07803	RIVET	1					
31	90460–85135	CLAMP, HOSE	4					
32	1XD–E5474–00	SEAL, AIR DUCT	1					
33	1XD–E5472–00	SEAL, AIR DUCT	1					
34	1XD–E5473–00	DUCT, AIR	1					
35	90269–07803	RIVET	2					
36	1XD–E5472–00	SEAL, AIR DUCT	1					
37	90450–94001	HOSE CLAMP ASSY	2					

POWER PARTS By axQUAD

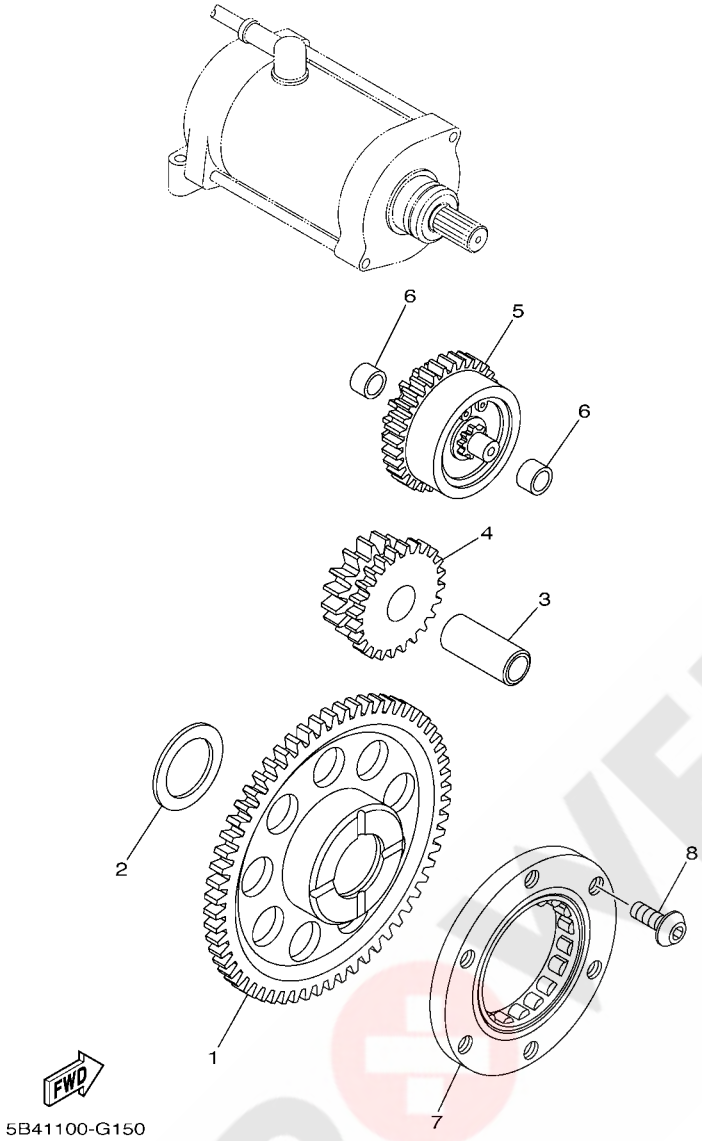

FIG. 14 STARTER CLUTCH

REF. NO.	PART NO.	DESCRIPTION	EUR					REMARKS
1	1HP–15515–00	GEAR 3 (49T)	1					
2	90201–286K9	WASHER, PLATE (T1.0)	1					
3	3B4–15522–00	SHAFT 2	1					
4	3B4–15517–01	GEAR, IDLER 2 (25T/15T)	1					
5	1PE–15560–00	DAMPER ASSY	1					
6	90380–10002	BUSH, SOLID	2					
7	5KM–15590–00	STARTER ONE-WAY ASSY	1					
8	90149–08049	SCREW	3					

POWER PARTS By 4QUAD

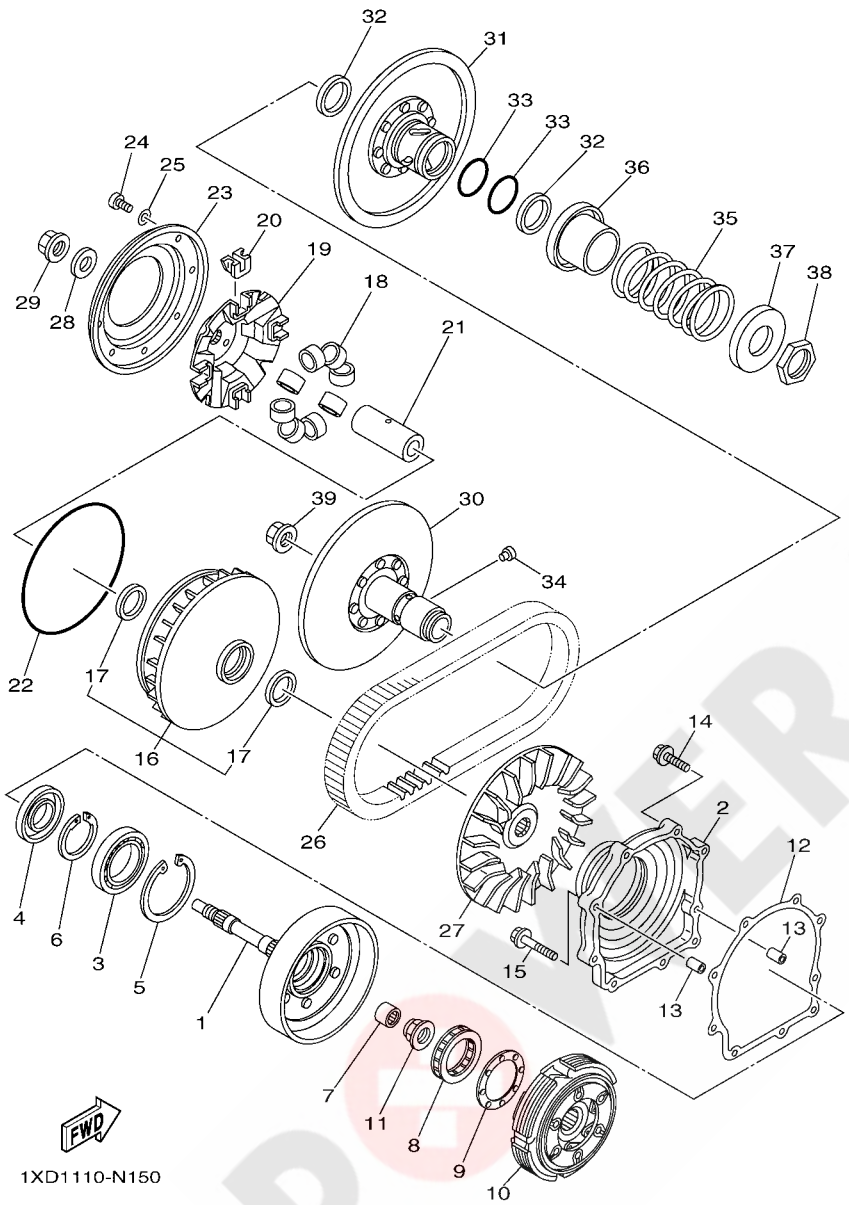

FIG. 15 CLUTCH

REF. NO.	PART NO.	DESCRIPTION	EUR					REMARKS
1	1XD–16611–00	CLUTCH HOUSING COMP.	1					
2	3B4–15163–00	HOUSING, BEARING 1	1					
3	93316–01003	BEARING	1					
4	93102–35004	OIL SEAL	1					
5	99009–80500	CIRCLIP	1					
6	93410–46079	CIRCLIP	1					
7	93315–21813	BEARING	1					
8	4SH–16664–00	BEARING, ONE WAY	1					
9	1HP–16717–00	RING, SEAL	1					
10	3B4–16620–00	CLUTCH CARRIER ASSY	1					
11	90179–22021	NUT	1					
12	3B4–15463–00	GASKET, COVER PINION 2	1					
13	99530–10116	PIN, DOWEL	2					
14	95022–06030	BOLT, FLANGE	7					
15	95022–06040	BOLT, FLANGE	2					
16	1XD–17606–00	PRIMARY SLIDING SHEAVE COMP.	1					
17	93101–35001	.OIL SEAL	2					
18	3B4–17632–01	WEIGHT	8					
19	3B4–17623–02	CAM	1					
20	16B–17653–00	SLIDER	4					
21	1XD–17645–00	COLLAR	1					
22	93211–59001	O-RING	1					
23	4WV–17639–10	STOPPER	1					
24	90157–04006	SCREW, PAN HEAD	8					
25	90201–047R9	WASHER, PLATE	8					(M4 WASHER)
26	1XD–17641–00	V-BELT	1					
27	3B4–17611–00	SHEAVE, PRIMARY FIXED	1					

POWER PARTS By 4xQUAD

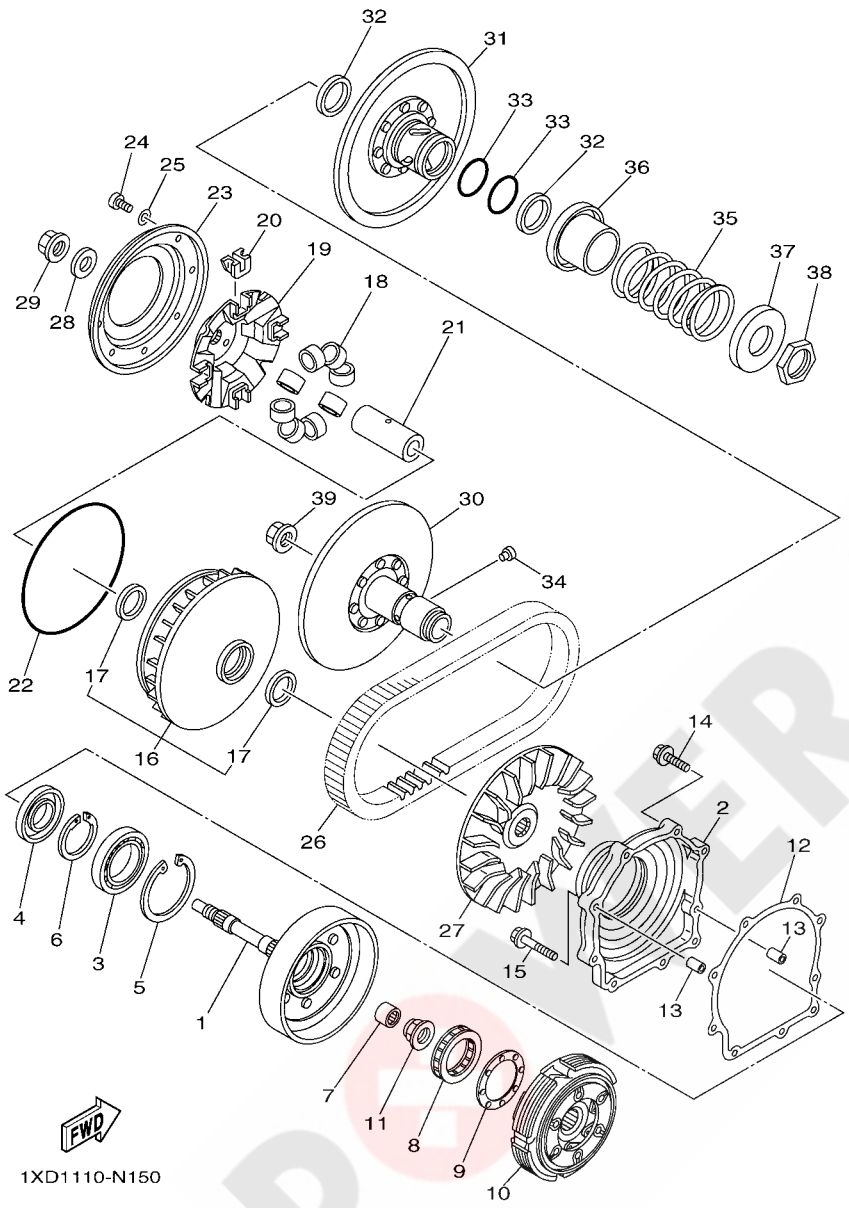

FIG. 15 CLUTCH

REF. NO.	PART NO.	DESCRIPTION	EUR					REMARKS
28	90201–190T7	WASHER, PLATE	1					
29	90179–16005	NUT	1					
30	1XD–17660–00	SECONDARY FIXED SHEAVE COMP.	1					
31	3B4–17670–10	SECONDARY SLIDING SHEAVE	1					
32	93104–41119	OIL SEAL	2					
33	93210–44545	O-RING	2					
34	4CW–17664–00	PIN, GUIDE	4					
35	90501–650A0	SPRING, COMPRESSION	1					
36	4WV–17684–00	SEAT, SECONDARY SPRING	1					
37	4WV–17644–00	SEAT,SPRING	1					
38	90170–36279	NUT	1					
39	90179–16005	NUT	1					

POWER PARTS By axoUW

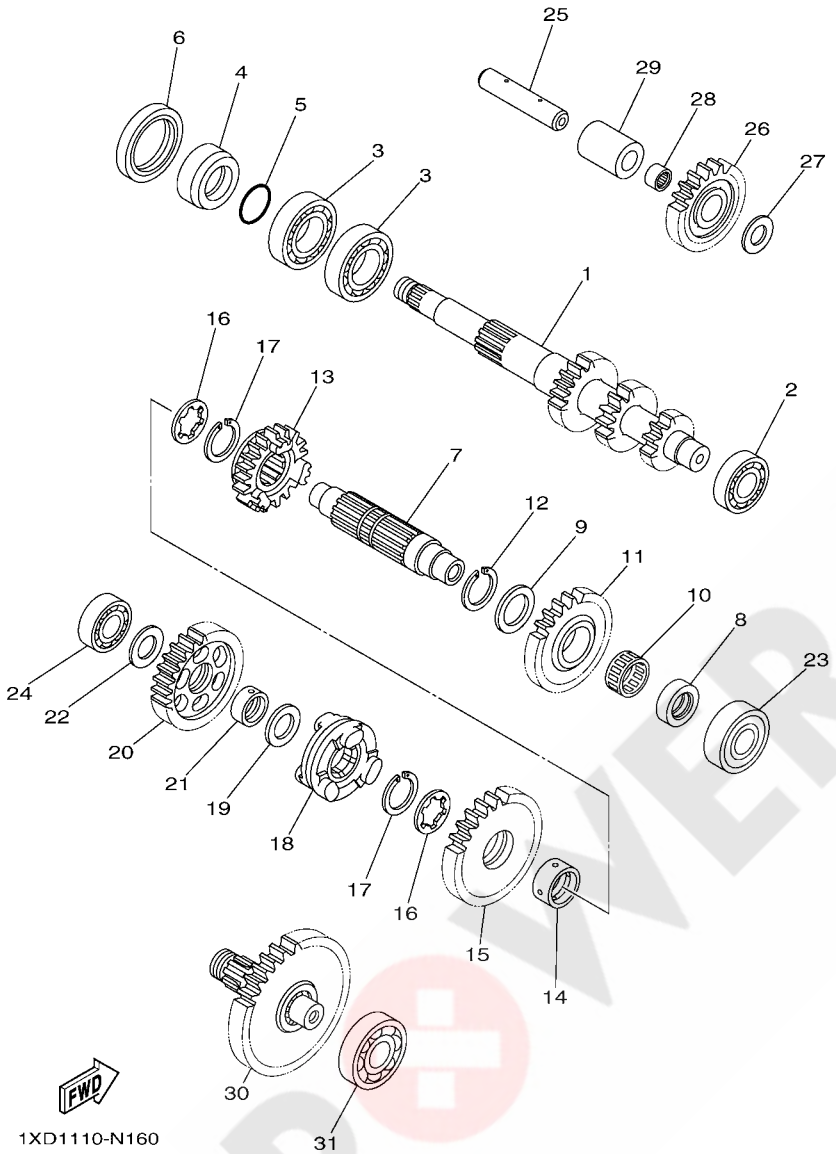

FIG. 16 TRANSMISSION

REF. NO.	PART NO.	DESCRIPTION	EUR					REMARKS
1	1XD–17681–00	SHAFT, SECONDARY	1					
2	93306–00401	BEARING	1					
3	93306–07801	BEARING	2					
4	90387–26001	COLLAR	1					
5	93210–26001	O-RING	1					
6	93102–42004	OIL SEAL	1					
7	3B4–17421–00	AXLE, DRIVE	1					
8	90387–22032	COLLAR	1					
9	90201–25290	WASHER, PLATE	1					
10	93310–32590	BEARING	1					
11	3B4–17253–00	GEAR, REVERSE WHEEL 2 (28T)	1					
12	93440–25084	CIRCLIP	1					
13	3B4–17582–00	GEAR, MIDDLE DRIVE (21T)	1					
14	90387–250R3	COLLAR	1					
15	3B4–17233–00	GEAR, LOW WHEEL (31T)	1					
16	90214–22007	WASHER, CLAW	2					
17	93440–25084	CIRCLIP	2					
18	5B4–17285–00	CLUTCH, DOG	1					
19	90201–20028	WASHER, PLATE	1					
20	1XD–17223–00	GEAR, HIGH WHEEL (30T)	1					
21	90387–20021	COLLAR	1					
22	90201–170U8	WASHER, PLATE	1					
23	93306–20483	BEARING	1					
24	93306–20309	BEARING	1					
25	3B4–17432–01	AXLE, IDLE	1					
26	16B–17243–00	GEAR, REVERSE WHEEL 1(23T)	1					
27	90201–15029	WASHER, PLATE	1					

POWER PARTS By ATVQUAD

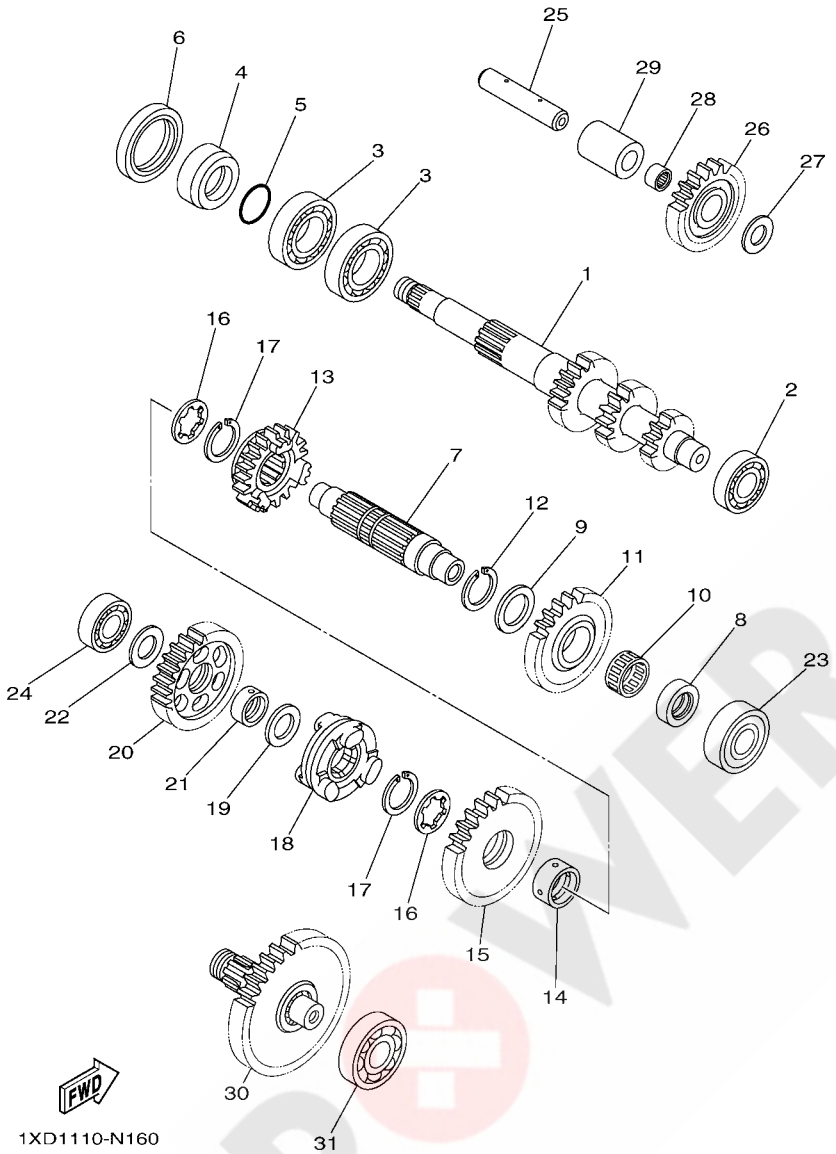

FIG. 16 TRANSMISSION

REF. NO.	PART NO.	DESCRIPTION	EUR					REMARKS
28	93310–31576	BEARING	1					
29	90387–15018	COLLAR	1					
30	3B4–17520–00	DRIVE PINION ASSY (41T)	1					
31	93306–30438	BEARING	1					

POWER PARTS By 4xQUAD

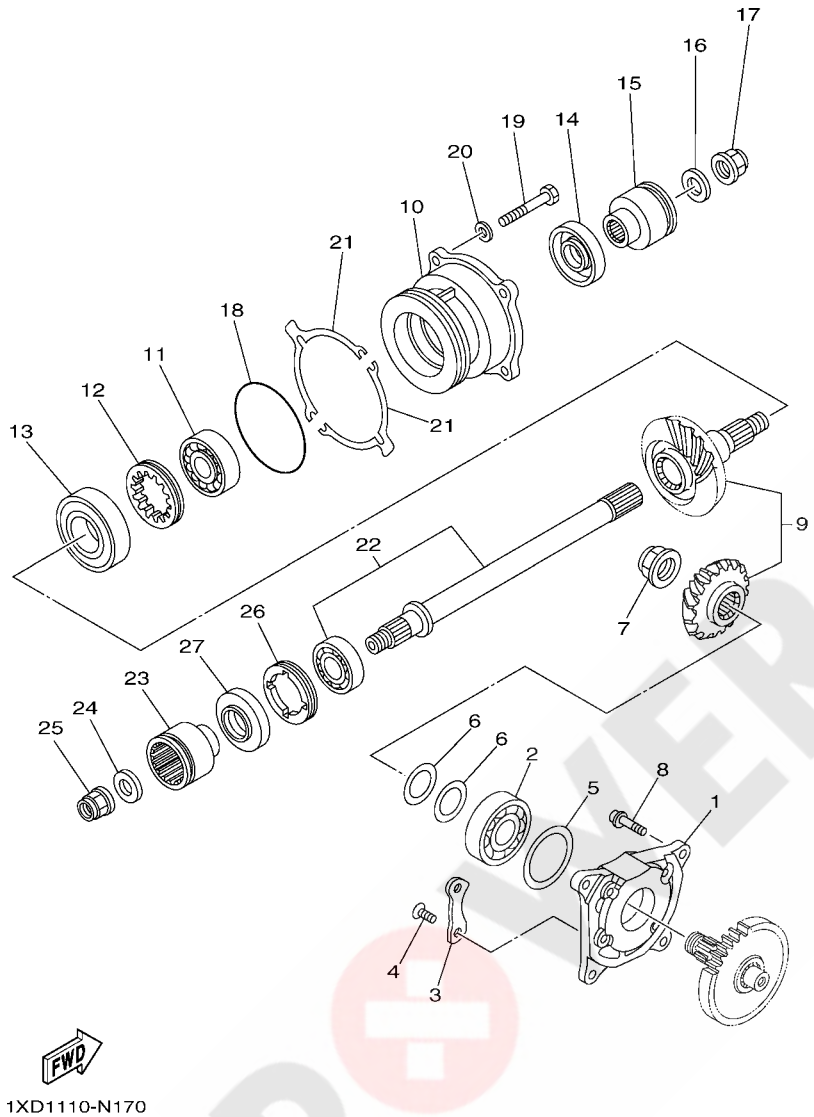

FIG. 17 MIDDLE DRIVE GEAR

REF. NO.	PART NO.	DESCRIPTION	EUR					REMARKS
1	5B4–17521–00	HOUSING, BEARING	1					
2	93306–30584	BEARING	1					
3	11H–15383–02	PLATE, BEARING COVER	2					
4	90149–08013	SCREW	4					
5	90201–46M28	WASHER, PLATE	1					
6	5KM–17531–50	SHIM, PINION (0.5T)	2					UR
	5KM–17531–60	SHIM, PINION (0.55T)	2					UR
	5KM–17531–70	SHIM, PINION (0.6T)	2					UR
	5KM–17531–80	SHIM, PINION (0.7T)	2					UR
	5KM–17531–90	SHIM, PINION (0.8T)	2					UR
	5KM–17531–A0	SHIM, PINION (0.9T)	2					UR
	5KM–17531–B0	SHIM, PINION (1.0T)	2					UR
7	90179–22013	NUT	1					
8	90110–08091	BOLT, HEXAGON SOCKET HEAD	4					
9	1XD–17530–00	PINION SET	1					
10	3B4–17551–00	HOUSING, BEARING	1					
11	93306–37206	BEARING	1					
12	90179–60001	NUT	1					
13	93306–20654	BEARING	1					
14	93102–30010	OIL SEAL	1					
15	3B4–17832–10	COUPLING	1					
16	90201–166R5	WASHER, PLATE	1					
17	90179–16006	NUT	1					
18	93210–78544	O-RING	1					
19	97022–08030	BOLT, HEXAGON	4					
20	92902–08600	WASHER, PLATE	4					
21	3B4–17531–00	SHIM, PINION (0.1T)	2					UR

POWER PARTS By KOUAD

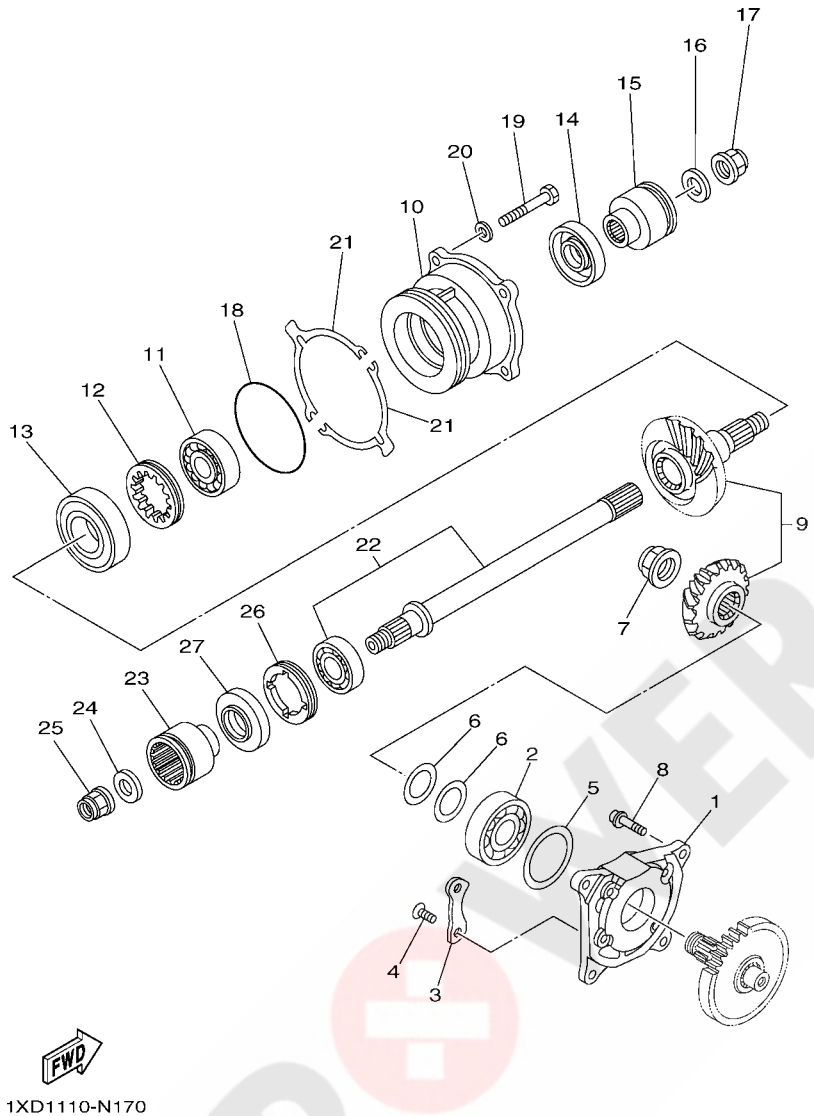

FIG. 17 MIDDLE DRIVE GEAR

REF. NO.	PART NO.	DESCRIPTION	EUR					REMARKS
21	3B4–17531–10	SHIM, PINION (0.15T)	2					UR
	3B4–17531–20	SHIM, PINION (0.2T)	2					UR
	3B4–17531–30	SHIM, PINION (0.3T)	2					UR
	3B4–17531–40	SHIM, PINION (0.4T)	2					UR
	3B4–17531–50	SHIM, PINION (0.5T)	2					UR
	3B4–17531–60	SHIM, PINION (0.6T)	2					UR
22	1XD–1755A–00	MIDDLE DRIVEN SHAFT ASSY	1					
23	3B4–17832–10	COUPLING	1					
24	90201–166R5	WASHER, PLATE	1					
25	90179–16006	NUT	1					
26	90179–55660	NUT	1					
27	93102–30010	OIL SEAL	1					

POWER PARTS By ATQUAD

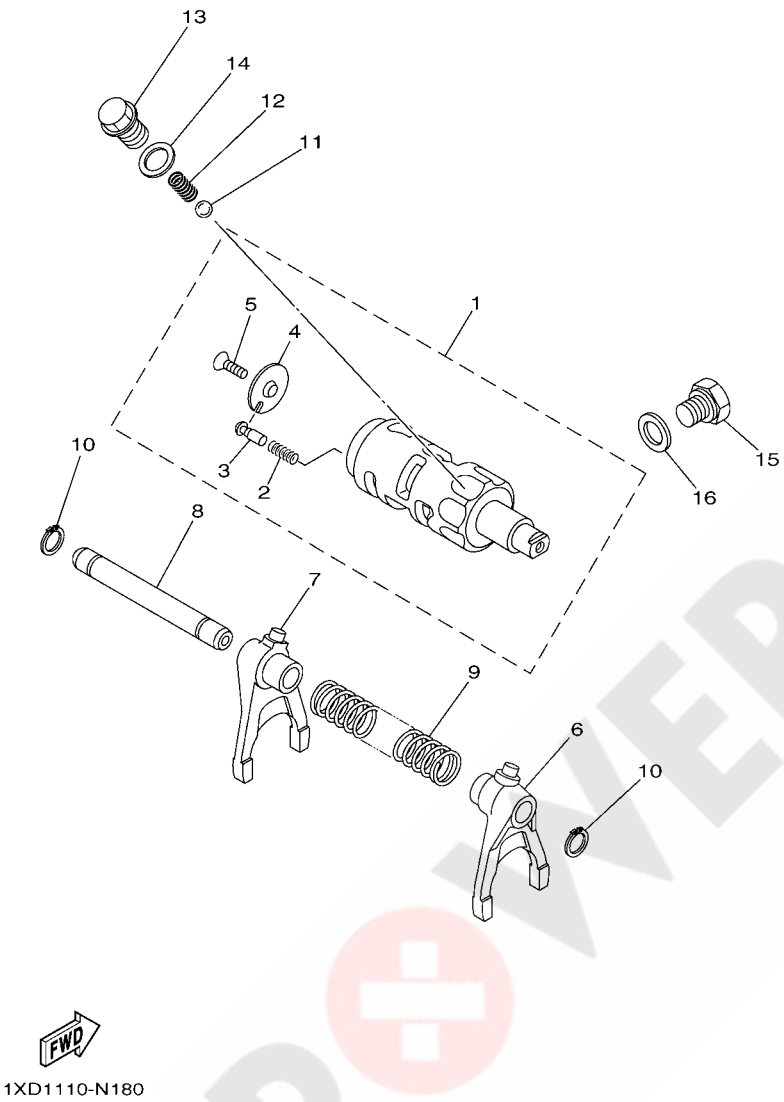

FIG. 18 SHIFT CAM & FORK

REF. NO.	PART NO.	DESCRIPTION	EUR					REMARKS
1	1XD–18540–00	SHIFT CAM ASSY	1					
2	90501–06022	.SPRING, COMPRESSION	1					
3	5KM–18542–00	.POINT, NEUTRAL	1					
4	4UN–18566–00	.PLATE, SIDE 2	1					
5	90149–05016	.SCREW	1					
6	3B4–18511–11	FORK, SHIFT 1	1					
7	1XD–18512–00	FORK, SHIFT 2	1					
8	5B4–18531–00	BAR, SHIFT FORK GUIDE 1	1					
9	90501–140A2	SPRING, COMPRESSION	1					
10	99009–12400	CIRCLIP	2					
11	93503–08007	BALL	1					
12	90501–100A8	SPRING, COMPRESSION	1					
13	90105–14003	BOLT, FLANGE	1					
14	90430–14194	GASKET	1					
15	90340–14036	PLUG, STRAIGHT SCREW	1					
16	90430–14194	GASKET	1					

POWER PARTS By ATQUAD

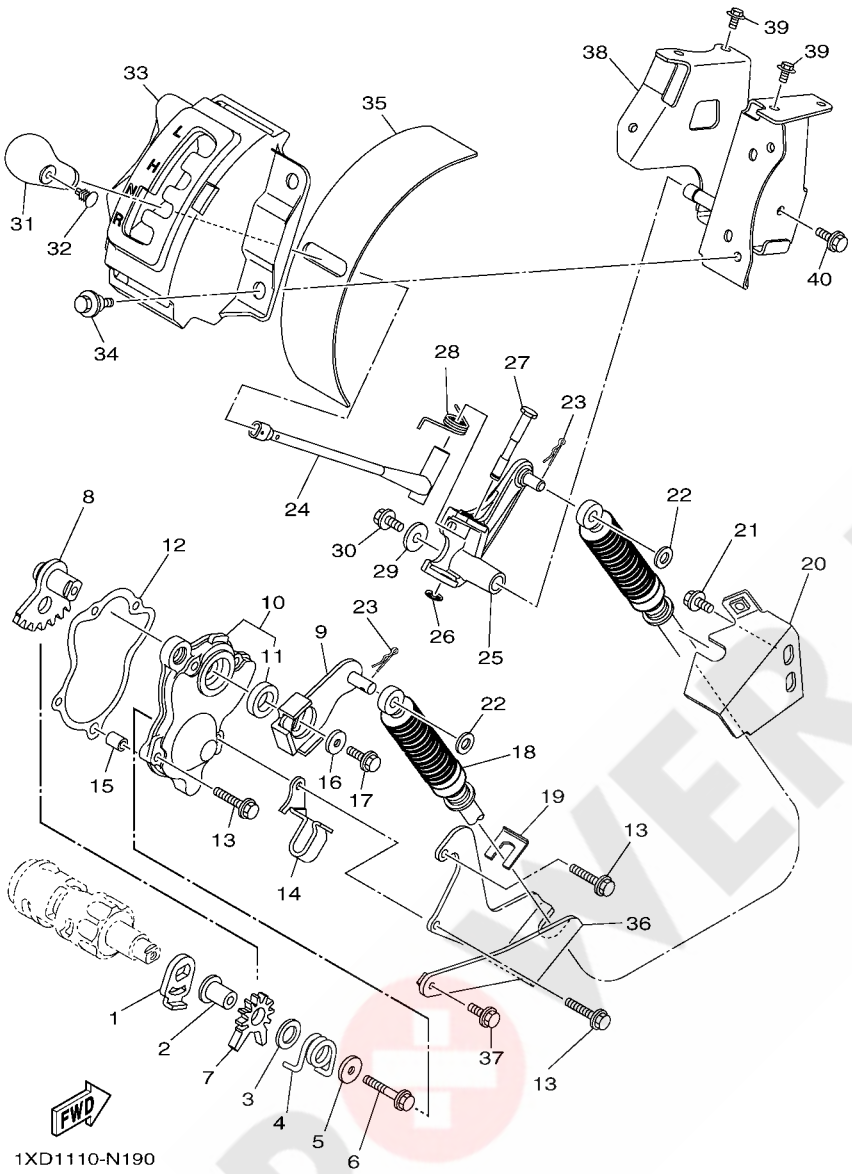

FIG. 19 SHIFT SHAFT

REF. NO.	PART NO.	DESCRIPTION	EUR					REMARKS
1	1XD–18198–00	LEVER	1					
2	90387–0613B	COLLAR	1					
3	90201–132G5	WASHER, PLATE	1					
4	90508–35764	SPRING, TORSION	1					
5	90201–06036	WASHER, PLATE	1					
6	95812–06035	BOLT, FLANGE	1					
7	5KM–18191–00	LEVER	1					
8	1HP–18103–00	SHIFT SHAFT COMP.	1					
9	1XD–18104–00	SHIFT GUIDE COMP.	1					
10	1HP–18380–00	SHIFTER BRKT. ASSY	1					
11	93102–17263	.OIL SEAL	1					
12	3B4–18146–00	GASKET	1					
13	95022–06025	BOLT, FLANGE	4					
14	90462–10048	CLAMP	1					
15	99530–08012	PIN, DOWEL	1					
16	90201–06036	WASHER, PLATE	1					
17	90105–06176	BOLT, FLANGE	1					
18	1XD–2637E–00	CABLE, CONTROL 1	1					
19	1XD–25866–00	CIRCLIP	1					
20	1XD–F6381–00	HOLDER, ADJUSTING	1					
21	95812–08014	BOLT, FLANGE	2					
22	92902–08600	WASHER, PLATE	2					
23	90468–16001	CLIP	2					
24	1XD–E8190–00	LEVER COMP. 1	1					
25	1XD–E8169–00	ARM, SHIFT 2	1					
26	99002–06600	CLIP	1					
27	1HP–E8125–00	SHAFT, SHIFT	1					

POWER PARTS By xQUAD

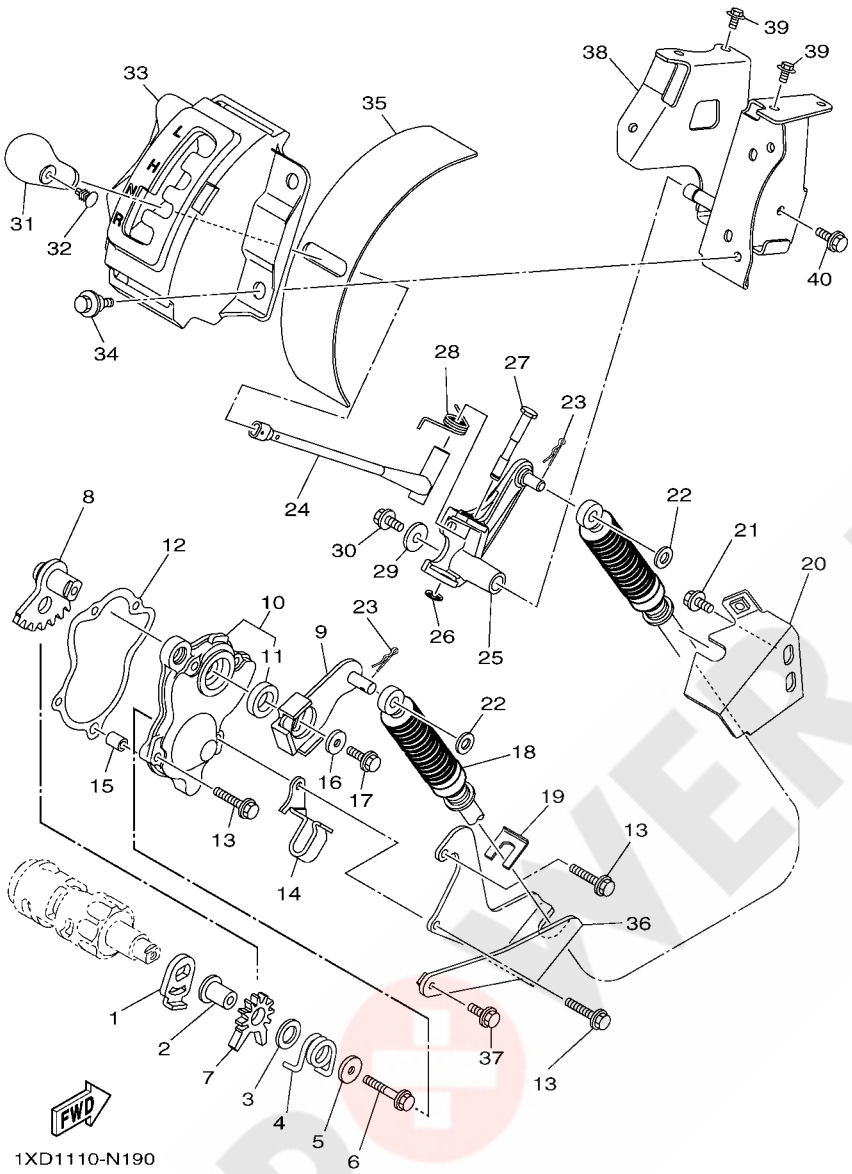

FIG. 19 SHIFT SHAFT

REF. NO.	PART NO.	DESCRIPTION	EUR					REMARKS
28	1HP–E8196–00	SPRING, RETURN	1					
29	90201–06036	WASHER, PLATE	1					
30	95812–06016	BOLT, FLANGE	1					
31	28P–18174–00	KNOB, SHIFT LEVER	1					
32	90269–05055	RIVET	1					
33	1XD–E8172–00	GUIDE, SHIFT	1					
34	90109–06172	BOLT	3					
35	1HP–E8154–00	COVER, DUST	1					
36	1XD–18431–00	BRACKET, SHIFTER	1					
37	95022–06012	BOLT, FLANGE	1					
38	1XD–E811A–00	PLATE, SHIFT ARM	1					
39	95812–06012	BOLT, FLANGE	4					
40	90105–06831	BOLT, FLANGE	1					

POWER PARTS By 4x4QUAD

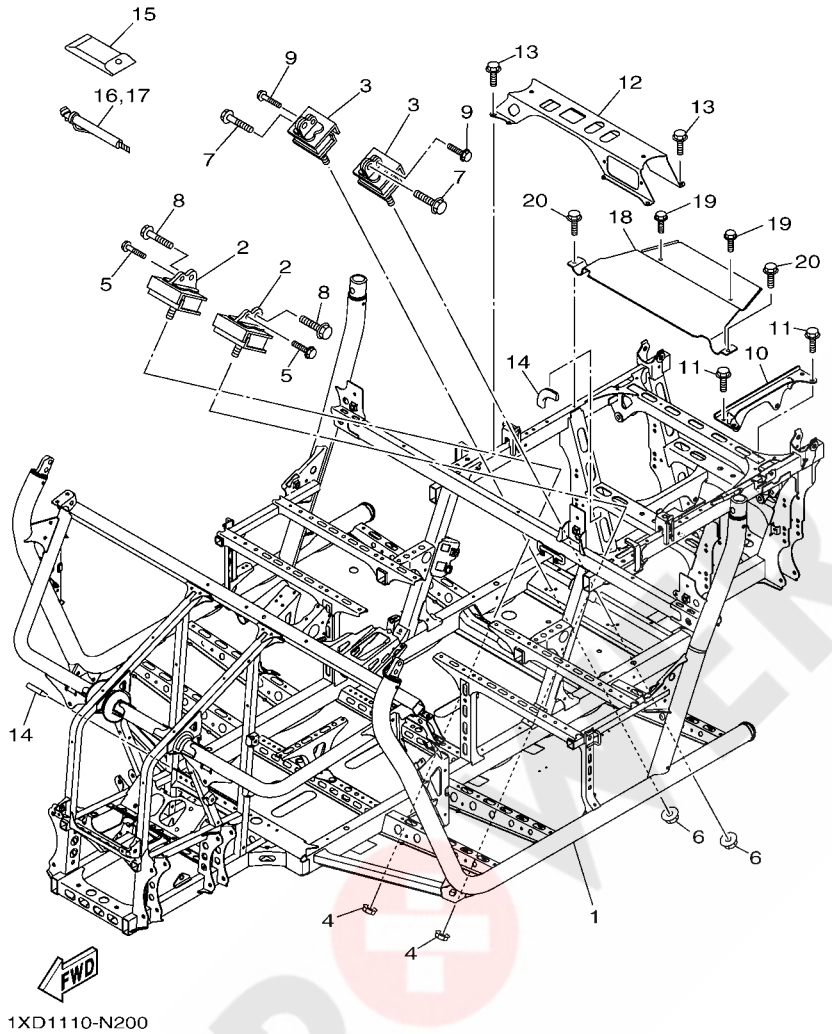

FIG. 20 FRAME

REF. NO.	PART NO.	DESCRIPTION	EUR					REMARKS
1	1XD–F1110–00	FRAME COMP.	1					
2	5B4–21485–00	DAMPER, RUBBER 1	2					
3	5B4–21485–00	DAMPER, RUBBER 1	2					
4	90185–10011	NUT, SELF-LOCKING	2					
5	90105–06639	BOLT, FLANGE	2					
6	90185–10011	NUT, SELF-LOCKING	2					
7	95812–10035	BOLT, FLANGE	2					
8	90105–10314	BOLT, FLANGE	2					
9	90105–06639	BOLT, FLANGE	2					
10	1XD–F831T–00	STAY, SUPPORT 1	1					
11	95812–08016	BOLT, FLANGE	4					
12	1XD–F834V–00	PROTECTOR 1	1					
13	90105–08867	BOLT, FLANGE	4					
14	4XY–28347–00	MOLE 3	2					
15	5B4–F8100–00	TOOL KIT	1					
16	5UG–F811A–00	GAUGE, AIR	1					
17	4XY–2811A–01	GAUGE, AIR	1					
18	1XD–F2898–00	INSULATOR, HEAT	1					
19	90105–06831	BOLT, FLANGE	2					
20	90105–08867	BOLT, FLANGE	2					

POWER PARTS By xQUAD

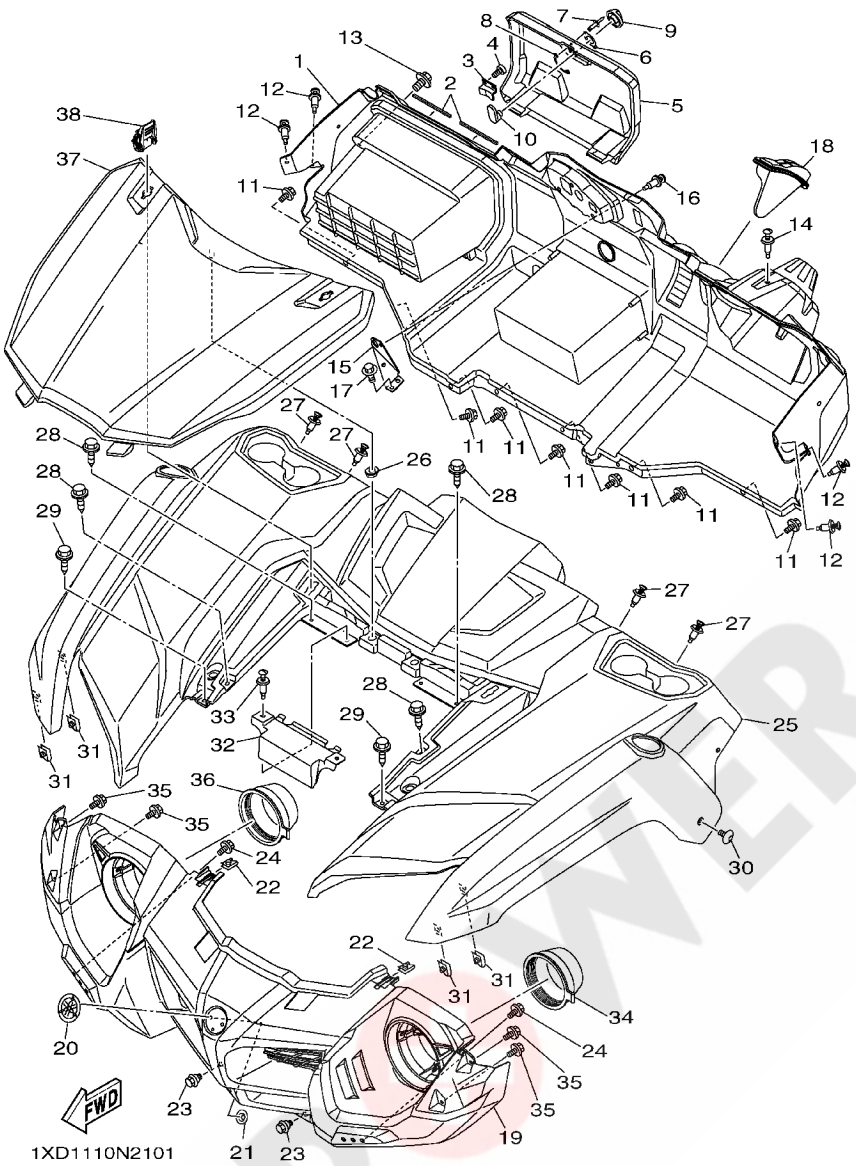

FIG. 21 FRONT FENDER

REF. NO.	PART NO.	DESCRIPTION	EUR					REMARKS
1	1XD–K7711–10	PANEL, INSTRUMENT	1					
2	1XD–F1541–00	DAMPER 1	2					
3	1XD–F139T–00	BRACKET, COVER	1					
4	90164–04800	SCREW, TAPPING	2					
5	1XD–F160F–00	LID	1					
6	1XD–F1515–00	WASHER, SPECIAL	1					
7	90267–24143	RIVET, BLIND	2					
8	1XD-F1516-00	WASHER, SPECIAL	1					
9	1XD–2837G–00	LOCK 1	1					
10	1XD–2837H–00	LOCK 2	1					
11	90119–06226	BOLT, WITH WASHER	7					
12	90269–07803	RIVET	4					
13	90119–06226	BOLT, WITH WASHER	1					
14	90269–07803	RIVET	1					
15	1XD–F258G–00	BRACKET, DASH UPPER 1	1					
16	90269–07803	RIVET	1					
17	95822–06012	BOLT, FLANGE	2					
18	1XD–F6372–00	COVER, HANDLE LEVER 1	1					
19	1XD–F8309–00	GRILLE, FRONT	1					
20	1XD–F175B–00	TUNING FORK MARK	1					
21	90183–06071	NUT, SPRING	2					
22	90183–060A6	NUT, SPRING	2					
23	90109–06202	BOLT	2					
24	90119–06215	BOLT, WITH WASHER	2					
25	1XD–F1511–20	FENDER, FRONT	1					UR FOR RTR
	1XD–F1511–00	FENDER, FRONT	1					UR FOR PDG
26	90480–01558	GROMMET	4					

POWER PARTS By 4xQUAD

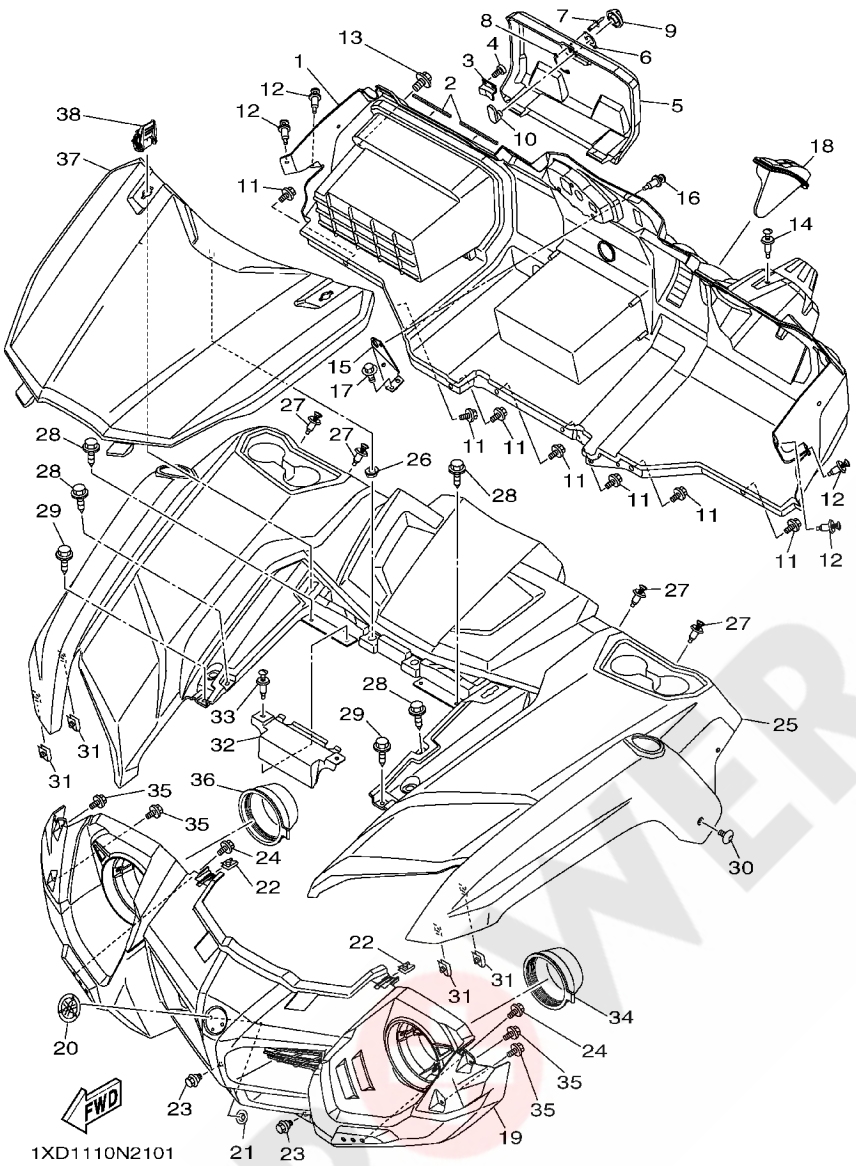

FIG. 21 FRONT FENDER

REF. NO.	PART NO.	DESCRIPTION	EUR					REMARKS
27	90269–07803	RIVET	8					
28	90119–06226	BOLT, WITH WASHER	4					
29	90119–06226	BOLT, WITH WASHER	2					
30	90149–06280	SCREW	2					
31	90183–060A6	NUT, SPRING	4					
32	1XD–F163A–00	COVER, REAR FENDER 1	1					
33	90269–07803	RIVET	2					
34	3B4–28349–00	CAP	1					
35	90119–06226	BOLT, WITH WASHER	4					
36	3B4–28349–00	CAP	1					
37	1XD–F1982–20	HOOD 1	1					UR FOR RTR
	1XD–F1982–00	HOOD 1	1					UR FOR PDG
38	1XD–2175K–00	LEVER, LOCK	2					

POWER PARTS By ATV QUAD

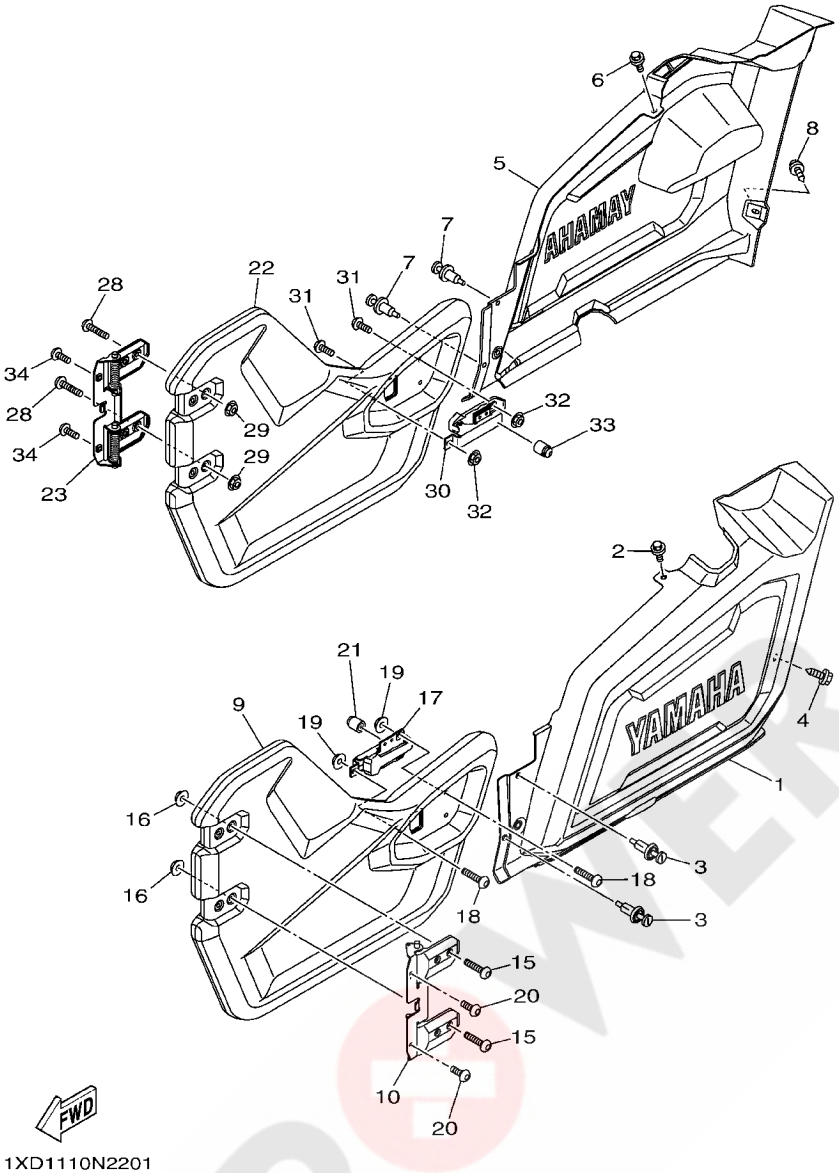

FIG. 22 SIDE COVER

REF. NO.	PART NO.	DESCRIPTION	EUR					REMARKS
1	1XD–F1721–00	COVER, SIDE 2	1					
2	90119–06226	BOLT, WITH WASHER	1					
3	90269–07803	RIVET	2					
4	90119–06226	BOLT, WITH WASHER	2					
5	1XD–F1731–00	COVER, SIDE 3	1					
6	90119–06226	BOLT, WITH WASHER	1					
7	90269–07803	RIVET	2					
8	90119–06226	BOLT, WITH WASHER	2					
9	1XD–K8557–00	PNL., DOOR FR. LH.	1					
10	1XD–F4772–00	HINGE ASSY	1					
15	90109–06897	BOLT	4					
16	95602–06200	NUT, SELF-LOCKING	4					
17	1XD–K7171–00	BODY, LATCH 1	1					
18	90111–06086	BOLT,HEX. SOCKET BUTTON	3					
19	95602–06200	NUT, SELF-LOCKING	3					
20	5B4–F1722–00	BOLT 2	2					
21	1XD–F8378–00	PAD	1					
22	1XD–K8557–00	PNL., DOOR FR. LH.	1					
23	1XD–F4772–00	HINGE ASSY	1					

POWER PARTS By 4xQUAD

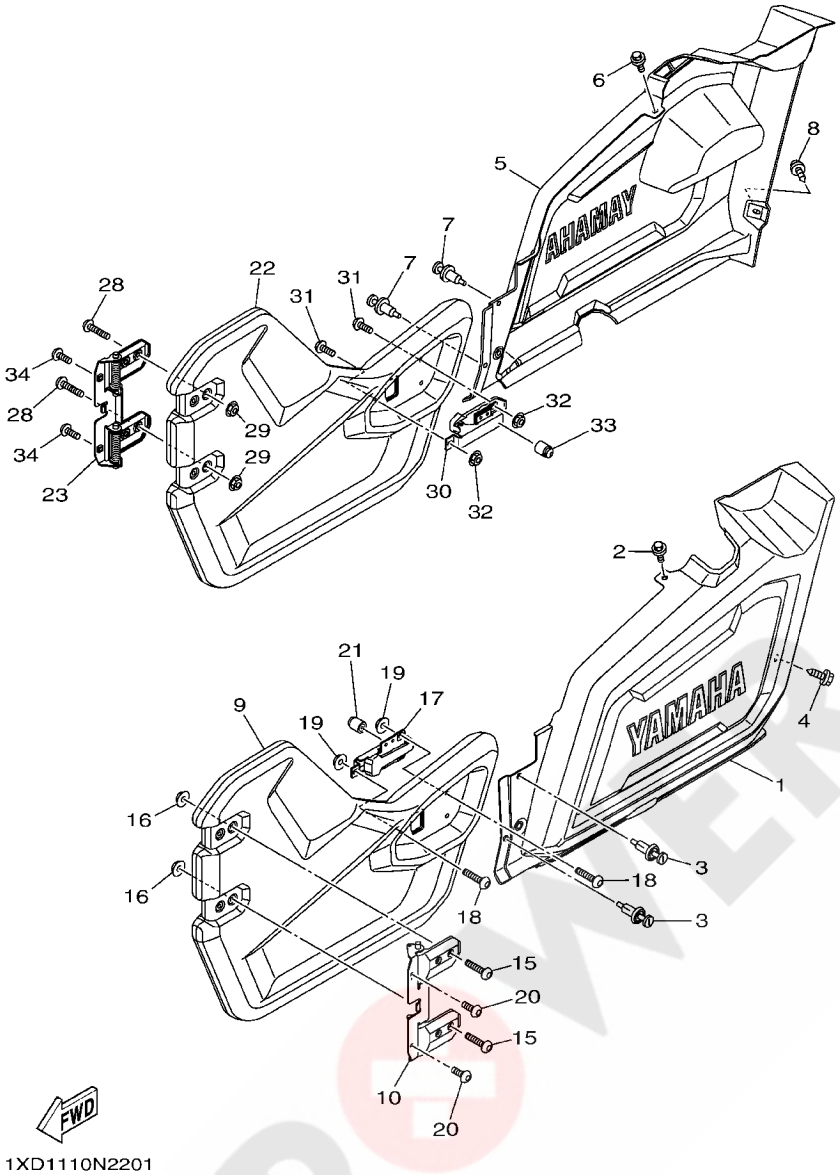

FIG. 22 SIDE COVER

REF. NO.	PART NO.	DESCRIPTION	EUR					REMARKS
28	90109–06897	BOLT	4					
29	95602–06200	NUT, SELF-LOCKING	4					
30	1XD–K7171–00	BODY, LATCH 1	1					
31	90111–06086	BOLT,HEX. SOCKET BUTTON	3					
32	95602–06200	NUT, SELF-LOCKING	3					
33	1XD–F8378–00	PAD	1					
34	5B4–F1722–00	BOLT 2	2					

POWER PARTS By 4xQUAD

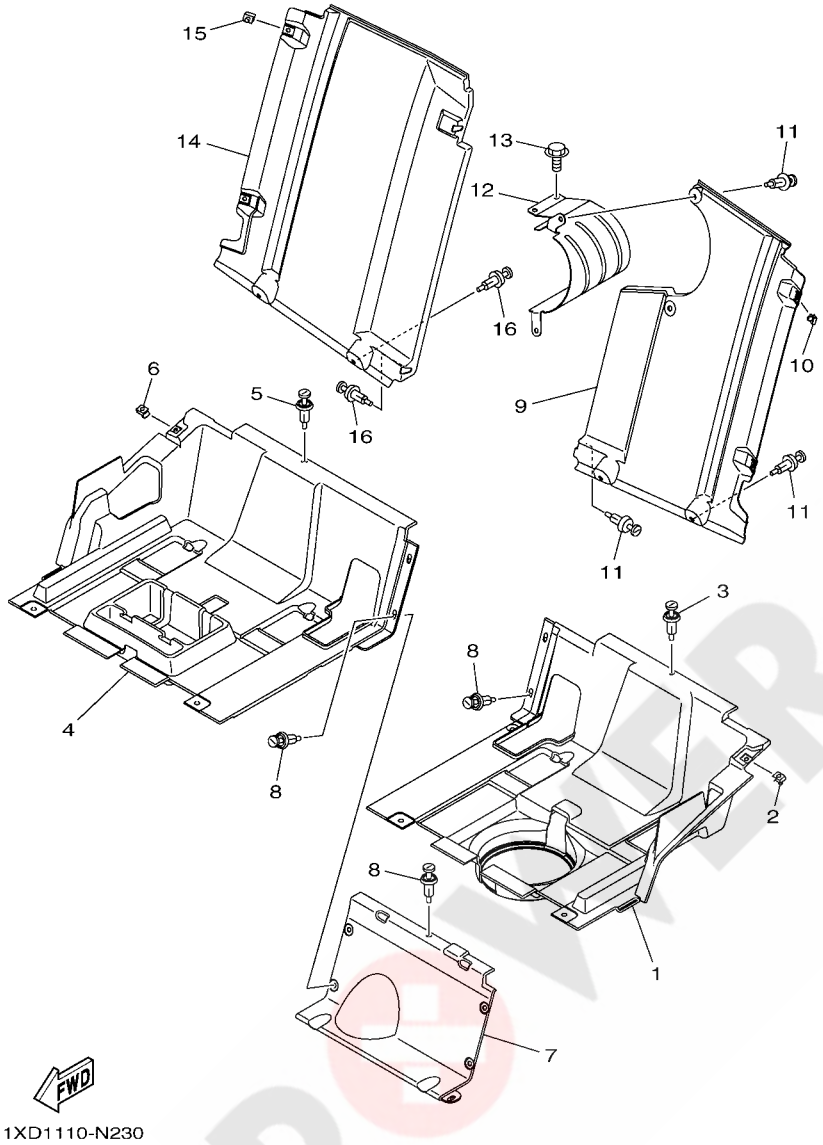

FIG. 23 SIDE COVER 2

REF. NO.	PART NO.	DESCRIPTION	EUR					REMARKS
1	1XD–F84A3–00	PLATE, UNDER 1	1					
2	90183–060A6	NUT, SPRING	1					
3	90269–07803	RIVET	2					
4	1XD–F84A4–00	PLATE, UNDER 2	1					
5	90269–07803	RIVET	1					
6	90183–060A6	NUT, SPRING	1					
7	1XD–F84A5–00	PLATE, UNDER 3	1					
8	90269–07803	RIVET	5					
9	1XD–F2327–00	MUD GUARD 1	1					
10	90183–060A6	NUT, SPRING	2					
11	90269–07803	RIVET	5					
12	1XD–F172A–00	PANEL 1	1					
13	90105–08867	BOLT, FLANGE	2					
14	1XD–F2328–00	MUD GUARD 2	1					
15	90183–060A6	NUT, SPRING	2					
16	90269–07803	RIVET	4					

POWER PARTS By ATXQUAD

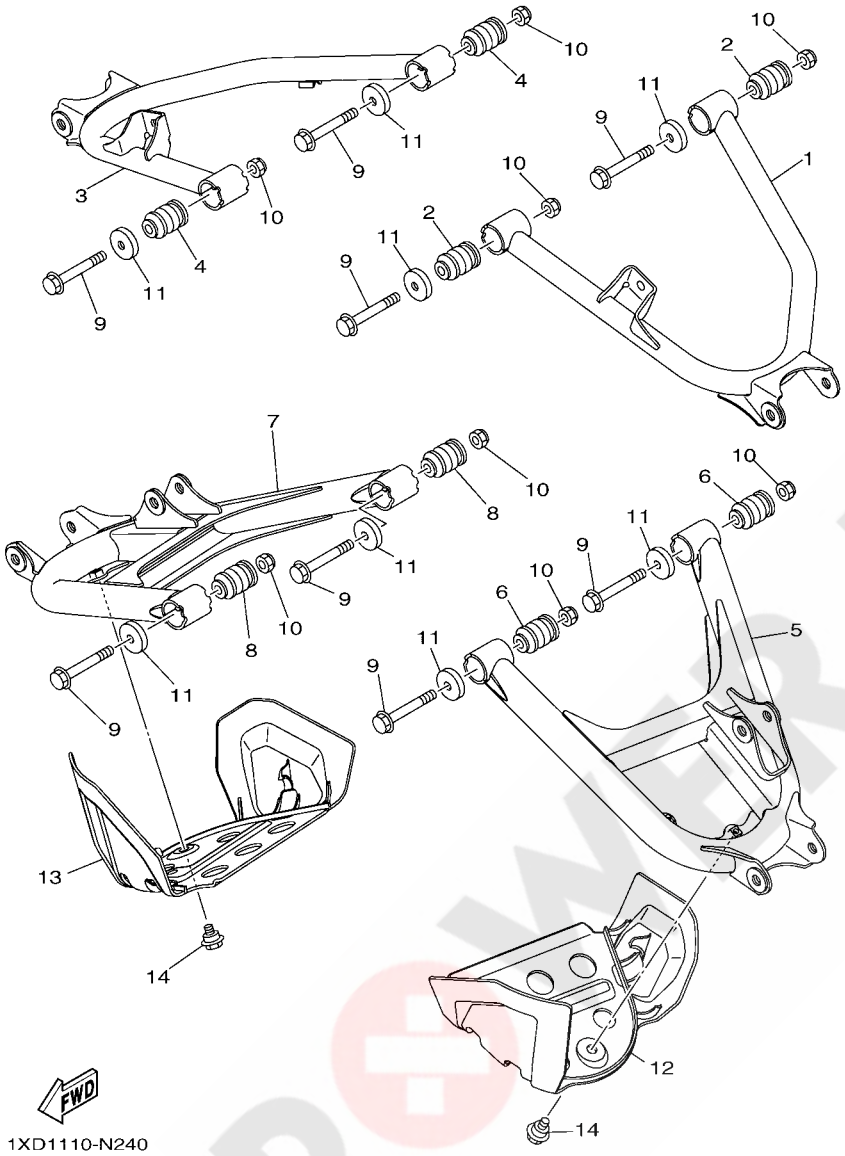

FIG. 24 REAR ARM

REF. NO.	PART NO.	DESCRIPTION	EUR					REMARKS
1	1XD–F2171–00	ARM, REAR 1	1					
2	1HP–F3526–00	BUSH	2					
3	1XD–F2172–00	ARM, REAR 2	1					
4	1HP–F3526–00	BUSH	2					
5	1XD–F217M–00	ARM 1	1					
6	1HP–F3526–00	BUSH	2					
7	1XD–F217N–00	ARM 2	1					
8	1HP–F3526–00	BUSH	2					
9	90105–10267	BOLT, FLANGE	8					
10	90185–10012	NUT, SELF-LOCKING	8					
11	5KM–22149–10	WASHER	8					
12	1XD–F2128–00	COVER, THRUST 1	1					
13	1XD–F2129–00	COVER, THRUST 2	1					
14	90109–06220	BOLT	4					

POWER PARTS By ATVQUAD

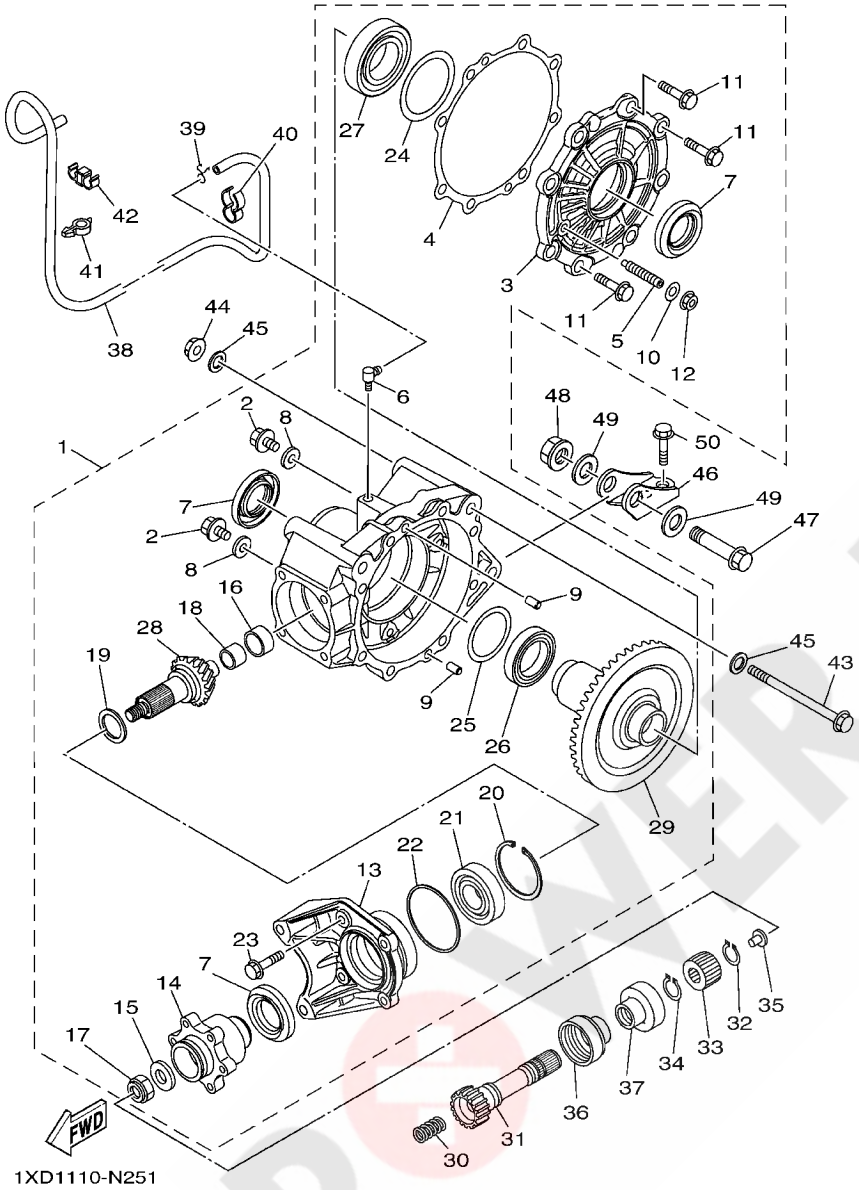

FIG. 25 DRIVE SHAFT

REF. NO.	PART NO.	DESCRIPTION	EUR					REMARKS
1	1XD–G6101–00	REAR AXLE GEAR CASE ASSY	1					
2	1XD–E2228–00	.BOLT	2					
3	1XD–G6152–00	.HOUSING, BEARING	1					
4	1XD–G631A–00	.GSKT., CASE	1					
5	1CT–G6156–00	.STOPPER, RING GEAR	1					
6	1CT–E5371–00	.BREATHER	1					
7	1XD–E511B–00	.OIL SEAL	3					
8	1CT–E1195–00	.GASKET	2					
9	1CT–E3362–00	.ROLLER	2					
10	1CT–G6819–00	.GASKET	1					
11	1XD–E2157–00	.BOLT	8					
12	1CT–E3275–00	.NUT, ADJUSTING	1					
13	1XD–G2134–00	.COVER	1					
14	1XD–G6126–00	.COUPLING	1					
15	1CT–E1557–00	.WASHER 1	1					
16	1XD–E1428–00	.BEARING 1	1					
17	1CT–E6377–00	.NUT, LOCK	1					
18	1XD–G5319–00	.CLIP	1					
19	1XD–G7531–00	.WHEEL, SPROCKET 1	1					
20	1XD–E1486–00	.CLIP	1					
21	1XD–E142A–00	.BEARING	1					
22	1XD–E1614–00	.OIL RING, PISTON	1					
23	1XD–G2478–00	.BOLT, LOCK PLATE	4					
24	1XD–G5567–00	.SHIM	1					
25	1XD–G5577–00	.SHIM	1					
26	1XD–E7051–00	.BEARING	1					
27	1XD–E1429–00	.BEARING 2	1					

POWER PARTS By 4xQUAD

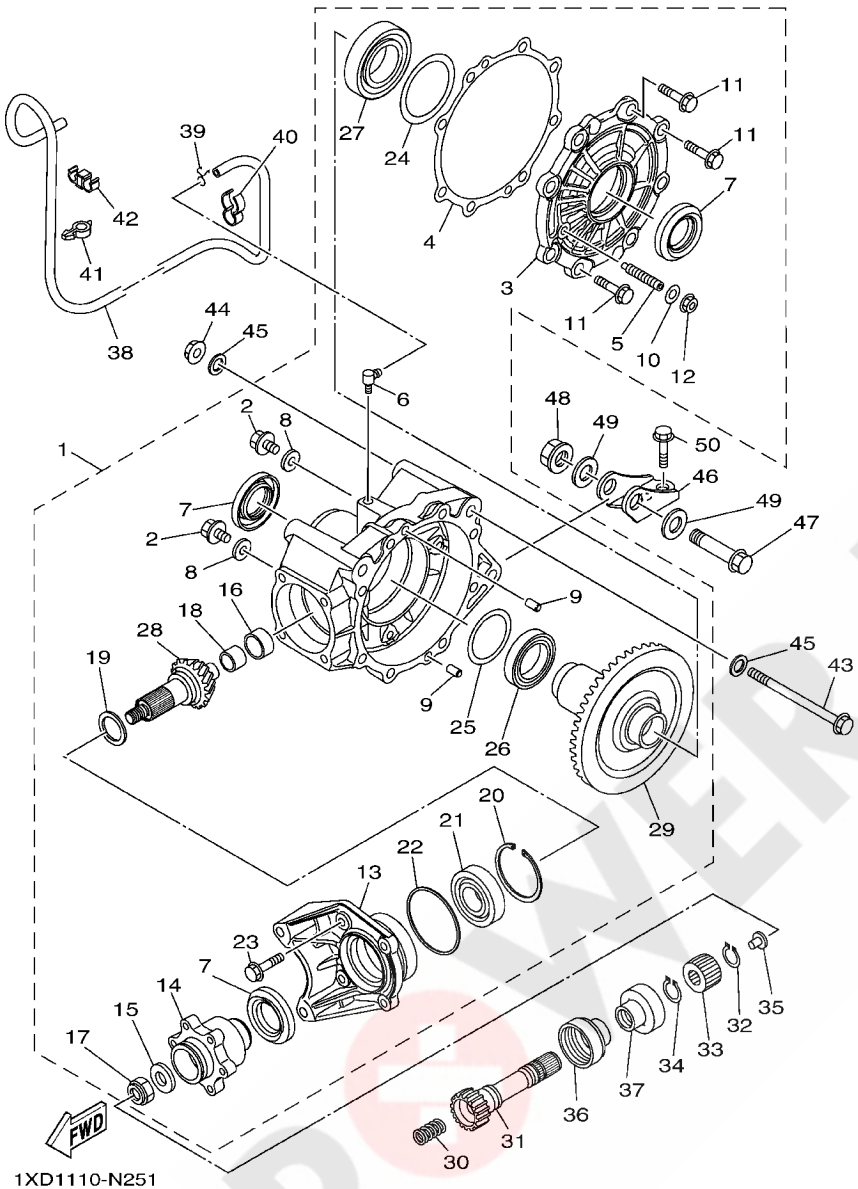

FIG. 25 DRIVE SHAFT

REF. NO.	PART NO.	DESCRIPTION	EUR					REMARKS
28	1XD–G6121–00	.GEAR, DRIVE PINION	1					
29	1XD–G6110–00	.RING GEAR COMP.	1					
30	90501–20361	SPRING, COMPRESSION	1					
31	1XD–G6172–00	SHAFT, DRIVE	1					
32	99009–19400	CIRCLIP	1					
33	5KM–46126–00	COUPLING	1					
34	93410–22039	CIRCLIP	1					
35	5KM–46559–00	DAMPER	1					
36	5KM–46137–00	SEAL 2	1					
37	5KM–46136–00	SEAL 1	1					
38	90445–07032	HOSE (L1920)	1					
39	90467–07029	CLIP	1					
40	90464–15065	CLAMP	1					
41	90464–10833	CLAMP	4					
42	90464–09013	CLAMP	1					
43	95812–12130	BOLT, FLANGE	2					
44	90185–12002	NUT, SELF-LOCKING	2					
45	92902–12200	WASHER	4					
46	1XD–F1981–00	BRKT., RR. AXLE	1					
47	90105–12082	BOLT, FLANGE	1					
48	90185–12002	NUT, SELF-LOCKING	1					
49	92902–12200	WASHER	2					
50	95812–08016	BOLT, FLANGE	2					

POWER PARTS By 4x4QUAD

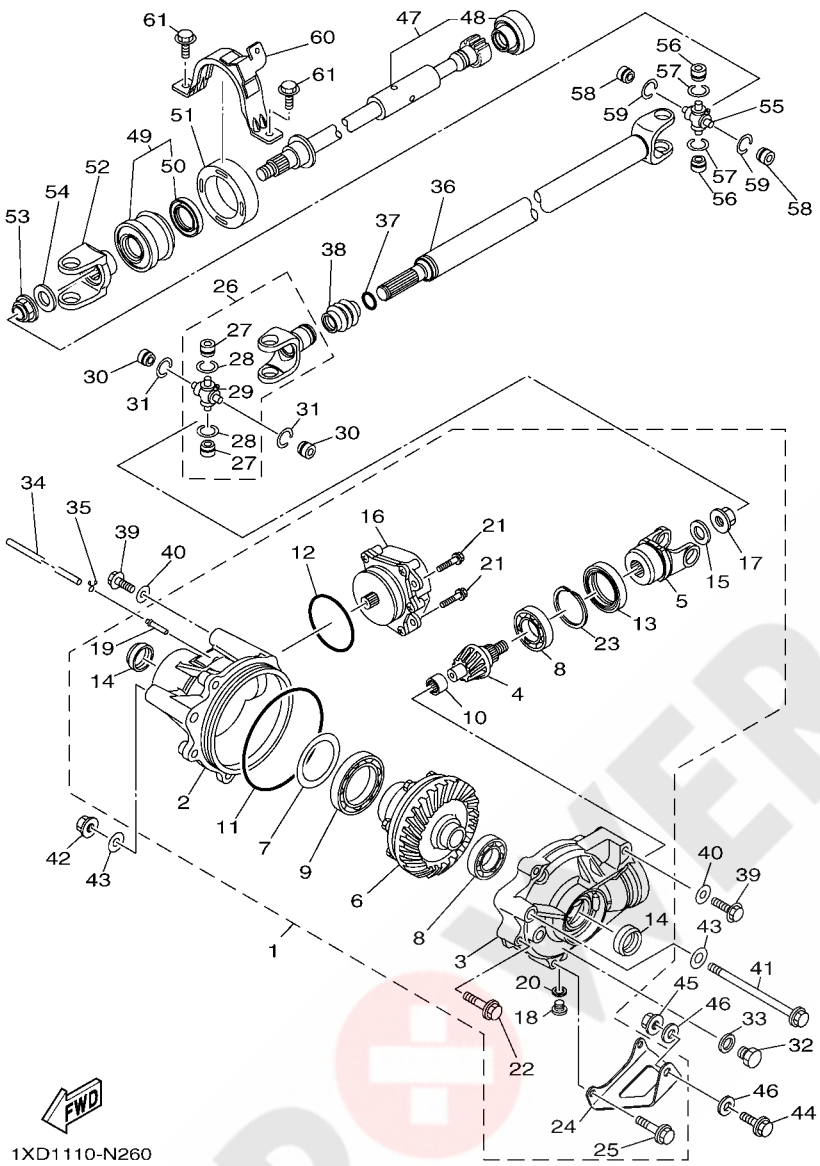

FIG. 26 FRONT DIFFERENTIAL

REF. NO.	PART NO.	DESCRIPTION	EUR					REMARKS
1	1XD–46160–00	FRONT AXLE GEAR CASE COMP.	1					
2	1XD–46162–00	.HOUSING, BEARING 2	1					
3	1XD–46161–00	.HOUSING, SHAFT DRIVE 2	1					
4	1XD–46141–00	.PINION, DRIVE 2	1					
5	4S1–46146–00	.YOKE, JOINT 2	1					
6	1XD–46470–00	.LIMITED SLIP DIFF. ASSY	1					
7	3B4–46117–00	.SHIM, RING GEAR (0.1T)	1					UR
	3B4–46117–10	.SHIM, RING GEAR (0.2T)	1					UR
	3B4–46117–20	.SHIM, RING GEAR (0.3T)	1					UR
	3B4–46117–30	.SHIM, RING GEAR (0.4T)	1					UR
8	93306–00613	.BEARING	2					
9	3B4–46164–00	.BEARING 1	1					
10	3B4–46166–00	.BEARING 3	1					
11	3B4–46134–00	.O-RING 1	1					
12	3B4–46135–00	.O-RING 2	1					
13	93105–46001	.OIL SEAL	1					
14	3B4–46163–00	.SEAL, OIL 1	2					
15	3B4–47359–00	.WASHER	1					
16	1HP–4616A–00	.SERVO MOTOR COMP	1					
17	4WV–46145–10	.NUT 1	1					
18	90340–10001	.PLUG, STRAIGHT SCREW	1					
19	5GH–46293–00	.TUBE	1					
20	90430–10003	.GASKET	1					
21	95812–06014	.BOLT, FLANGE	3					
22	95812–08040	.BOLT, FLANGE	3					
23	3B4–46142–00	.RING,HOLE SNAP 1	1					
24	1XD–46114–00	.PLATE, COVER	1					

POWER PARTS By SQUAD

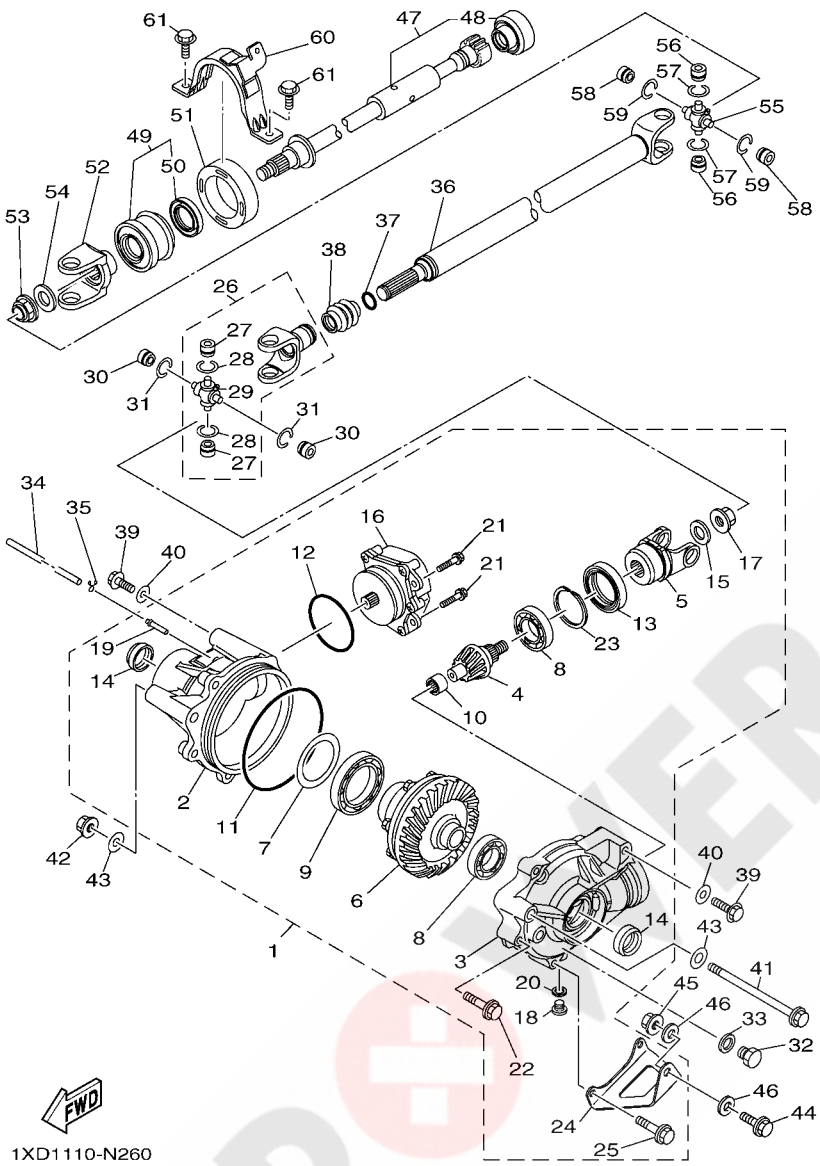

FIG. 26 FRONT DIFFERENTIAL

REF. NO.	PART NO.	DESCRIPTION	EUR					REMARKS
25	95812–08050	.BOLT, FLANGE	2					
26	2P5–46108–01	CROSS JOINT COMP. 3	1					
27	93399–99948	.BEARING	2					
28	93440–20088	.CIRCLIP	2					
29	5GT–46187–00	.SPIDER	1					
30	93399–99948	BEARING	2					
31	93440–20088	CIRCLIP	2					
32	90340–14029	PLUG, STRAIGHT SCREW	1					
33	214–11198–01	GASKET	1					
34	90445–07809	HOSE (L750)	1					
35	90467–07029	CLIP	1					
36	1XD–46109–00	DRIVE SHAFT COMP.	1					
37	93210–16M69	O-RING	1					
38	5GT–46136–00	SEAL 1	1					
39	90105–10255	BOLT, FLANGE	2					
40	90201–10035	WASHER, PLATE	2					
41	90105–12066	BOLT, FLANGE	1					
42	90185–12002	NUT, SELF-LOCKING	1					
43	92902–12200	WASHER	2					
44	95812–10025	BOLT, FLANGE	1					
45	90185–10011	NUT, SELF-LOCKING	1					
46	90201–10035	WASHER, PLATE	2					
47	1XD–46173–00	SHAFT, DRIVE 2	1					
48	5KM–46137–00	.SEAL 2	1					
49	1XD–46106–00	BEARING ASSY	1					
50	93102–30170	.OIL SEAL	1					
51	1XD–4581J–00	RUBBER SHAFT COUPLING	1					

POWER PARTS By 4x4QUAD

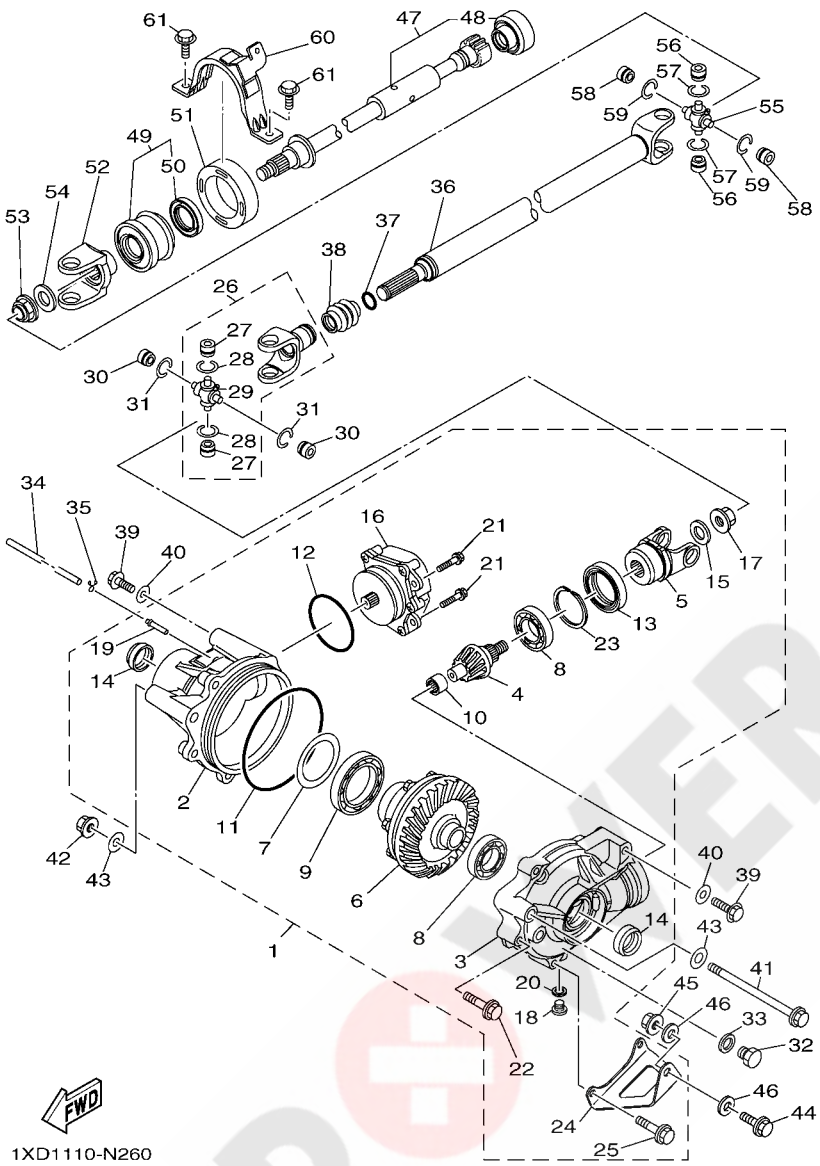

FIG. 26 FRONT DIFFERENTIAL

REF. NO.	PART NO.	DESCRIPTION	EUR					REMARKS
52	5B4–17556–00	YOKE, JOINT	1					
53	90179–16006	NUT	1					
54	90201–16021	WASHER, PLATE	1					
55	5GT–46187–00	SPIDER	1					
56	93399–99948	BEARING	2					
57	93440–20088	CIRCLIP	2					
58	93399–99948	BEARING	2					
59	93440–20088	CIRCLIP	2					
60	1XD–4613F–00	COVER 1	1					
61	95812–08020	BOLT, FLANGE	2					

POWER PARTS By 4xQUAD

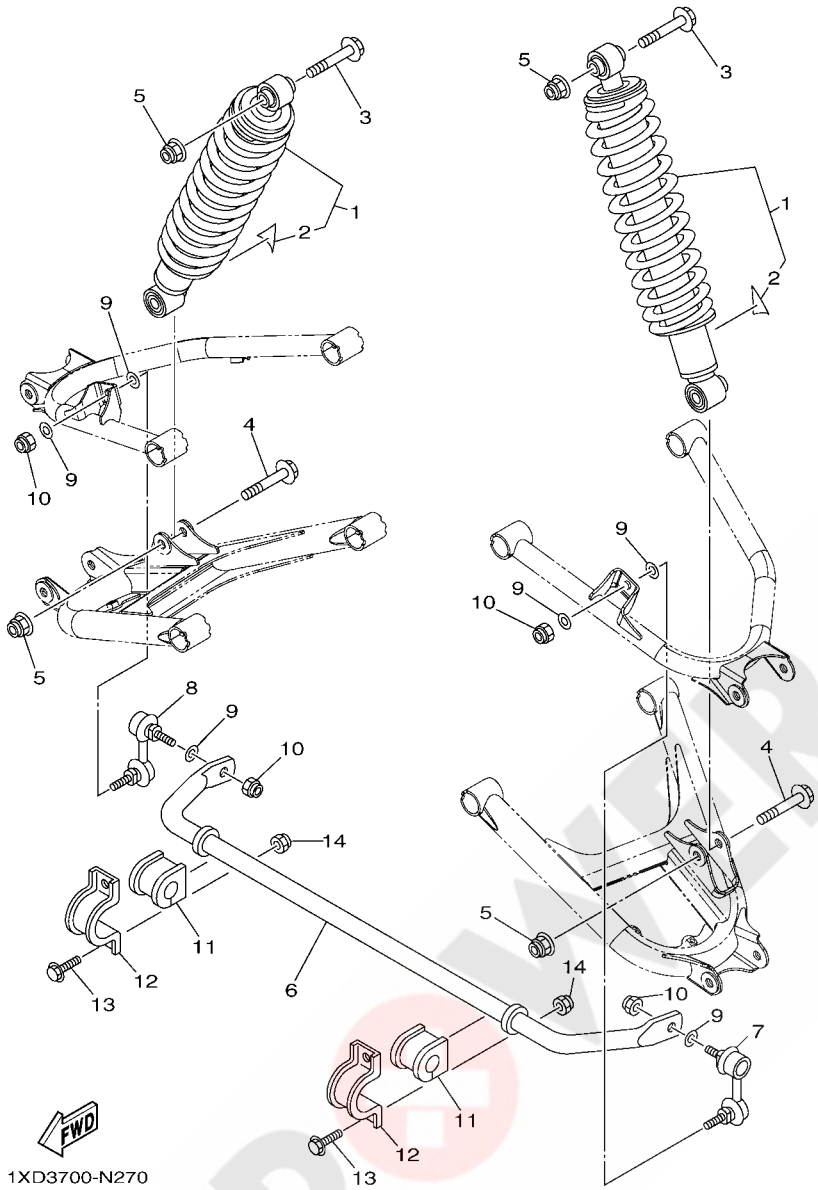

FIG. 27 REAR SUSPENSION

REF. NO.	PART NO.	DESCRIPTION	EUR					REMARKS
1	1XD–F2200–20	SHOCK ABSORBER ASSY, REAR	2					
2	1HP–F2259–21	.LABEL, WARNING	1					
3	90105–12056	BOLT, FLANGE	2					
4	90105–12055	BOLT, FLANGE	2					
5	90185–12009	NUT, SELF-LOCKING	4					
6	1XD–G7491–00	BAR, STABILIZER	1					
7	16B–2385M–10	JOINT, STABILIZER 2	1					
8	16B–2385L–10	JOINT, STABILIZER 1	1					
9	90201–10035	WASHER, PLATE	6					
10	90185–10012	NUT, SELF-LOCKING	4					
11	1XD–F386G–00	BUSH, STABILIZER FRONT	2					
12	1XD–F386H–00	COVER, STABILIZER FRONT	2					
13	95812–10020	BOLT, FLANGE	4					
14	90185–10011	NUT, SELF-LOCKING	4					

POWER PARTS By MOUAD

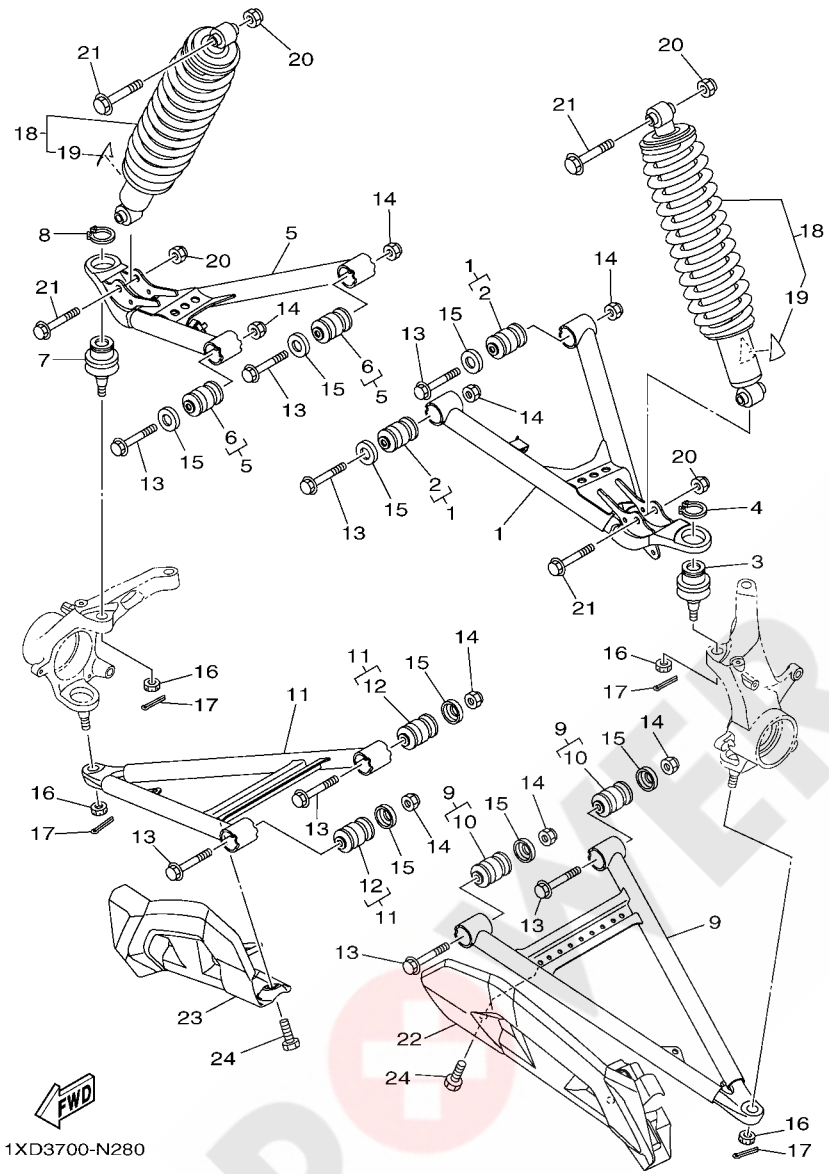

FIG. 28 FRONT SUSPENSION & WHEEL

REF. NO.	PART NO.	DESCRIPTION	EUR					REMARKS
1	1XD–F3540–00	FRONT UPPER ARM COMP. (LEFT)	1					
2	1HP–F3526–00	.BUSH	2					
3	1XD–23579–00	BALL JOINT 2	1					
4	99009–32400	CIRCLIP	1					
5	1XD–F3550–00	FRONT UPPER ARM COMP. (RIGHT)	1					
6	1HP–F3526–00	.BUSH	2					
7	1XD–23579–00	BALL JOINT 2	1					
8	99009–32400	CIRCLIP	1					
9	1XD–F3570–00	FRONT LOWER ARM COMP. (LEFT)	1					
10	1HP–F3526–00	.BUSH	2					
11	1XD–F3580–00	FRONT LOWER ARM COMP. (RIGHT)	1					
12	1HP–F3526–00	.BUSH	2					
13	90105–10267	BOLT, FLANGE	8					
14	90185–10012	NUT, SELF-LOCKING	8					
15	5KM–22149–10	WASHER	8					
16	90171–12001	NUT, CASTLE	4					
17	91402–25020	PIN, COTTER	4					
18	1XD–F3390–20	SHOCK ABSORBER ASSY 2	2					
19	1HP–F2259–21	.LABEL, WARNING	1					
20	90185–10012	NUT, SELF-LOCKING	4					
21	90105–10283	BOLT, FLANGE	4					
22	1XD–F3123–00	COVER, UNDER 1	1					
23	1XD–F3133–00	COVER, LOWER 2	1					
24	90109–06220	BOLT	4					

POWER PARTS By axoMAD

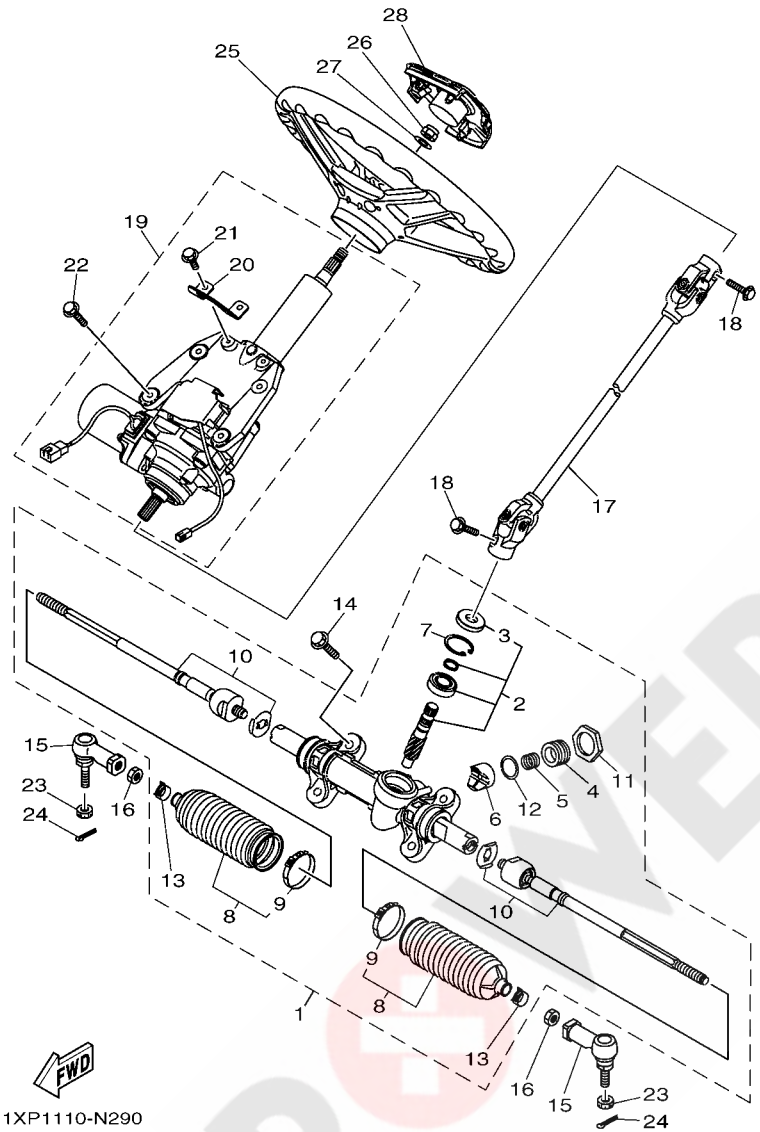

FIG. 29 STEERING

REF. NO.	PART NO.	DESCRIPTION	EUR					REMARKS
1	1XD–F3400–00	STEERING ASSY	1					
2	1XD–F38G0–00	.STEERING PINION SET	1					
3	1XD–F3844–00	..SEAL	1					
4	1XD–F387G–00	.COVER, ADJUST	1					
5	1XD–F387K–00	.SPRING, PRESSURE	1					
6	1XD–F387F–00	.PAD, PRESSURE	1					
7	1XD–F387J–00	.RING, STOPPER	1					
8	1XD–F1208–00	.SEAL SET, 1	2					
9	1XD–F3489–00	..BAND	1					
10	1XD–F38H0–00	.RACK END SET	2					
11	1XD–F178K–00	.LOCK ASSY	1					
12	1XD–F3165–00	.WASHER, FELT	1					
13	1XD–F3447–00	.CLIP	2					
14	95022–10030	BOLT, FLANGE	4					
15	5B4–23841–00	JOINT, UNIVERSAL 1	2					
16	1P0–F3833–00	NUT 1	2					
17	1XD–F3840–00	STEERING SHAFT ASSY	1					
18	95022–08025	BOLT, FLANGE	2					
19	1XP–238D0–00	STEERING COLUMN SET	1					
20	1XP–23881–00	.BRACKET 1	1					
21	95822–06016	.BOLT, FLANGE	2					
22	95812–08020	BOLT, FLANGE	4					
23	90171–12001	NUT, CASTLE	2					
24	91402–20020	PIN, COTTER	2					
25	16B–F3838–00	WHEEL, STEERING	1					
26	90185–12008	NUT, SELF-LOCKING	1					
27	92902–12200	WASHER	1					

POWER PARTS By 4WD

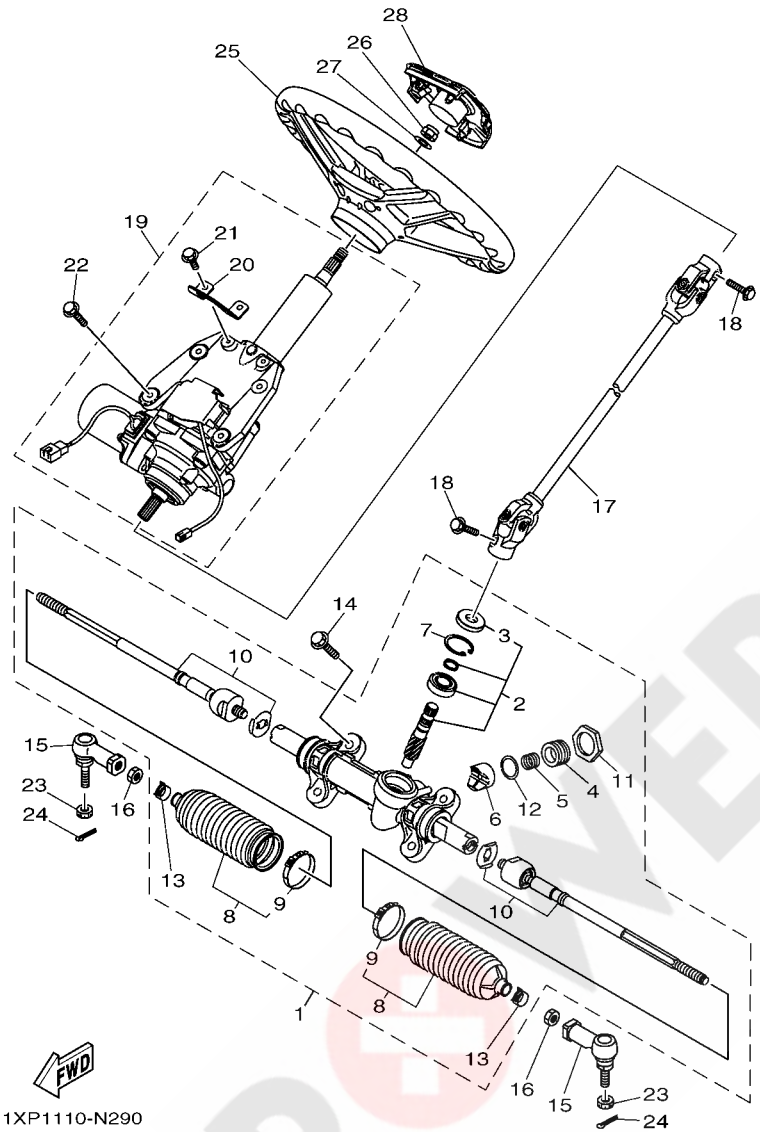

FIG. 29 STEERING

REF. NO.	PART NO.	DESCRIPTION	EUR					REMARKS
28	1XD–F3818–00	COVER, STEERING	1					

POWER PARTS By 4xQUAD

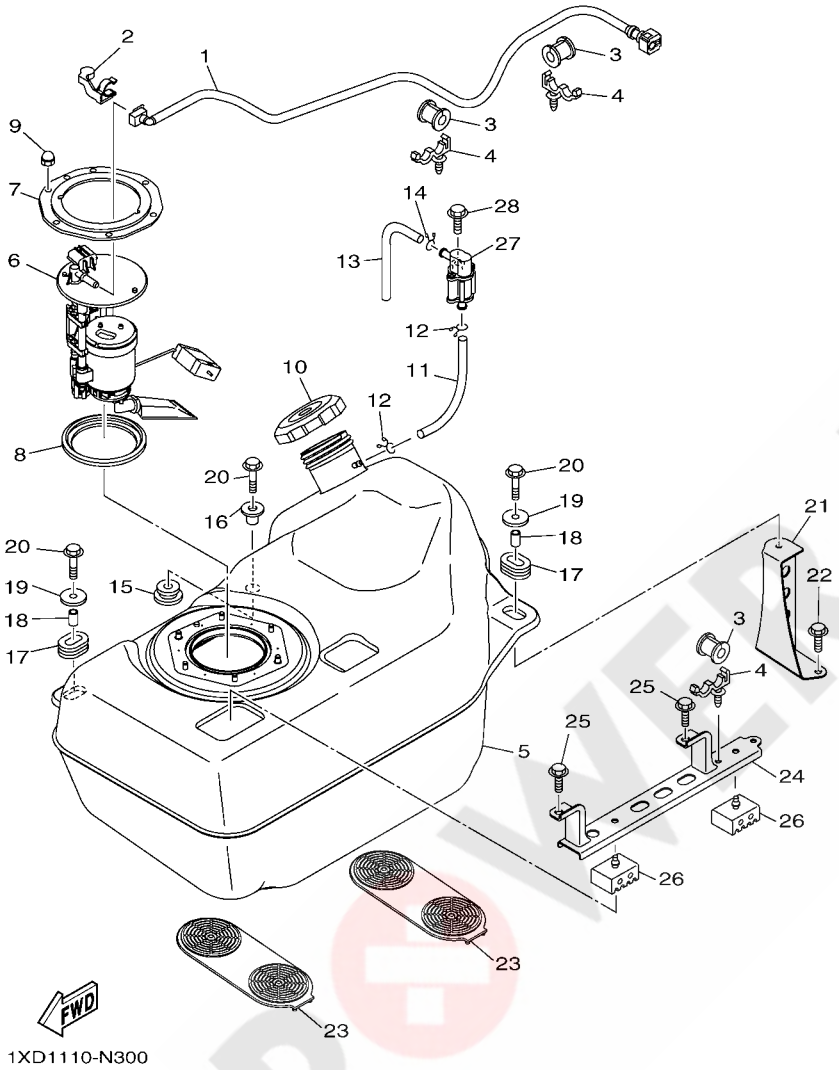

FIG. 30 FUEL TANK

REF. NO.	PART NO.	DESCRIPTION	EUR					REMARKS
1	1XD–13971–00	PIPE, FUEL 1	1					
2	90464–14004	CLAMP	1					
3	90480–20543	GROMMET	3					
4	90464–20010	CLAMP	3					
5	1XD–F4110–00	FUEL TANK COMP.	1					
6	3B4–13907–10	FUEL PUMP COMP.	1					
7	3B4–24491–00	BRACKET, FUEL PUMP	1					
8	1S3–24486–00	O-RING	1					
9	95302–06800	NUT, CROWN	6					
10	2P5–24610–00	CAP ASSY	1					
11	90445–09827	HOSE (L160)	1					
12	90467–09006	CLIP	2					
13	90445–09826	HOSE (L85)	1					
14	90467–09006	CLIP	1					
15	90480–18016	GROMMET	1					
16	90387–07021	COLLAR	1					
17	90480–01400	GROMMET	2					
18	90387–061V1	COLLAR	2					
19	90201–065G8	WASHER, PLATE	2					
20	95802–06030	BOLT, FLANGE	3					
21	1XD–F4291–00	BRACKET, FUEL TANK 1	1					
22	90105–06831	BOLT, FLANGE	2					
23	1XD–24181–00	DAMPER, LOCATING 1	2					
24	1XD–F4157–00	STAY, FUEL TANK 1	1					
25	90105–08867	BOLT, FLANGE	2					
26	1XD–24182–00	DAMPER, LOCATING 2	2					
27	28P–24380–00	PIPE JOINT ASSY	1					

POWER PARTS By ATVQUAD

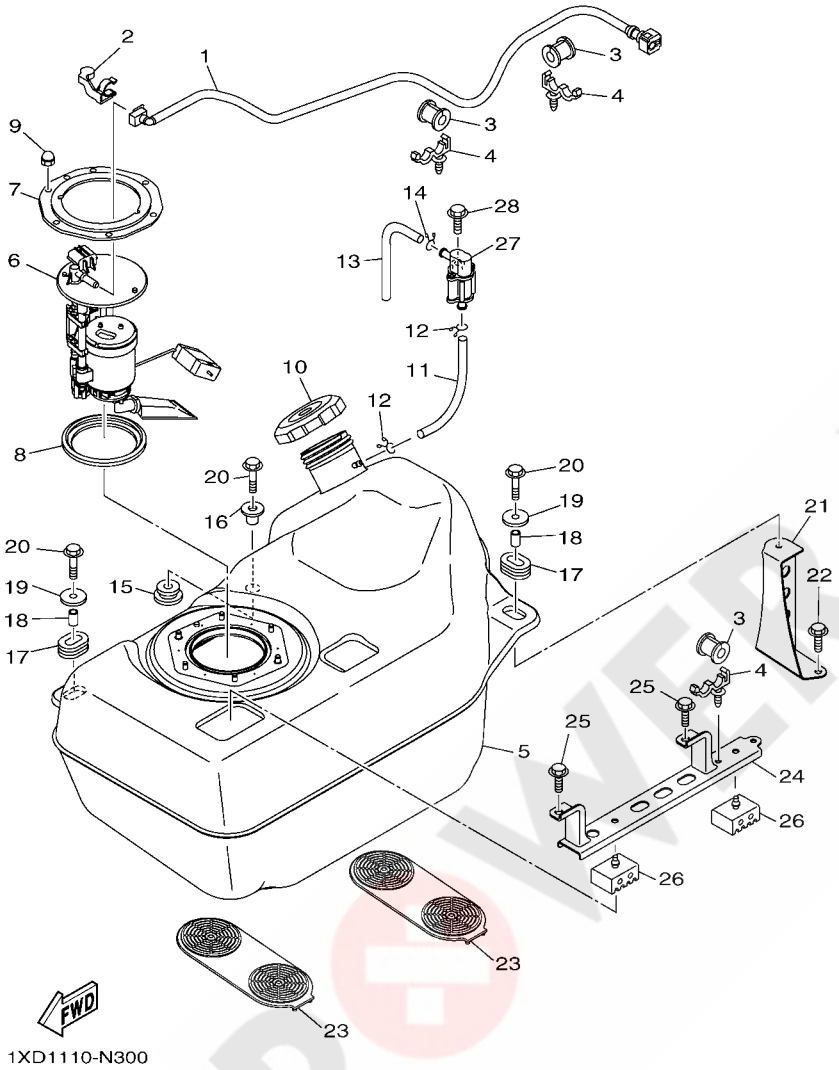

FIG. 30 FUEL TANK

REF. NO.	PART NO.	DESCRIPTION	EUR					REMARKS
28	90105–06832	BOLT, FLANGE	1					

POWER PARTS By 4xQUAD

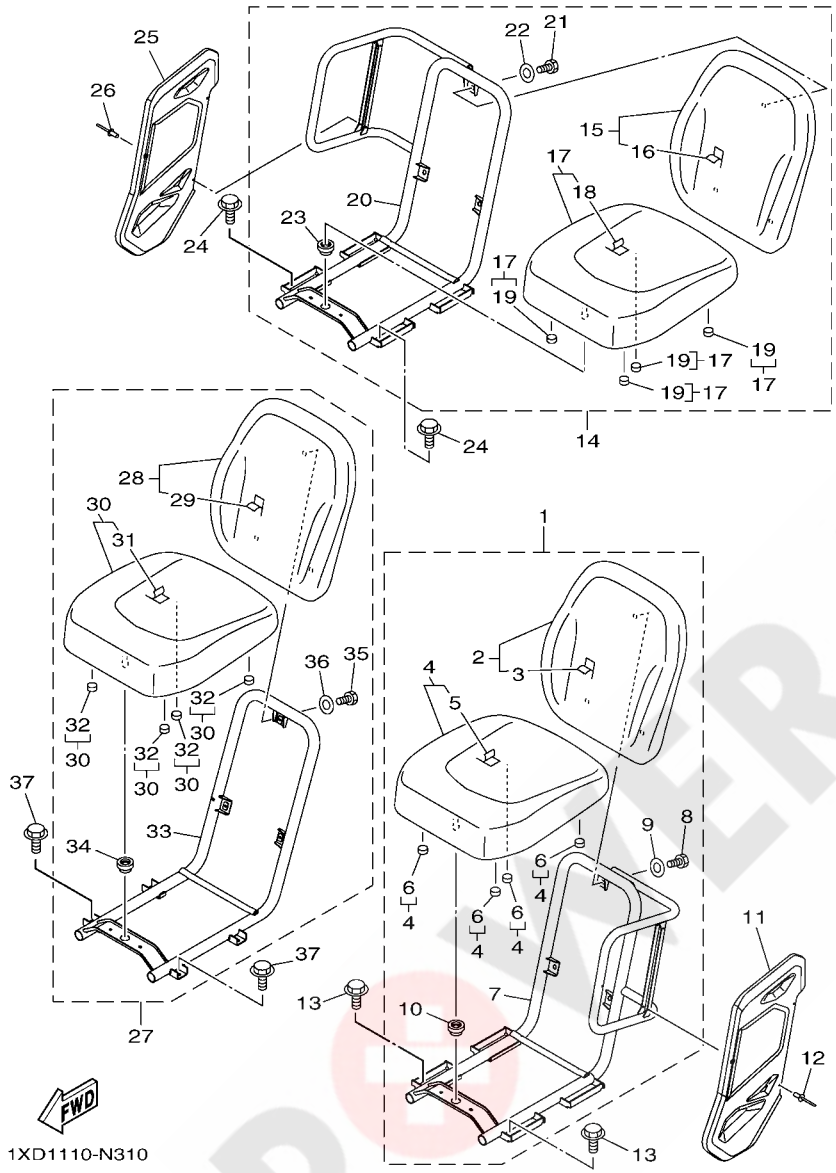

FIG. 31 SEAT

REF. NO.	PART NO.	DESCRIPTION	EUR					REMARKS
1	1XD–F7498–00	SEAT 1	1					
2	1XD–F4790–00	.SEAT BACK ASSY	1					
3	1XD–F4711–00	..COVER, SINGLE SEAT	1					
4	1XD–F4700–00	.SEAT ASSY	1					
5	1XD–F4731–00	..COVER, SEAT	1					
6	1XD–F4723–00	..DAMPER, SEAT	4					
7	1XD–F473C–00	.FRAME, SEAT 1	1					
8	90101–06832	.BOLT	3					
9	90201–06078	.WASHER, PLATE	3					
10	1XD–F4742–00	.GROMMET	1					
11	1XD–F475X–00	COVER,2	1					
12	90267–489U9	RIVET, BLIND	3					
13	95812–08012	BOLT, FLANGE	4					
14	1XD–F7499–00	SEAT 2	1					
15	1XD–F4790–00	.SEAT BACK ASSY	1					
16	1XD–F4711–00	..COVER, SINGLE SEAT	1					
17	1XD–F4700–00	.SEAT ASSY	1					
18	1XD–F4731–00	..COVER, SEAT	1					
19	1XD–F4723–00	..DAMPER, SEAT	4					
20	1XD–F473D–00	.FRAME, SEAT 2	1					
21	90101–06832	.BOLT	3					
22	90201–06078	.WASHER, PLATE	3					
23	1XD–F4742–00	.GROMMET	1					
24	95812–08012	BOLT, FLANGE	4					
25	1XD–F475X–00	COVER,2	1					
26	90267–489U9	RIVET, BLIND	3					
27	1XD–F749A–00	SEAT 3	1					

POWER PARTS By ATV&QUAD

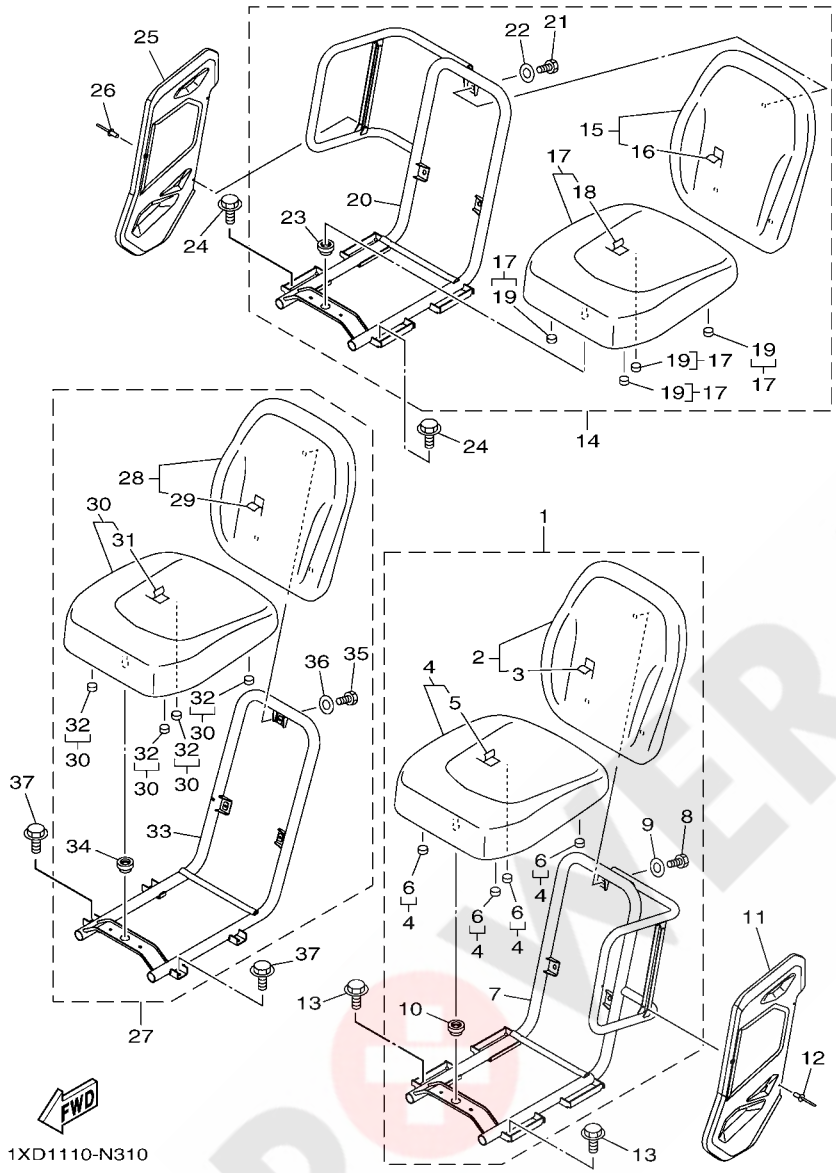

FIG. 31 SEAT

REF. NO.	PART NO.	DESCRIPTION	EUR					REMARKS
28	1XD–F4790–00	.SEAT BACK ASSY	1					
29	1XD–F4711–00	..COVER, SINGLE SEAT	1					
30	1XD–F4700–00	.SEAT ASSY	1					
31	1XD–F4731–00	..COVER, SEAT	1					
32	1XD–F4723–00	..DAMPER, SEAT	4					
33	1XD–F473Y–00	.FRAME, SEAT 3	1					
34	1XD–F4742–00	.GROMMET	1					
35	90101–06832	.BOLT	3					
36	90201–06078	.WASHER, PLATE	3					
37	95812–08012	BOLT, FLANGE	4					

POWER PARTS By AXQUAD

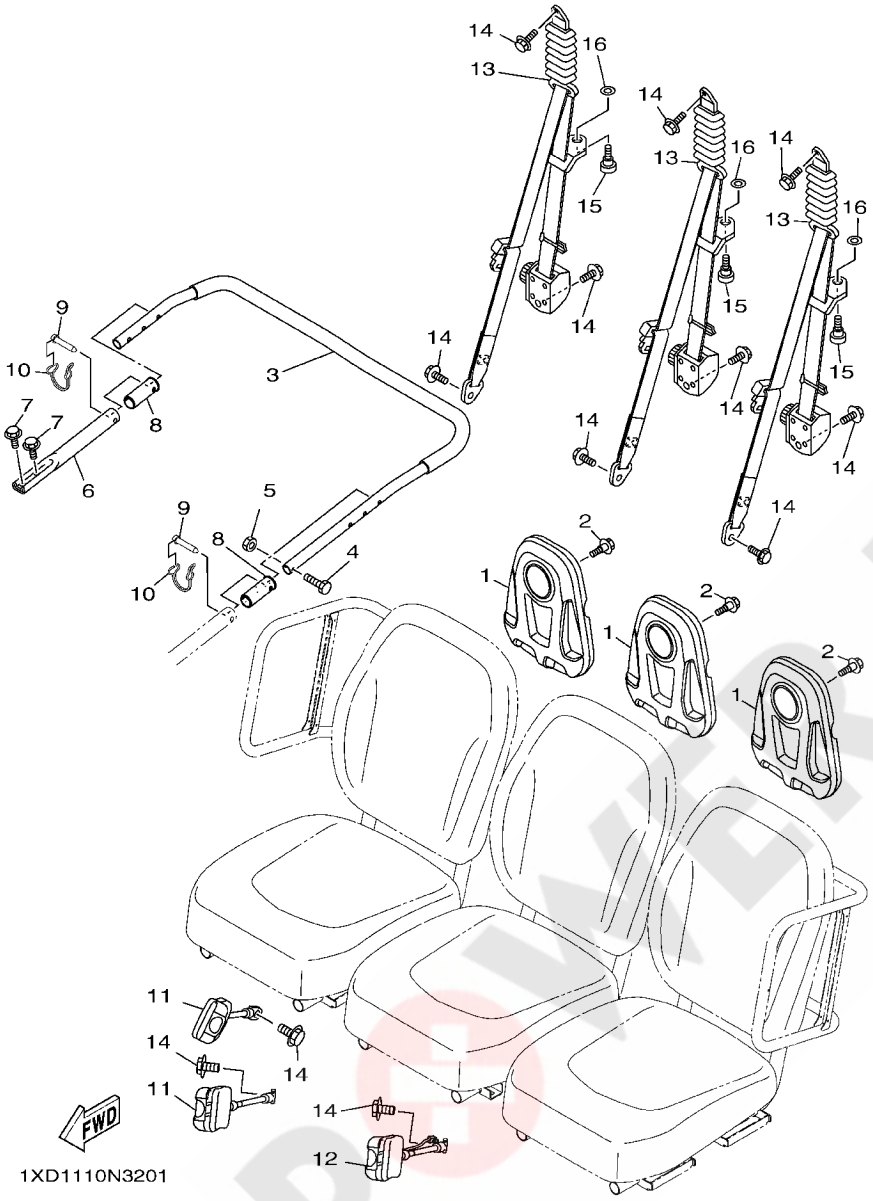

FIG. 32 SEAT 2

REF. NO.	PART NO.	DESCRIPTION	EUR					REMARKS
1	5UG–F472L–50	HEAD REST	3					
2	90109–063F5	BOLT	9					
3	1XD–F470J–00	ASSIST GRIP ASSY., 1	1					
4	90101–06824	BOLT	1					
5	95612–06100	NUT, U	1					
6	1XD–F6136–00	PIPE 2	1					
7	95812–08012	BOLT, FLANGE	2					
8	1XD–F467K–00	BUSH, CAP	2					
9	1XD–F5926–00	BOLT	2					
10	1XD–F311F–00	SNAP, PIN	2					
11	1RB–F470R–00	FR. BELT RECEIVER ASSY	2					
12	1XD–F470R–00	FR. BELT RECEIVER ASSY	1					
13	1RB–F470L–00	FR. SEAT BELT ASSY 1	3					
14	95812–12020	BOLT, FLANGE	12					
15	16B–F3394–01	BOLT, SPECIAL	3					
16	90201–11801	WASHER, PLATE	3					

POWER PARTS By 4QUAD

FIG. 33 FRONT WHEEL

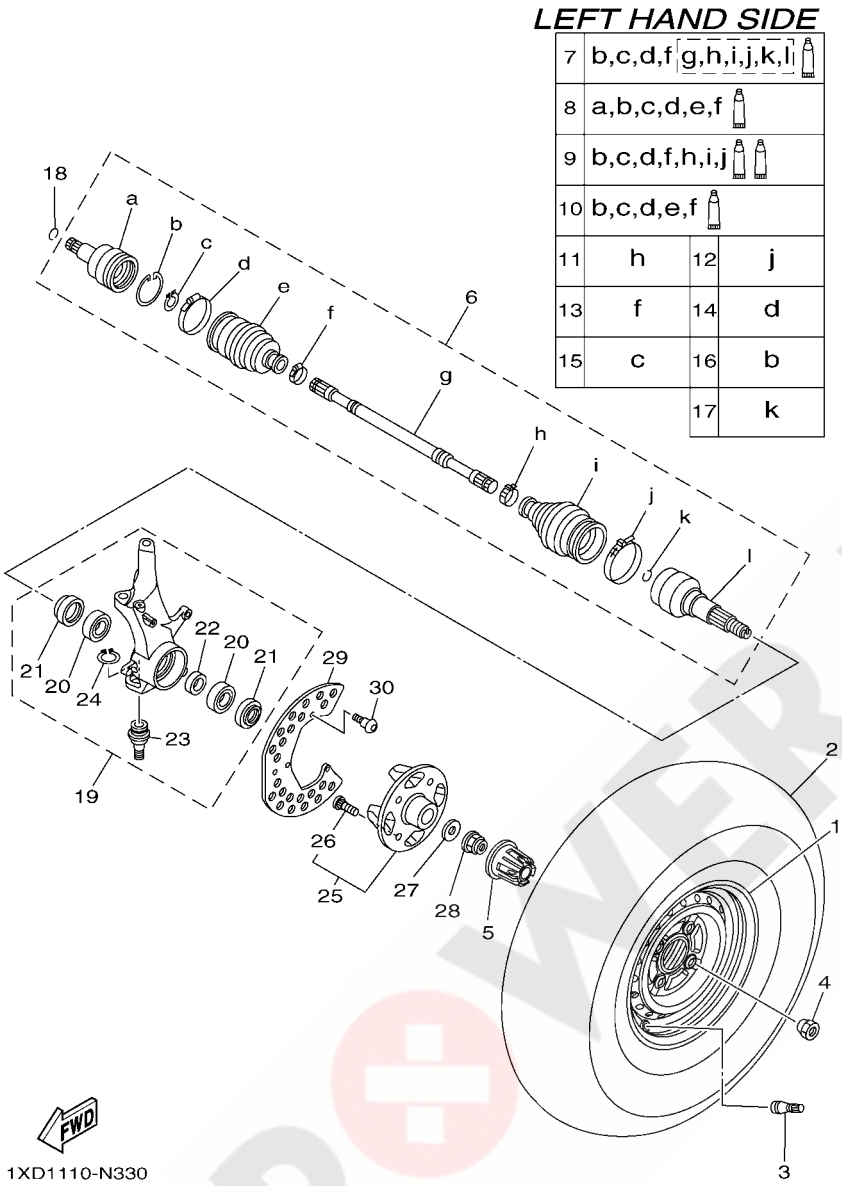

REF. NO.	PART NO.	DESCRIPTION	EUR					REMARKS
1	1XD–F5180–00	WHEEL COMP.	1					
2	94108–12818	TIRE (25X8.00-12 MU09 2PR TL)	1					MAXXIS
3	93900–00813	VALVE, RIM (TR413)	1					MAXXIS
4	90179–12262	NUT	4					
5	1XD–F512A–00	CAP, WHEEL	1					
6	1XD–F518F–00	DRIVE SHAFT ASSY	1					
7	1XD–F530T–10	.BALL JOINT SET	1					
8	1XD–F530V–10	.DOUBLE OFF SET JOINT	1					
9	1XD–F530X–10	.BOOT SET (BALL JOINT)	1					
10	1XD–F530Y–10	.BOOT SET(DOUBLE OFFSET JOINT)	1					
11	1XD–F511H–00	.BOOT BAND(DOUBLE OFFSET JOINT)	1					
12	1XD–F511G–00	.BOOT BAND (BALL JOINT)	1					
13	5UG–F510U–00	.BOOT BAND (SMALL)	1					
14	1XD–F512G–10	.BOOT BAND (SMALL)	1					
15	3B4–2512J–00	.SNAP RING	1					
16	3B4–25182–00	.CIRCLIP	1					
17	5UG–F512H–00	.CIRCLIP	1					
18	93450–22119	CIRCLIP	1					
19	1XD–F3501–00	STEERING KNUCKLE ASSY (LEFT)	1					
20	93306–20725	.BEARING	2					
21	93106–50002	.OIL SEAL	2					
22	90387–35007	.COLLAR	1					
23	1XD–23579–00	.BALL JOINT 2	1					
24	99009–32400	.CIRCLIP	1					
25	1XD–25111–00	HUB, FRONT	1					
26	90114–12002	.BOLT, SERRATION	4					
27	90201–25023	WASHER, PLATE	1					

POWER PARTS For QUAD

FIG. 33 FRONT WHEEL

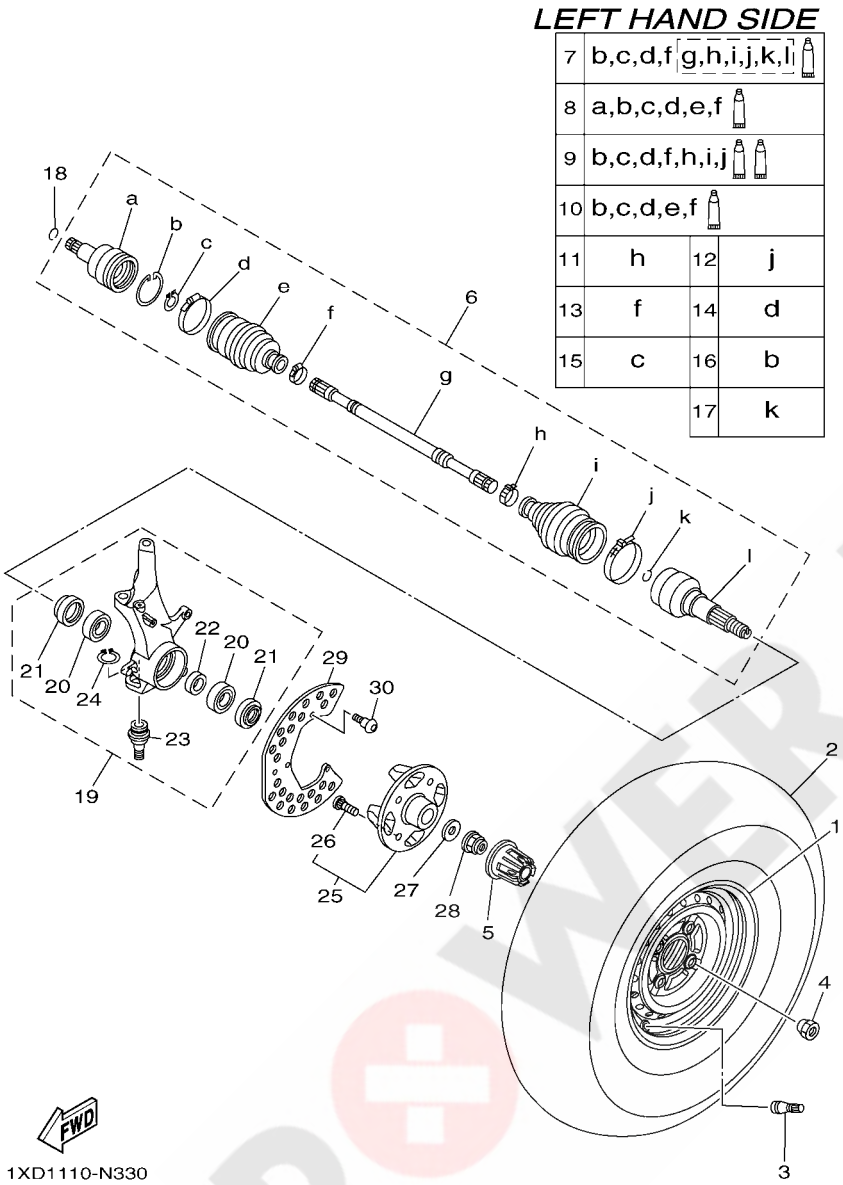

REF. NO.	PART NO.	DESCRIPTION	EUR					REMARKS
28	90179–24006	NUT	1					
29	1XD–F514A–00	RING, WHEEL 1	1					
30	92012–06012	BOLT, BUTTON HEAD	3					

POWER PARTS By 4xQUAD

FIG. 34 FRONT WHEEL 2

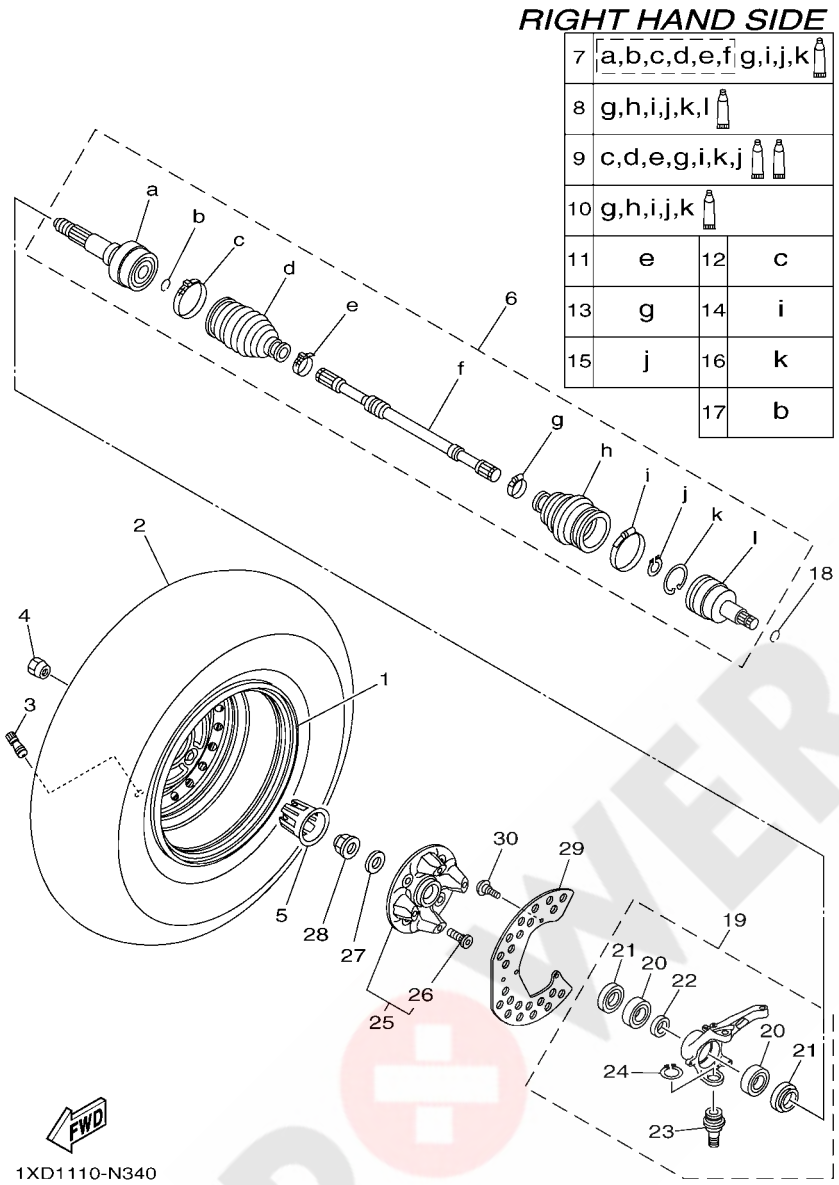

REF. NO.	PART NO.	DESCRIPTION	EUR					REMARKS
1	1XD–F5180–00	WHEEL COMP.	1					
2	94108–12818	TIRE (25X8.00-12 MU09 2PR TL)	1					MAXXIS
3	93900–00813	VALVE, RIM (TR413)	1					MAXXIS
4	90179–12262	NUT	4					
5	1XD–F512A–00	CAP, WHEEL	1					
6	1XD–F518F–00	DRIVE SHAFT ASSY	1					
7	1XD–F530T–10	.BALL JOINT SET	1					
8	1XD–F530V–10	.DOUBLE OFF SET JOINT	1					
9	1XD–F530X–10	.BOOT SET (BALL JOINT)	1					
10	1XD–F530Y–10	.BOOT SET(DOUBLE OFFSET JOINT)	1					
11	1XD–F511H–00	.BOOT BAND(DOUBLE OFFSET JOINT)	1					
12	1XD–F511G–00	.BOOT BAND (BALL JOINT)	1					
13	5UG–F510U–00	.BOOT BAND (SMALL)	1					
14	1XD–F512G–10	.BOOT BAND (SMALL)	1					
15	3B4–2512J–00	.SNAP RING	1					
16	3B4–25182–00	.CIRCLIP	1					
17	5UG–F512H–00	.CIRCLIP	1					
18	93450–22119	CIRCLIP	1					
19	1XD–F3502–00	STEERING KNUCKLE ASSY (RIGHT)	1					
20	93306–20725	.BEARING	2					
21	93106–50002	.OIL SEAL	2					
22	90387–35007	.COLLAR	1					
23	1XD–23579–00	.BALL JOINT 2	1					
24	99009–32400	.CIRCLIP	1					
25	1XD–25111–00	HUB, FRONT	1					
26	90114–12002	.BOLT, SERRATION	4					
27	90201–25023	WASHER, PLATE	1					

POWER PARTS By ATV QUAD

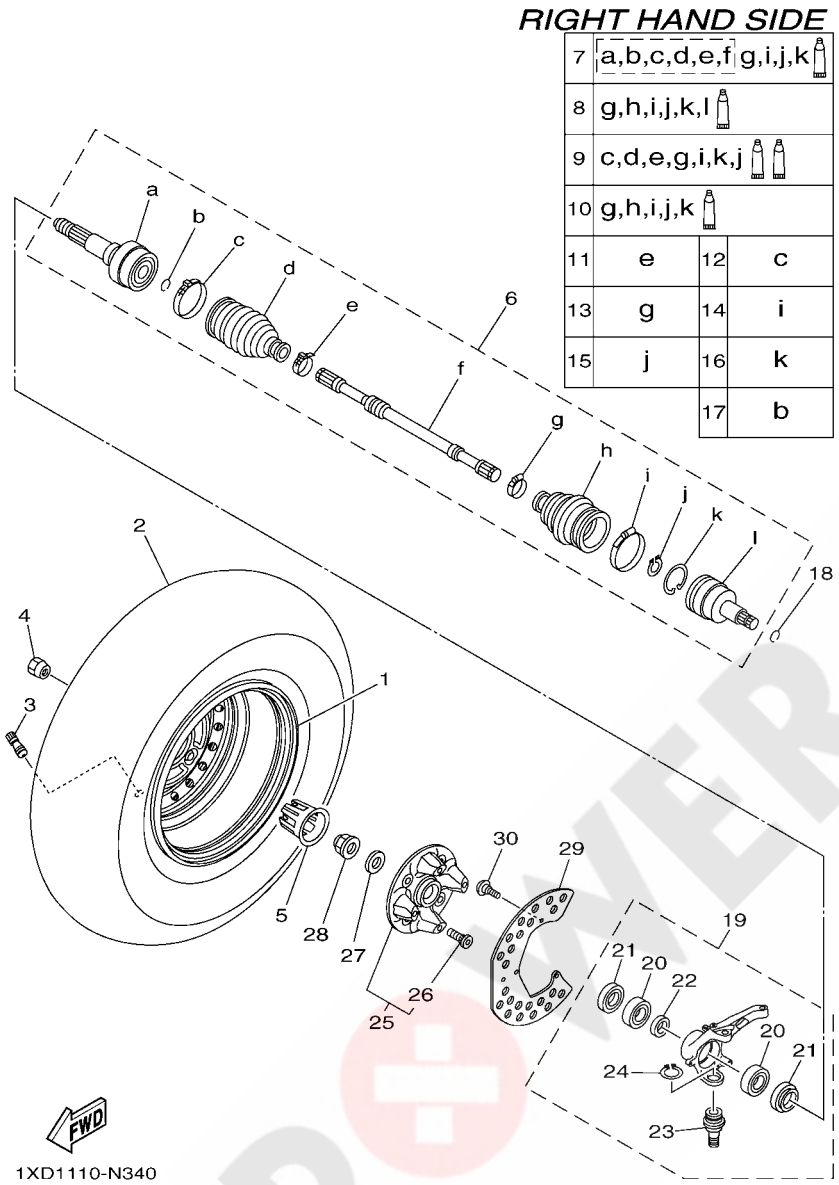

FIG. 34 FRONT WHEEL 2

REF. NO.	PART NO.	DESCRIPTION	EUR					REMARKS
28	90179–24006	NUT	1					
29	1XD–F514A–00	RING, WHEEL 1	1					
30	92012–06012	BOLT, BUTTON HEAD	3					

POWER PARTS By 4xQUAD

FIG. 35 FRONT BRAKE CALIPER

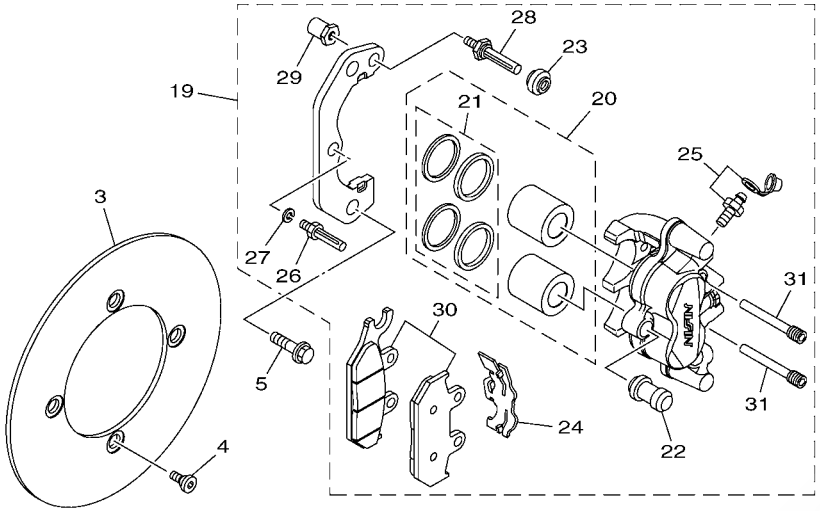

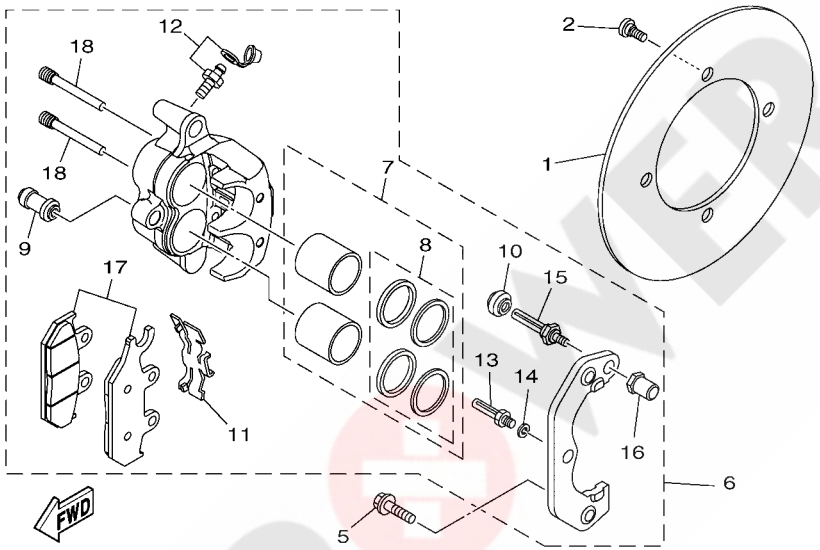

1XD1110-N350

REF. NO.	PART NO.	DESCRIPTION	EUR					REMARKS
1	1XD–F582T–00	DISC, BRAKE (LEFT)	1					
2	90109–08082	BOLT	4					
3	1XD–F582T–00	DISC, BRAKE (LEFT)	1					
4	90109–08082	BOLT	4					
5	90105–10265	BOLT, FLANGE	4					
6	1XD–2580T–00	CALIPER ASSY (LEFT)	1					
7	1XD–25802–00	.PISTON ASSY, CALIPER	1					
8	1XD–25803–00	..CALIPER SEAL KIT	1					
9	1UY–25937–51	.BOOT 2	1					
10	3JD–25917–00	.BOOT, CALIPER	1					
11	1XD–25919–00	.SUPPORT, PAD	1					
12	1UY–W0048–50	.BLEED SCREW KIT	1					
13	1UY–25926–51	.BOLT	1					
14	1UY–25938–51	.WASHER, SPRING	1					
15	3JD–25926–00	.BOLT	1					
16	3JD–25961–00	.NUT	1					
17	1XD–25805–00	.BRAKE PAD KIT	1					
18	3TB–25933–00	.WASHER, PAD PIN	2					
19	1XD–2580U–00	CALIPER ASSY (RIGHT)	1					
20	1XD–25802–00	.PISTON ASSY, CALIPER	1					
21	1XD–25803–00	..CALIPER SEAL KIT	1					
22	1UY–25937–51	.BOOT 2	1					
23	3JD–25917–00	.BOOT, CALIPER	1					
24	1XD–25919–00	.SUPPORT, PAD	1					
25	1UY–W0048–50	.BLEED SCREW KIT	1					
26	1UY–25926–51	.BOLT	1					
27	1UY–25938–51	.WASHER, SPRING	1					

POWER PARTS By 4QUAD

FIG. 35 FRONT BRAKE CALIPER

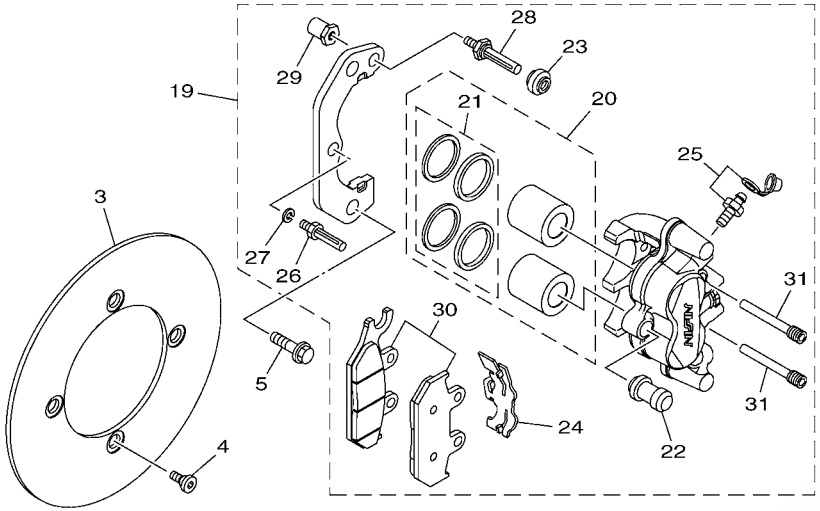

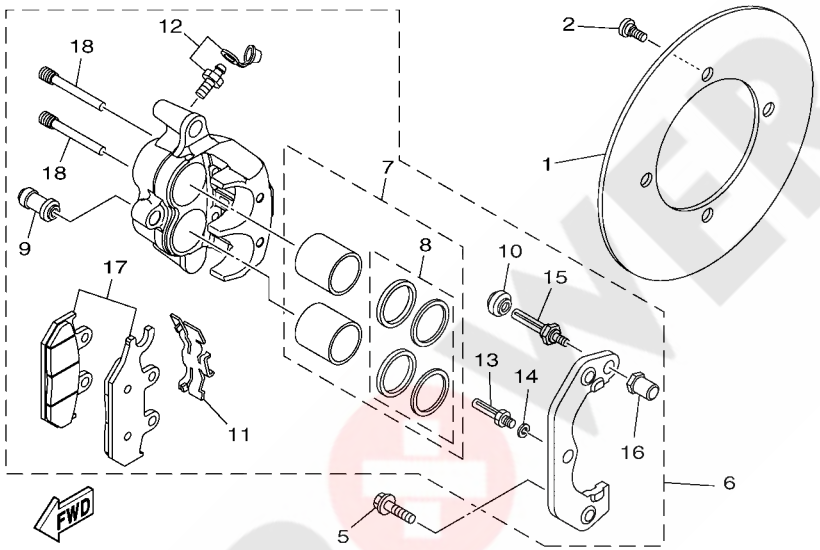

1XD1110-N350

REF. NO.	PART NO.	DESCRIPTION	EUR					REMARKS
28	3JD–25926–00	.BOLT	1					
29	3JD–25961–00	.NUT	1					
30	1XD–25805–10	.BRAKE PAD KIT	1					
31	3TB–25933–00	.WASHER, PAD PIN	2					

POWER PARTS By 4xQUAD

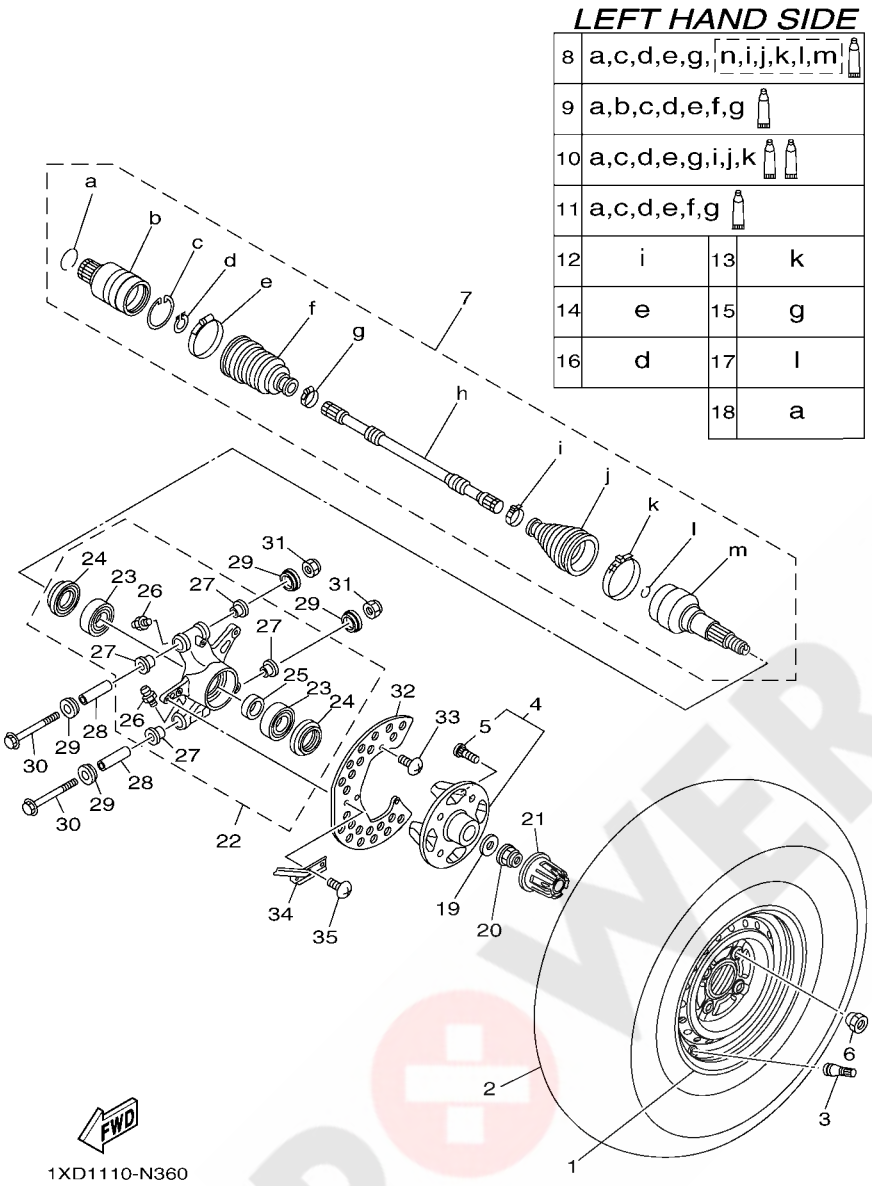

FIG. 36 REAR WHEEL

REF. NO.	PART NO.	DESCRIPTION	EUR					REMARKS
1	1XD–F5390–00	REAR WHEEL COMP.	1					
2	94110–12815	TIRE (25X10.00-12 MU10 4PR TL)	1					MAXXIS
3	93900–00813	VALVE, RIM (TR413)	1					MAXXIS
4	1XD–25111–00	HUB, FRONT	1					
5	90114–12002	.BOLT, SERRATION	4					
6	90179–12262	NUT	4					
7	1XD–F531H–00	REAR DRIVE SHAFT ASSY	1					
8	1XD–F530T–00	.BALL JOINT SET	1					
9	1XD–F530V–00	.DOUBLE OFF SET JOINT	1					
10	1XD–F530X–00	.BOOT SET (BALL JOINT)	1					
11	1XD–F530Y–00	.BOOT SET(DOUBLE OFFSET JOINT)	1					
12	1XD–F511H–00	.BOOT BAND(DOUBLE OFFSET JOINT)	1					
13	1XD–F511G–00	.BOOT BAND (BALL JOINT)	1					
14	1XD–F512G–00	.BOOT BAND (SMALL)	1					
15	1XD–F510U–00	.BOOT BAND (SMALL)	1					
16	1XD–F512J–00	.SNAP RING	1					
17	5UG–F512H–00	.CIRCLIP	1					
18	1XD–F536E–00	.CLIP, SPRING	1					
19	90201–25023	WASHER, PLATE	1					
20	90179–24006	NUT	1					
21	1XD–F512A–00	CAP, WHEEL	1					
22	1XD–F530F–00	REAR KNUCKLE ASSY	1					
23	93306–20725	.BEARING	2					
24	93106–50002	.OIL SEAL	2					
25	90387–35007	.COLLAR	1					
26	93700–06004	.NIPPLE, GREASE	2					
27	90381–18003	.BUSH, SOLID	4					

POWER PARTS By KOUAD

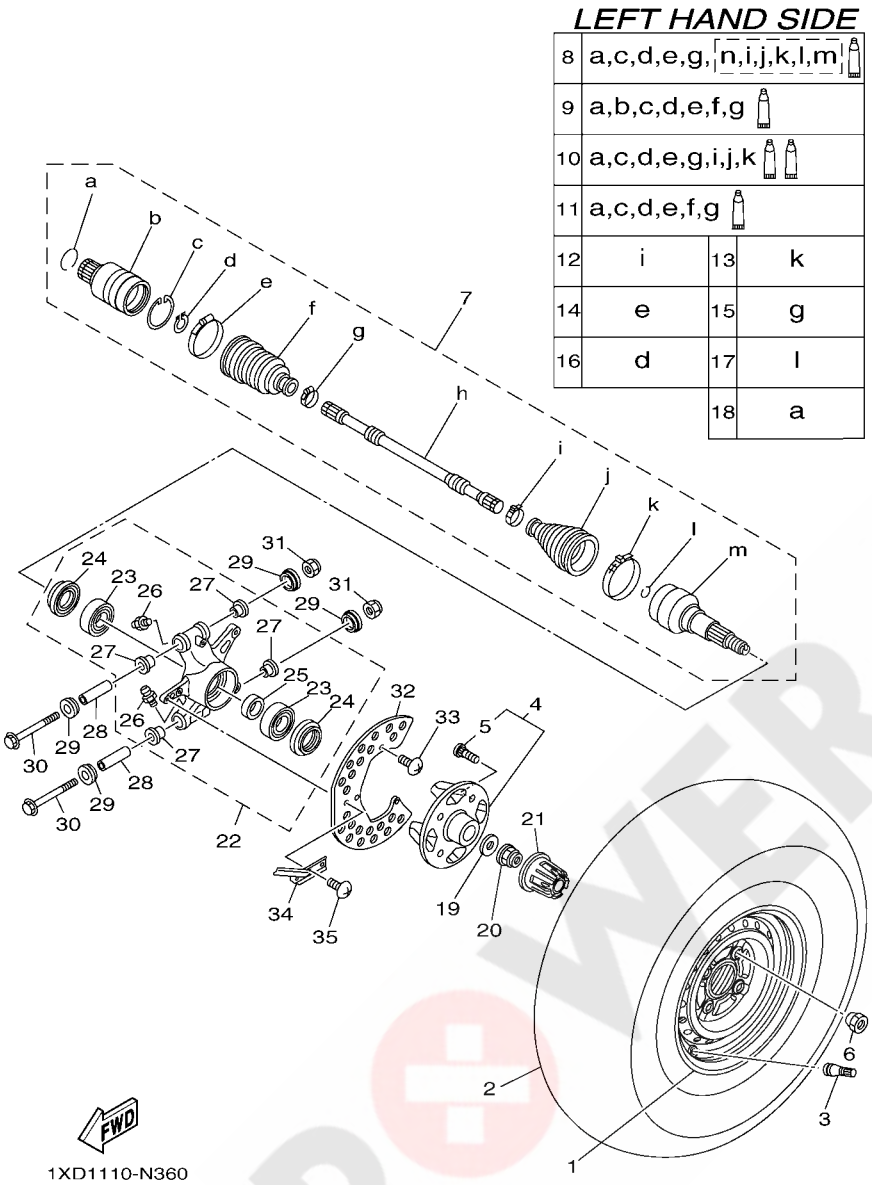

FIG. 36 REAR WHEEL

REF. NO.	PART NO.	DESCRIPTION	EUR					REMARKS
28	90387–12N54	COLLAR	2					
29	1XD–23517–00	COVER, THRUST 1	4					
30	90105–12089	BOLT, FLANGE	2					
31	90185–12010	NUT, SELF-LOCKING	2					
32	1XD–F514A–00	RING, WHEEL 1	1					
33	92012–06012	BOLT, BUTTON HEAD	2					
34	1XD–F2341–00	PLATE, GUIDE 1	1					
35	92012–06012	BOLT, BUTTON HEAD	2					

POWER PARTS By 4QUAD

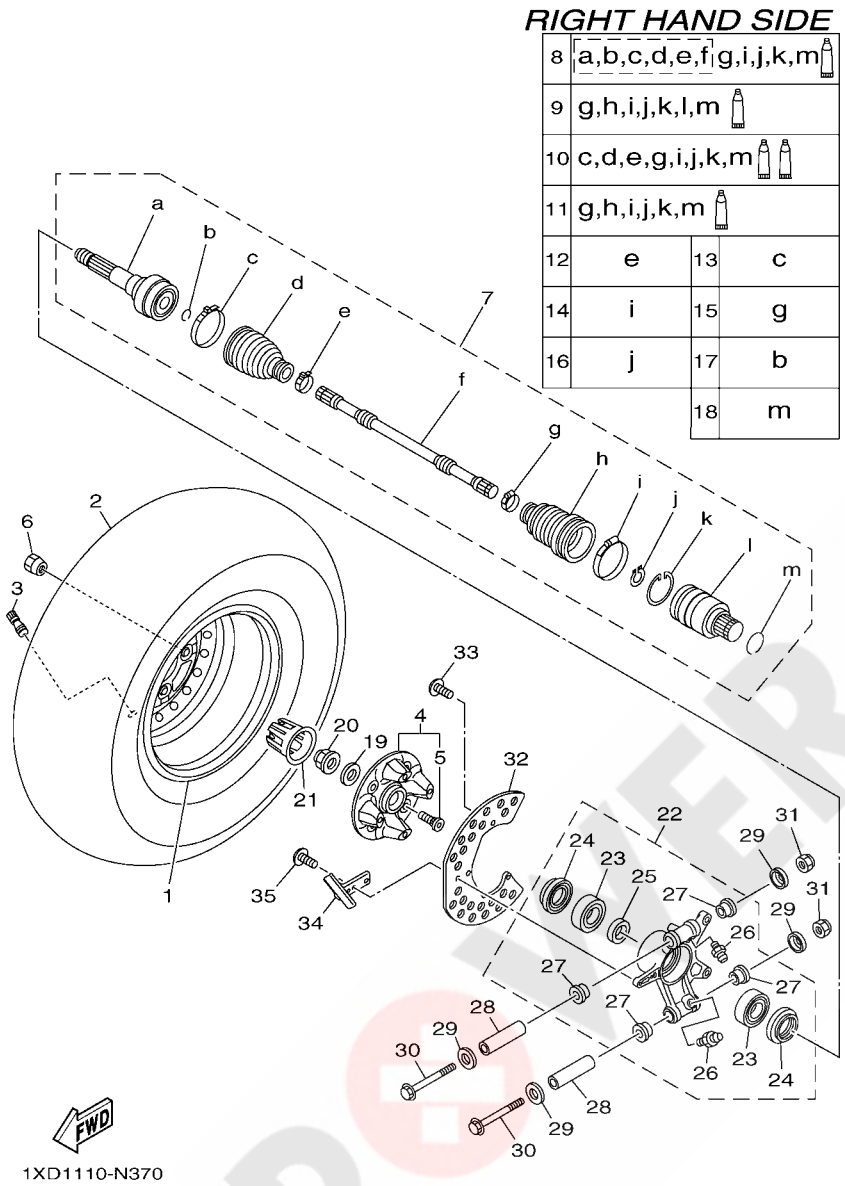

FIG. 37 REAR WHEEL 2

REF. NO.	PART NO.	DESCRIPTION	EUR					REMARKS
1	1XD–F5390–00	REAR WHEEL COMP.	1					
2	94110–12815	TIRE (25X10.00-12 MU10 4PR TL)	1					MAXXIS
3	93900–00813	VALVE, RIM (TR413)	1					MAXXIS
4	1XD–25111–00	HUB, FRONT	1					
5	90114–12002	.BOLT, SERRATION	4					
6	90179–12262	NUT	4					
7	1XD–F531H–00	REAR DRIVE SHAFT ASSY	1					
8	1XD–F530T–00	.BALL JOINT SET	1					
9	1XD–F530V–00	.DOUBLE OFF SET JOINT	1					
10	1XD–F530X–00	.BOOT SET (BALL JOINT)	1					
11	1XD–F530Y–00	.BOOT SET(DOUBLE OFFSET JOINT)	1					
12	1XD–F511H–00	.BOOT BAND(DOUBLE OFFSET JOINT)	1					
13	1XD–F511G–00	.BOOT BAND (BALL JOINT)	1					
14	1XD–F512G–00	.BOOT BAND (SMALL)	1					
15	1XD–F510U–00	.BOOT BAND (SMALL)	1					
16	1XD–F512J–00	.SNAP RING	1					
17	5UG–F512H–00	.CIRCLIP	1					
18	1XD–F536E–00	.CLIP, SPRING	1					
19	90201–25023	WASHER, PLATE	1					
20	90179–24006	NUT	1					
21	1XD–F512A–00	CAP, WHEEL	1					
22	1XD–F532F–00	REAR KNUCKLE ASSY.,2	1					
23	93306–20725	.BEARING	2					
24	93106–50002	.OIL SEAL	2					
25	90387–35007	.COLLAR	1					
26	93700–06004	.NIPPLE, GREASE	2					
27	90381–18003	.BUSH, SOLID	4					

POWER PARTS By KOUAD

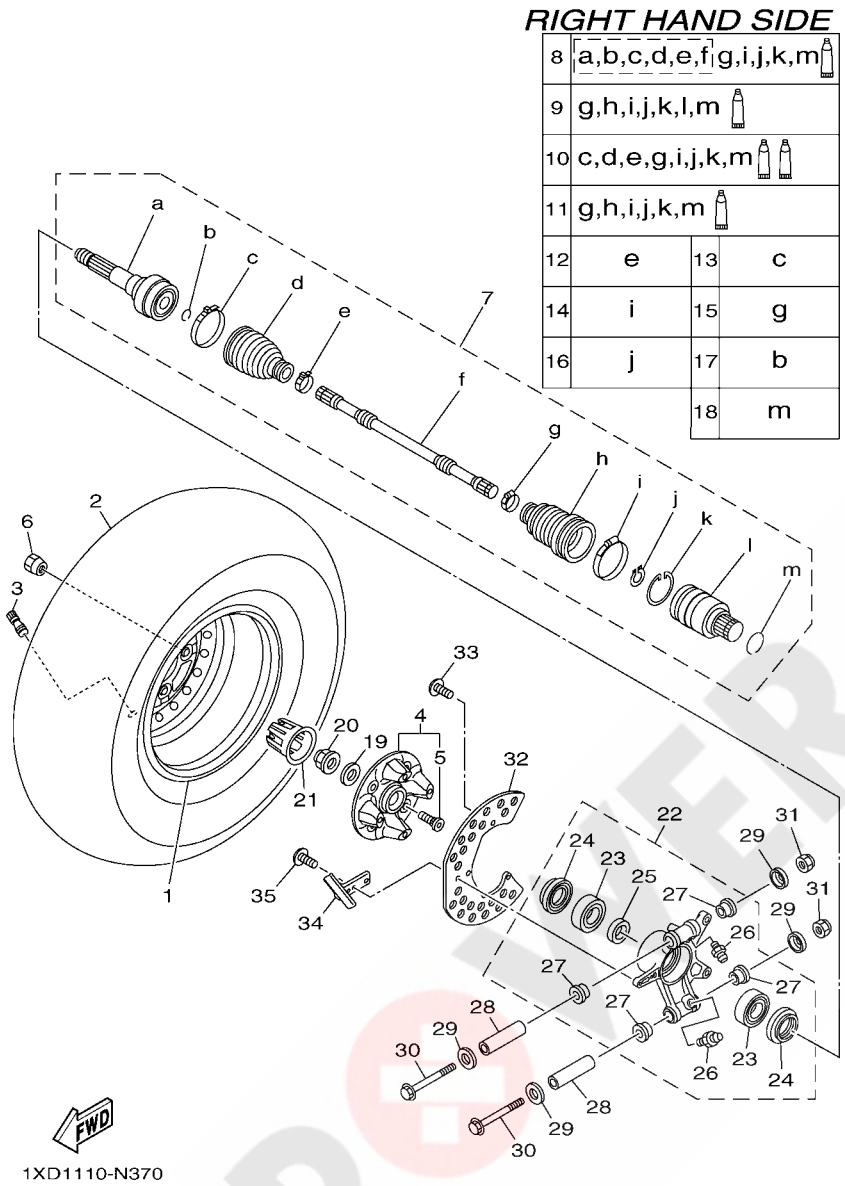

FIG. 37 REAR WHEEL 2

REF. NO.	PART NO.	DESCRIPTION	EUR					REMARKS
28	90387–12N54	COLLAR	2					
29	1XD–23517–00	COVER, THRUST 1	4					
30	90105–06012	BOLT, FLANGE	2					
31	90185–12010	NUT, SELF-LOCKING	2					
32	1XD–F514A–00	RING, WHEEL 1	1					
33	92012–06012	BOLT, BUTTON HEAD	2					
34	1XD–F2342–00	PLATE, GUIDE 2	1					
35	92012–06012	BOLT, BUTTON HEAD	2					

POWER PARTS By 4QUAD

FIG. 38 REAR BRAKE CALIPER

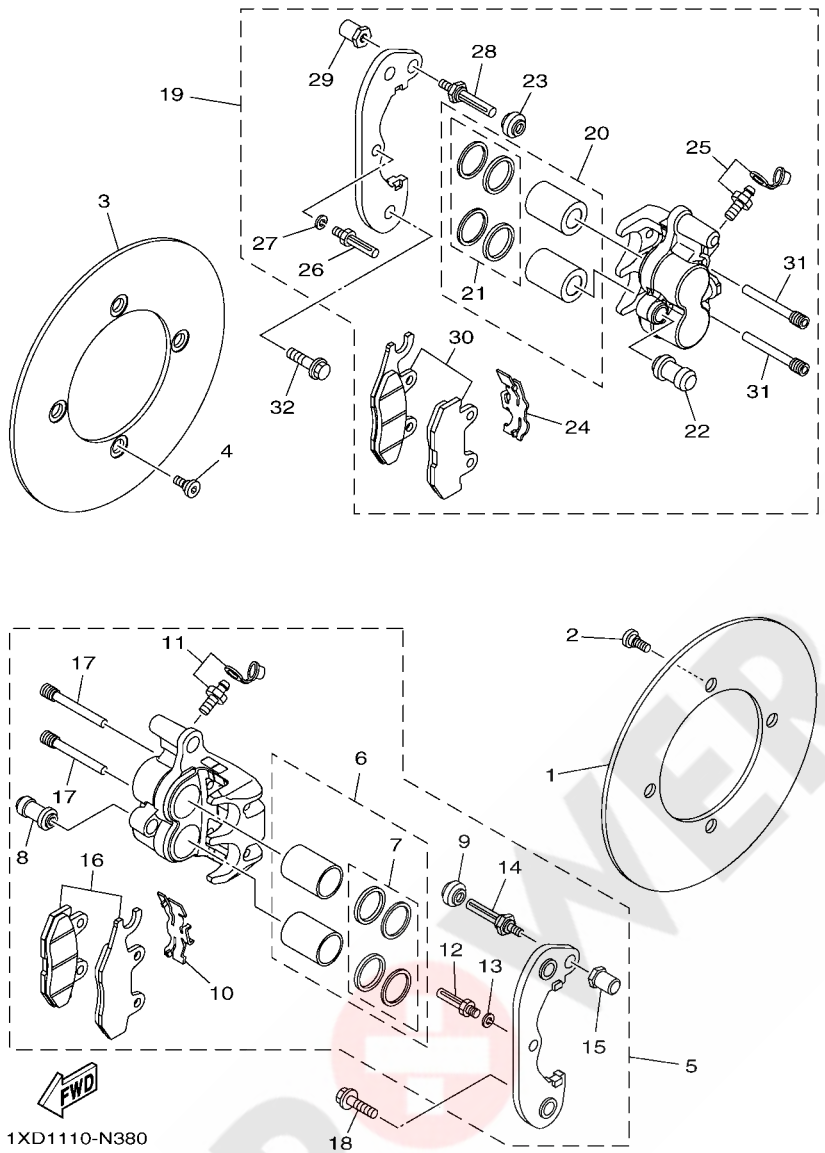

REF. NO.	PART NO.	DESCRIPTION	EUR					REMARKS
1	1XD–F582T–00	DISC, BRAKE (LEFT)	1					
2	90109–08082	BOLT	4					
3	1XD–F582T–00	DISC, BRAKE (LEFT)	1					
4	90109–08082	BOLT	4					
5	1XD–2580V–00	CALIPER ASSY, REAR 1	1					
6	3LD–25802–00	.PISTON ASSY, CALIPER	1					
7	3JD–25803–00	..CALIPER SEAL KIT	1					
8	1UY–25937–51	.BOOT 2	1					
9	3JD–25917–00	.BOOT, CALIPER	1					
10	3LD–25934–01	.SPRING, PAD	1					
11	1UY–W0048–50	.BLEED SCREW KIT	1					
12	1UY–25926–51	.BOLT	1					
13	1UY–25938–51	.WASHER, SPRING	1					
14	3JD–25926–00	.BOLT	1					
15	3JD–25961–00	.NUT	1					
16	1XD–25806–00	.BRAKE PAD KIT 2	1					
17	3LD–25924–00	.PIN, PAD	2					
18	90105–10265	BOLT, FLANGE	2					
19	1XD–2580W–00	CALIPER ASSY, REAR 2	1					
20	3LD–25802–00	.PISTON ASSY, CALIPER	1					
21	3JD–25803–00	..CALIPER SEAL KIT	1					
22	1UY–25937–51	.BOOT 2	1					
23	3JD–25917–00	.BOOT, CALIPER	1					
24	3LD–25934–01	.SPRING, PAD	1					
25	1UY–W0048–50	.BLEED SCREW KIT	1					
26	1UY–25926–51	.BOLT	1					
27	1UY–25938–51	.WASHER, SPRING	1					

POWER PARTS

FIG. 38 REAR BRAKE CALIPER

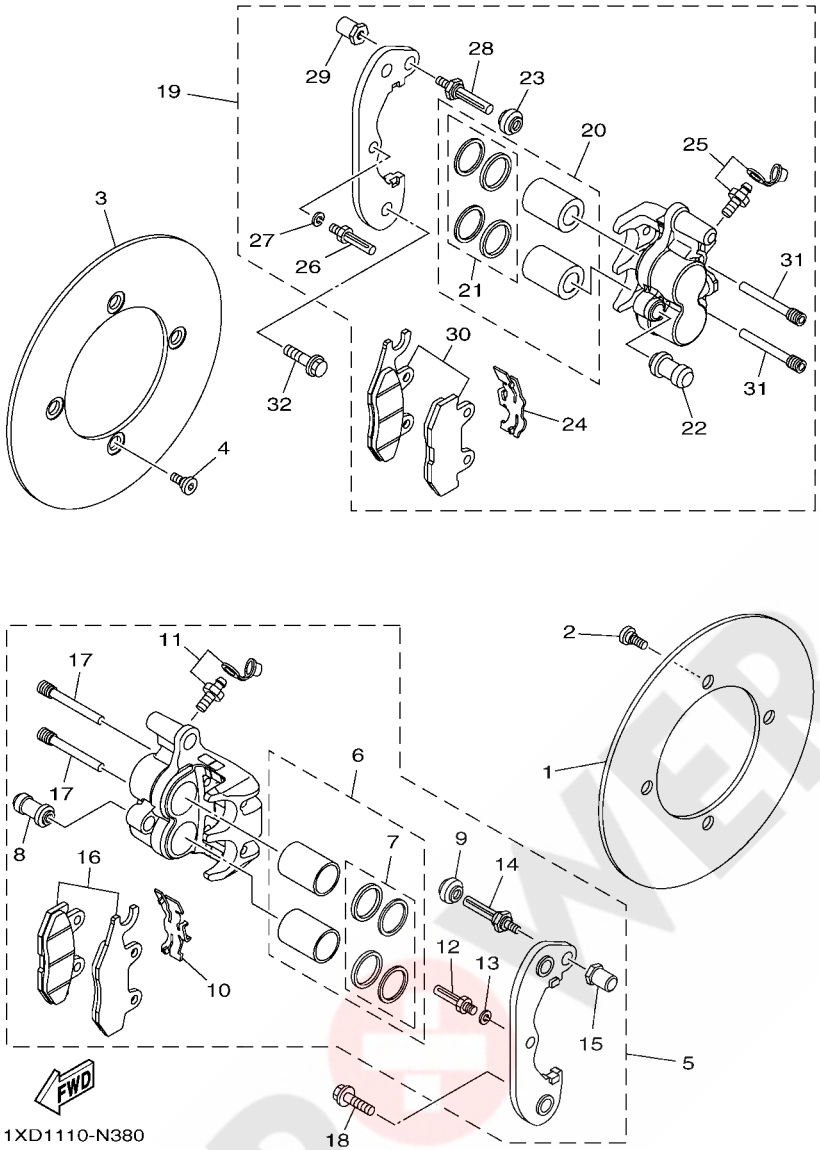

REF. NO.	PART NO.	DESCRIPTION	EUR					REMARKS
28	3JD–25926–00	.BOLT	1					
29	3JD–25961–00	.NUT	1					
30	1XD–25806–10	.BRAKE PAD KIT 2	1					
31	3LD–25924–00	.PIN, PAD	2					
32	90105–10265	BOLT, FLANGE	2					

POWER PARTS By 4xQUAD

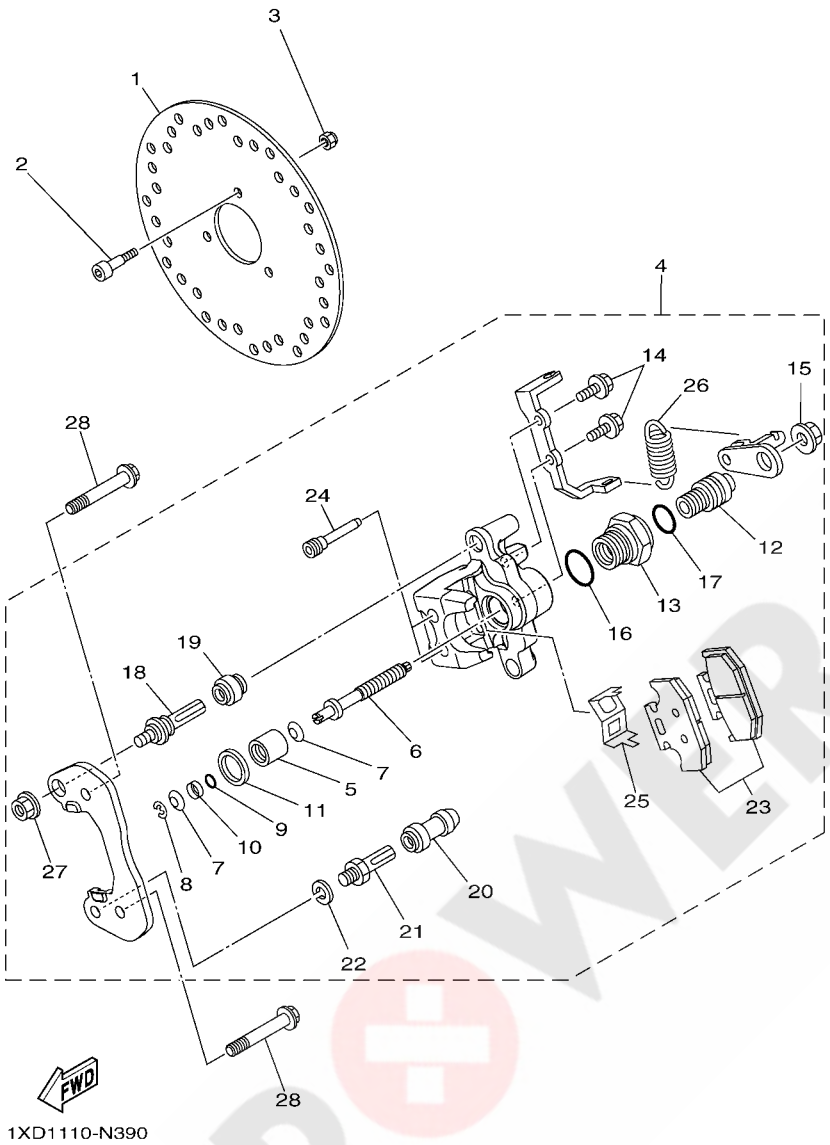

FIG. 39 REAR BRAKE CALIPER 2

REF. NO.	PART NO.	DESCRIPTION	EUR					REMARKS
1	1XD–F5711–00	DISC, BRAKE	1					
2	90110–06228	BOLT, HEXAGON SOCKET HEAD	3					
3	95612–06100	NUT, U	3					
4	1XD–25905–00	PARKING BRAKE ASSY	1					
5	5B4–25814–10	.PISTON, CALIPER	1					
6	5B4–25880–00	.PUSH ROD COMP.	1					
7	5B4–2581R–00	.WASHER, CONICAL SPRING	2					
8	5B4–25415–00	.CIRCLIP	1					
9	5B4–25976–00	.O-RING	1					
10	5B4–25913–00	.RETAINER	1					
11	5B4–25975–00	.RUBBER, BUSHING	1					
12	5B4–25978–00	.SHAFT L	1					
13	5B4–25973–00	.NUT	1					
14	5B4–25833–00	.BOLT, FITTING	2					
15	1UY–25973–51	.NUT	1					
16	5B4–25976–10	.O-RING	1					
17	5B4–25976–20	.O-RING	1					
18	3JD–25926–00	.BOLT	1					
19	3JD–25917–00	.BOOT, CALIPER	1					
20	1UY–25937–51	.BOOT 2	1					
21	1UY–25926–51	.BOLT	1					
22	1UY–25938–51	.WASHER, SPRING	1					
23	5B4–25806–00	.BRAKE PAD KIT 2	1					
24	5B4–25924–00	.PIN, PAD	2					
25	5B4–25919–00	.SUPPORT, PAD	1					
26	5B4–25977–00	.SPRING, RETURN	1					
27	5B4–2585F–00	.NUT	1					

POWER PARTS By 4WDUAD

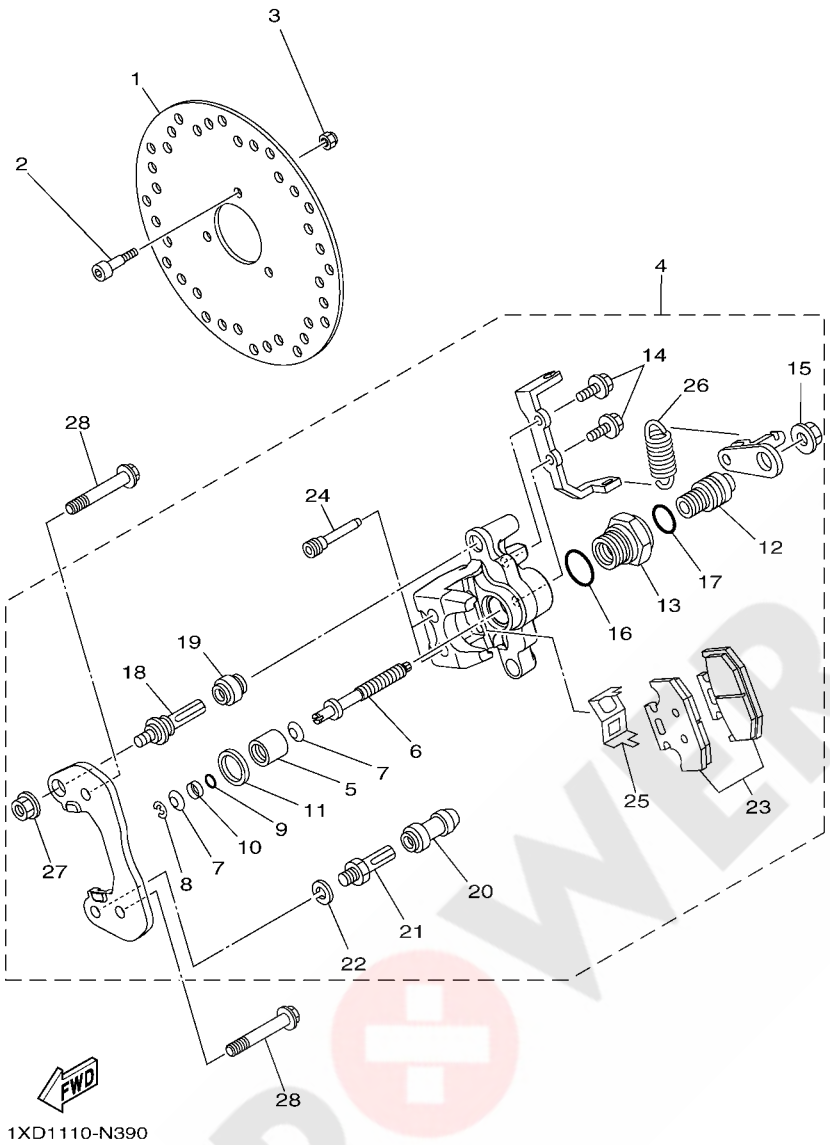

FIG. 39 REAR BRAKE CALIPER 2

REF. NO.	PART NO.	DESCRIPTION	EUR					REMARKS
28	90105–10402	BOLT, FLANGE	2					

POWER PARTS By 4xQUAD

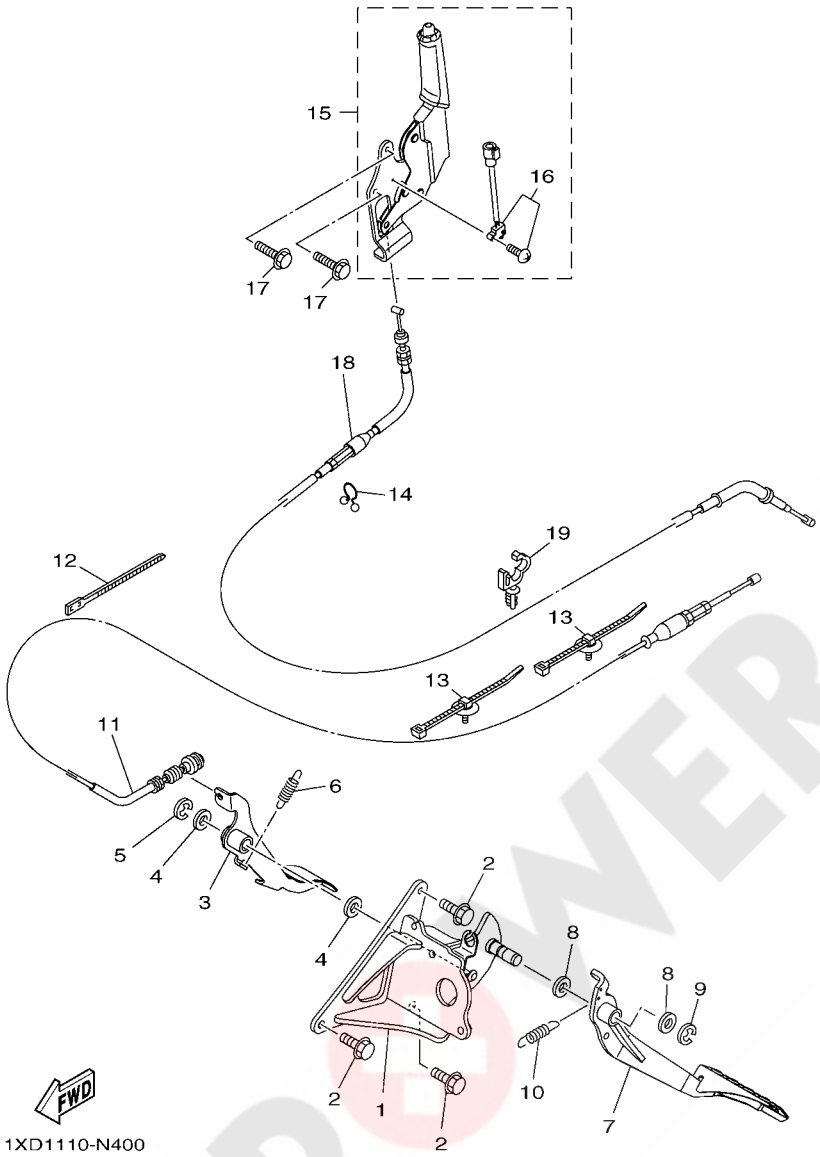

FIG. 40 PEDAL WIRE

REF. NO.	PART NO.	DESCRIPTION	EUR					REMARKS
1	1XD–F2548–00	BRACKET, PEDAL SUPPORT	1					
2	95812–08016	BOLT, FLANGE	3					
3	1XD–F7801–00	ACCEL PEDAL ASSY	1					
4	90201–15018	WASHER, PLATE	2					
5	93430–12008	CIRCLIP	1					
6	90506–20192	SPRING, TENSION	1					
7	1XD–F7200–00	PEDAL, BRAKE	1					
8	90201–15018	WASHER, PLATE	2					
9	93430–12008	CIRCLIP	1					
10	90506–20192	SPRING, TENSION	1					
11	1XD–26311–00	CABLE, THROTTLE 1	1					
12	90464–40825	CLAMP	1					
13	5B4–F1338–00	CLAMP	2					
14	90464–20804	CLAMP	1					
15	1XD–F5690–00	PARKING LEVER ASSY	1					
16	5UG–H251S–00	.SWITCH COMP.	1					
17	95812–06012	BOLT, FLANGE	2					
18	1XD–26341–00	WIRE, BRAKE 1	1					
19	90464–12830	CLAMP	1					d: 12mm

POWER PARTS
By 4WDUAD

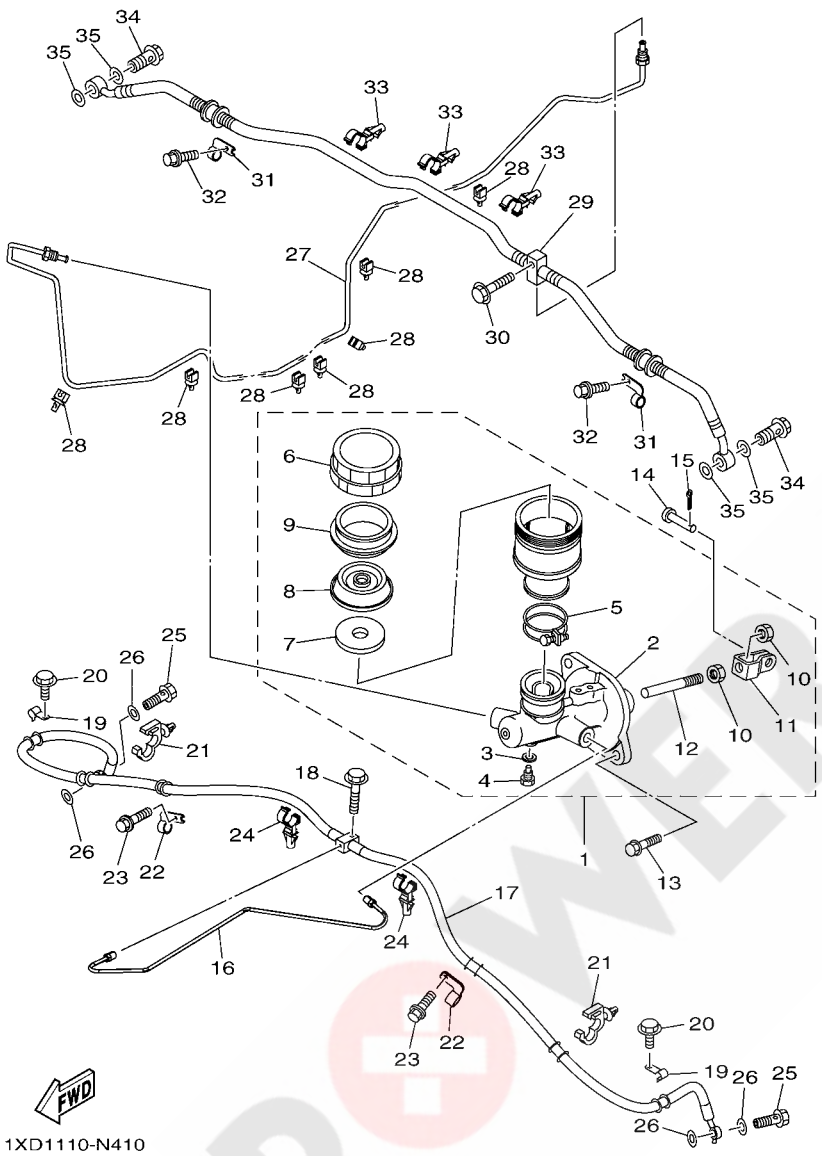

FIG. 41 MASTER CYLINDER

REF. NO.	PART NO.	DESCRIPTION	EUR					REMARKS
1	5B4–2583T–00	MASTER CYLINDER ASSY	1					
2	5UG–W0042–00	.CYLINDER KIT, MASTER	1					
3	5UG–25878–00	.WASHER, OIL BOLT	1					
4	5UG–25877–00	.BOLT, OIL 1	1					
5	5UG–25719–00	.BAND	1					
6	5UG–25852–00	.CAP, RESERVOIR	1					
7	5UG–25853–00	.FLOAT, RESERVOIR	1					
8	5UG–25854–00	.DIAPHRAGM, RESERVOIR	1					
9	5UG–25855–00	.BUSH,DIAPHRAGM	1					
10	4SS–27218–00	.NUT	2					
11	2YK–27222–00	.JOINT	1					
12	5UG–25880–00	.PUSH ROD COMP.	1					
13	90105–08129	BOLT, FLANGE	2					
14	90240–08005	PIN, CLEVIS	1					
15	91402–20020	PIN, COTTER	1					
16	1XD–F5882–00	PIPE, BRAKE 2	1					
17	1XD–F5872–00	HOSE, BRAKE 1	1					
18	95812–06025	BOLT, FLANGE	1					
19	5KM–25875–00	HOLDER, BRAKE HOSE 1	2					
20	95812–06010	BOLT, FLANGE	2					
21	90464–18002	CLAMP	2					
22	3B4–25876–10	HOLDER, BRAKE HOSE 2	2					
23	95812–06010	BOLT, FLANGE	2					
24	90464–16012	CLAMP	2					
25	90401–10015	BOLT, UNION	2					
26	90201–10118	WASHER, PLATE	4					
27	1XD–F5871–00	PIPE, BRAKE	1					

POWER PARTS By SQUAD

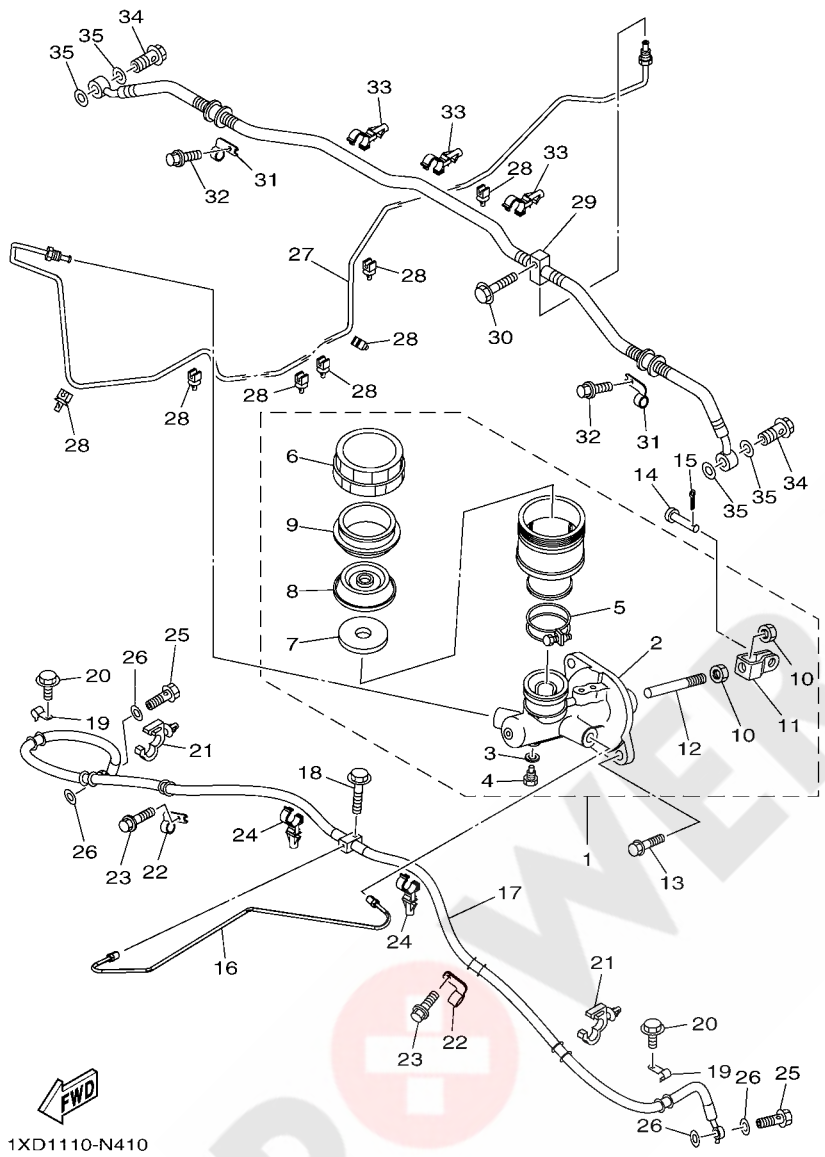

FIG. 41 MASTER CYLINDER

REF. NO.	PART NO.	DESCRIPTION	EUR					REMARKS
28	5KM–81677–00	CLAMP 1	7					
29	1XD–F5873–00	HOSE, BRAKE 2	1					
30	90105–06833	BOLT, FLANGE	1					
31	3B4–25876–10	HOLDER, BRAKE HOSE 2	2					
32	95812–06010	BOLT, FLANGE	2					
33	90464–16012	CLAMP	3					
34	90401–10015	BOLT, UNION	2					
35	90201–10118	WASHER, PLATE	4					

POWER PARTS By 4xQUAD

FIG. 42 STAND & FOOTREST

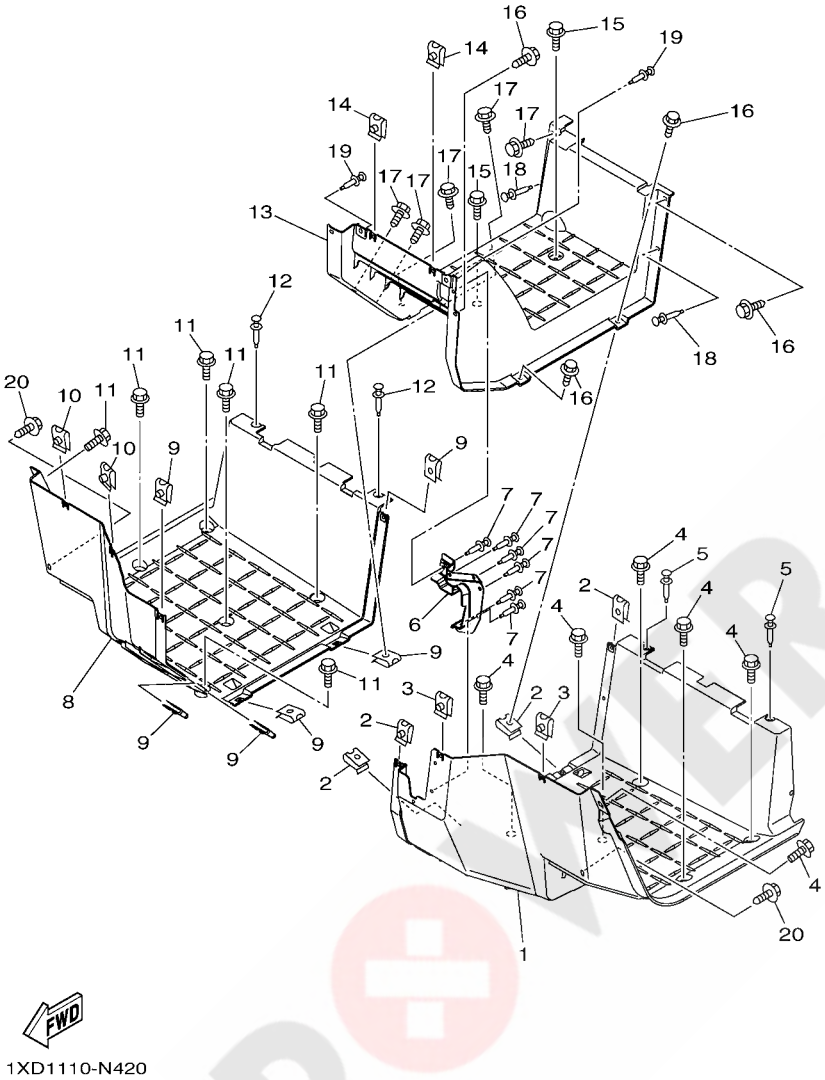

REF. NO.	PART NO.	DESCRIPTION	EUR					REMARKS
1	1XD–F7411–00	FOOTREST 1	1					
2	90183–060A6	NUT, SPRING	4					
3	90183–060A6	NUT, SPRING	2					
4	JW1–K6179–01	BOLT, SPECIAL 1	6					
5	90269–07803	RIVET	2					
6	1XD–F7286–00	COVER, DUST	1					
7	90269–07803	RIVET	6					
8	1XD–F7421–00	FOOTREST 2	1					
9	90183–060A6	NUT, SPRING	6					
10	90183–060A6	NUT, SPRING	2					
11	JW1–K6179–01	BOLT, SPECIAL 1	6					
12	90269–07803	RIVET	2					
13	1XD–F7413–00	COVER, FOOTREST	1					
14	90183–060A6	NUT, SPRING	2					
15	JW1–K6179–01	BOLT, SPECIAL 1	2					
16	90119–06226	BOLT, WITH WASHER	4					
17	90119–06226	BOLT, WITH WASHER	5					
18	90269–07803	RIVET	2					
19	90269–07803	RIVET	2					
20	90119–06226	BOLT, WITH WASHER	2					

POWER PARTS By 4xQUAD

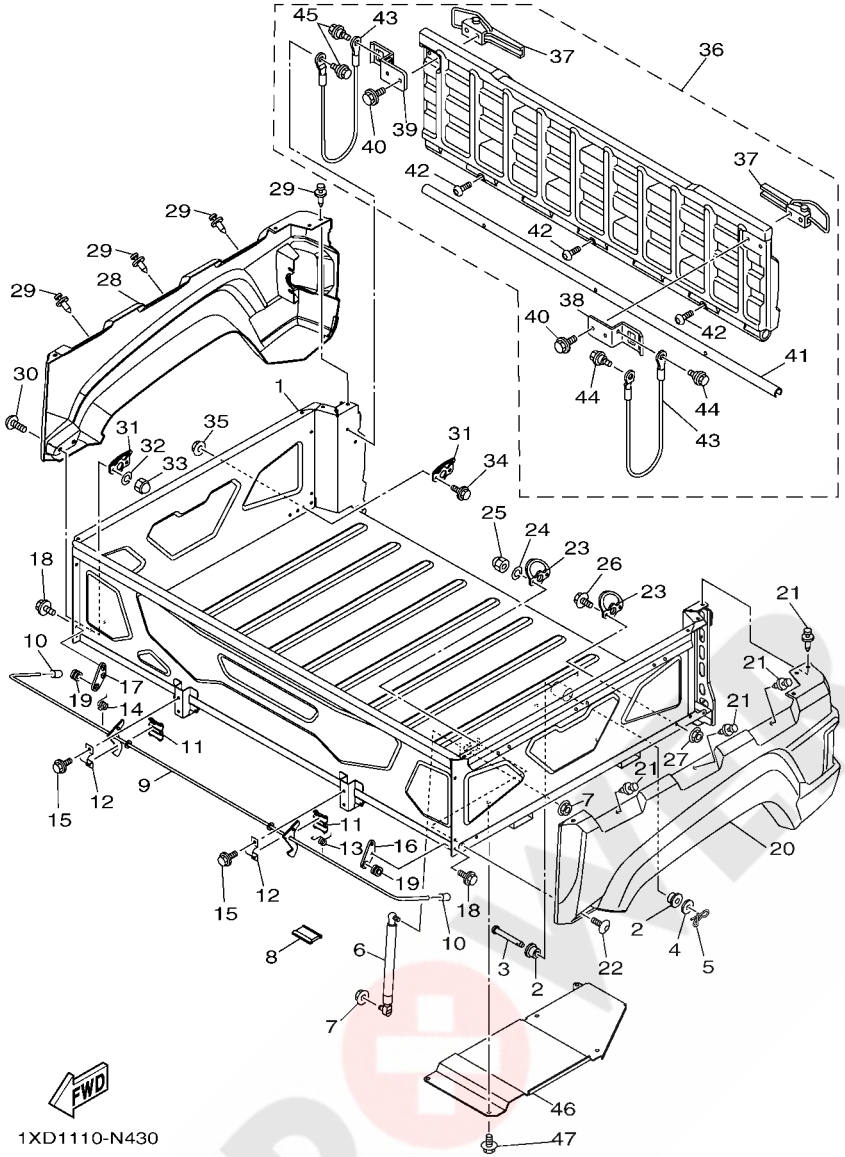

FIG. 43 CARRIER

REF. NO.	PART NO.	DESCRIPTION	EUR					REMARKS
1	1XD–F4850–00	CARRIER BOX ASSY	1					
2	JW6–F2123–00	BUSH 1	4					
3	1XD–F7827–00	PIN, TAPER	2					
4	90201–133E5	WASHER, PLATE	2					
5	90468–16191	CLIP	2					
6	1XD–F8415–00	DAMPER 1	1					
7	95602–08200	NUT, SELF-LOCKING	2					
8	1XD–F113B–11	DAMPER	2					
9	1XD–K7180–00	LATCH ASSY	1					
10	5UG–K818M–00	CAP, PROTECTOR END 4	2					
11	1XD–F4571–00	BUSHING	2					
12	1XD–F839N–00	HOLDER	2					
13	1XD–F4758–00	SPRING	1					
14	1XD–F4758–10	SPRING	1					
15	95812–06010	BOLT, FLANGE	4					
16	1XD–F849N–00	BRACKET, TRUNK LOCK	1					
17	1XD–F849N–10	BRACKET, TRUNK LOCK	1					
18	95812–06010	BOLT, FLANGE	4					
19	90480–15235	GROMMET	2					
20	1XD–K8191–20	PANEL, REAR FENDER 1	1					UR FOR RTR
	1XD–K8191–00	PANEL, REAR FENDER 1	1					UR FOR PDG
21	90269–07803	RIVET	8					
22	90111–06814	BOLT,HEX. SOCKET BUTTON	2					
23	5UG–F4867–00	HOOK	2					
24	92902–06100	WASHER, SPRING	2					
25	95302–06800	NUT, CROWN	2					
26	95812–06016	BOLT, FLANGE	2					

POWER PARTS BY KQUAD

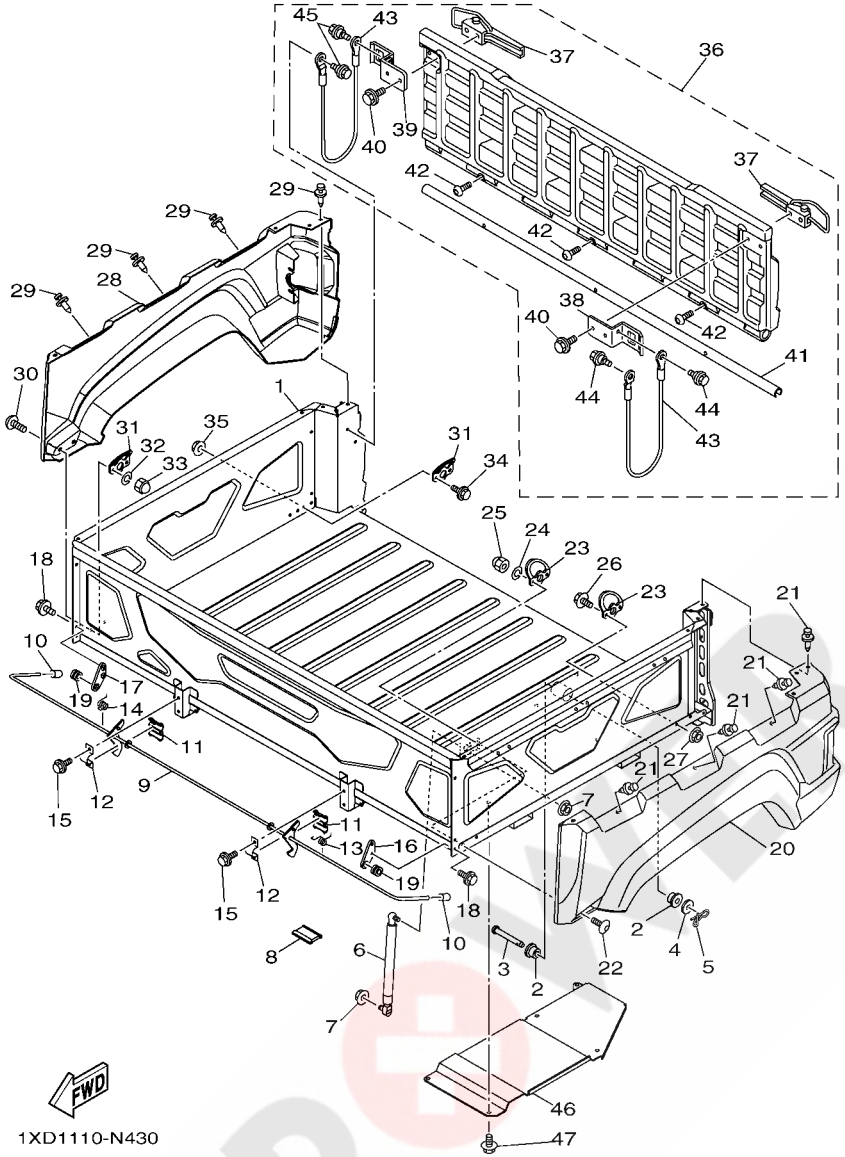

FIG. 43 CARRIER

REF. NO.	PART NO.	DESCRIPTION	EUR					REMARKS
27	95602–06200	NUT, SELF-LOCKING	2					
28	1XD–K8192–20	PANEL, REAR FENDER 2	1					UR FOR RTR
	1XD–K8192–00	PANEL, REAR FENDER 2	1					UR FOR PDG
29	90269–07803	RIVET	8					
30	90111–06814	BOLT,HEX. SOCKET BUTTON	2					
31	5UG–F4867–00	HOOK	2					
32	92902–06100	WASHER, SPRING	2					
33	95302–06800	NUT, CROWN	2					
34	95812–06016	BOLT, FLANGE	2					
35	95602–06200	NUT, SELF-LOCKING	2					
36	1XD–K810N–00	REAR STORAGE LID COMP.	1					
37	5UG–F389E–00	.LATCH	2					
38	1XD–F83D1–00	.STOPPER 1	1					
39	1XD–F83D2–00	.STOPPER 2	1					
40	95812–06035	.BOLT, FLANGE	4					
41	1XD–F463F–00	.HINGE 2	1					
42	90149–06846	.SCREW	3					
43	5UG–K7195–10	HOLDER, CABLE	2					
44	90109–06212	BOLT	2					
45	90109–06212	BOLT	2					
46	1XD–F2891–00	INSULATOR, MOUNTING	1					
47	90105–06831	BOLT, FLANGE	5					

PowerPARTS By KOMAD

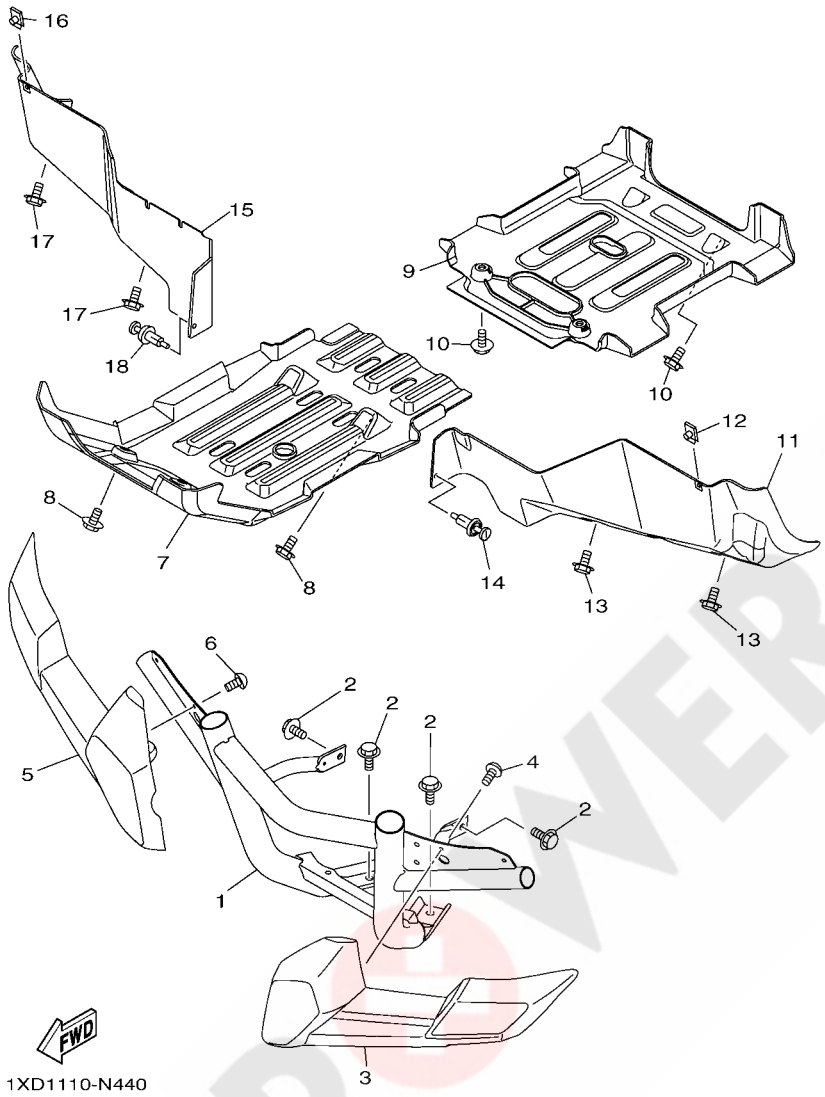

FIG. 44 GUARD

REF. NO.	PART NO.	DESCRIPTION	EUR					REMARKS
1	1XD–F845N–00	BAR, CARRY FRONT	1					
2	95812–10016	BOLT, FLANGE	4					
3	1XD–F842M–00	COVER 1	1					
4	90167–06800	SCREW, TAPPING	2					
5	1XD–F842N–00	COVER 2	1					
6	90167–06800	SCREW, TAPPING	2					
7	1XD–F8385–00	COVER, UNDER	1					
8	90109–06202	BOLT	4					
9	1XD–F8395–00	COVER, UNDER 2	1					
10	90109–06202	BOLT	4					
11	1XD–F2361–00	GUARD 1	1					
12	90183–060A6	NUT, SPRING	1					
13	90109–06202	BOLT	2					
14	90269–06800	RIVET	1					
15	1XD–F2362–00	GUARD 2	1					
16	90183–060A6	NUT, SPRING	1					
17	90109–06202	BOLT	2					
18	90269–06800	RIVET	1					

POWER PARTS By ATVQUAD

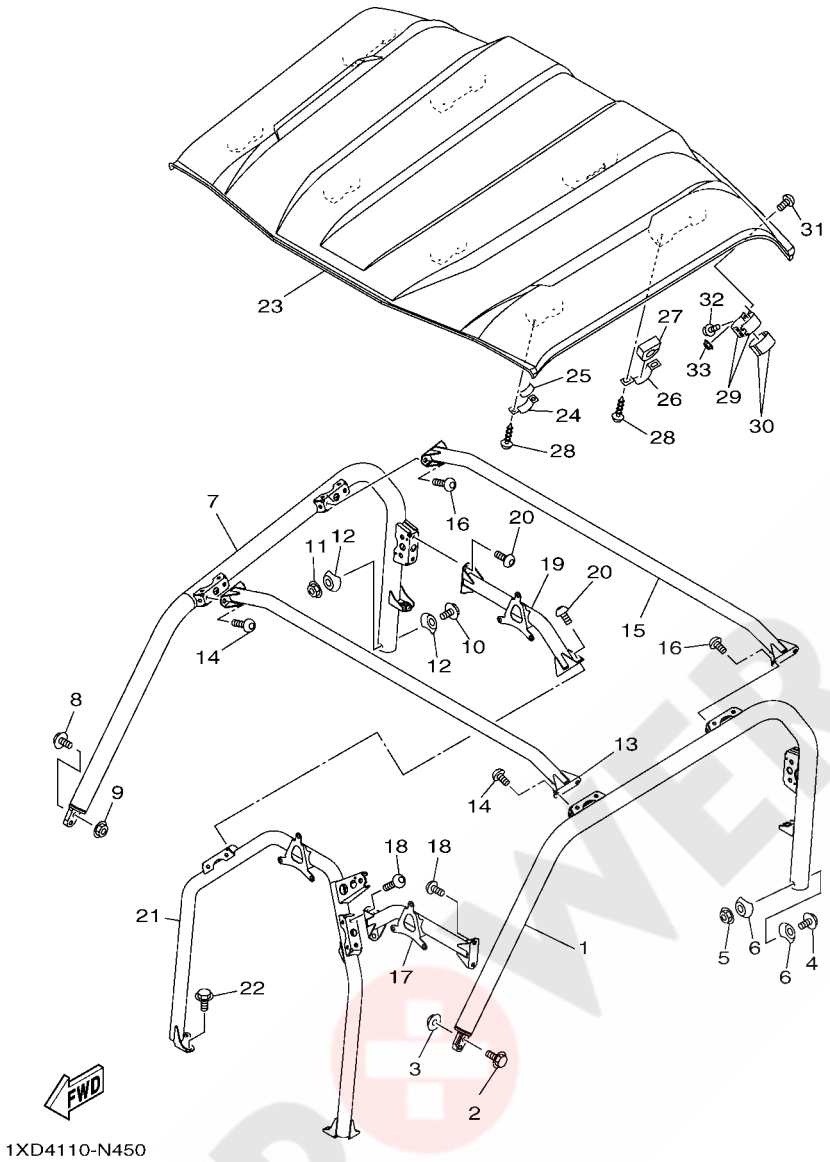

FIG. 45 GUARD 2

REF. NO.	PART NO.	DESCRIPTION	EUR					REMARKS
1	1XD–K831A–00	SUPPORT, ROOF 3	1					
2	95812–10045	BOLT, FLANGE	2					
3	90185–10011	NUT, SELF-LOCKING	2					
4	92012–10070	BOLT, BUTTON HEAD	1					
5	90185–10011	NUT, SELF-LOCKING	1					
6	1XD–K7526–00	WASHER 2	2					
7	1XD–K831E–00	SUPPORT, ROOF 4	1					
8	95812–10045	BOLT, FLANGE	2					
9	90185–10011	NUT, SELF-LOCKING	2					
10	92012–10070	BOLT, BUTTON HEAD	1					
11	90185–10011	NUT, SELF-LOCKING	1					
12	1XD–K7526–00	WASHER 2	2					
13	1XD–K8392–00	MEMBER, ROOF FRAME	1					
14	90111–10802	BOLT,HEX. SOCKET BUTTON	4					
15	1XD–K8393–00	MEMBER, ROOF FRAME 2	1					
16	90111–10802	BOLT,HEX. SOCKET BUTTON	4					
17	1XD–K830A–00	ROOF SUPPORT ASSY 1	1					
18	90111–10802	BOLT,HEX. SOCKET BUTTON	4					
19	1XD–K830B–00	ROOF SUPPORT ASSY 2	1					
20	90111–10802	BOLT,HEX. SOCKET BUTTON	4					
21	1XD–K830C–00	ROOF SUPPORT ASSY 3	1					
22	95812–10016	BOLT, FLANGE	4					
23	1XP–K8314–00	COVER, SUN ROOF	1					
24	5UG–K8366–00	CLAMP, SUPPORT	4					
25	5UG–K7588–00	DAMPER	4					
26	1XP–K8366–00	CLAMP, SUPPORT	4					
27	1XP–K7588–00	DAMPER	4					

POWER PARTS By KOUAD

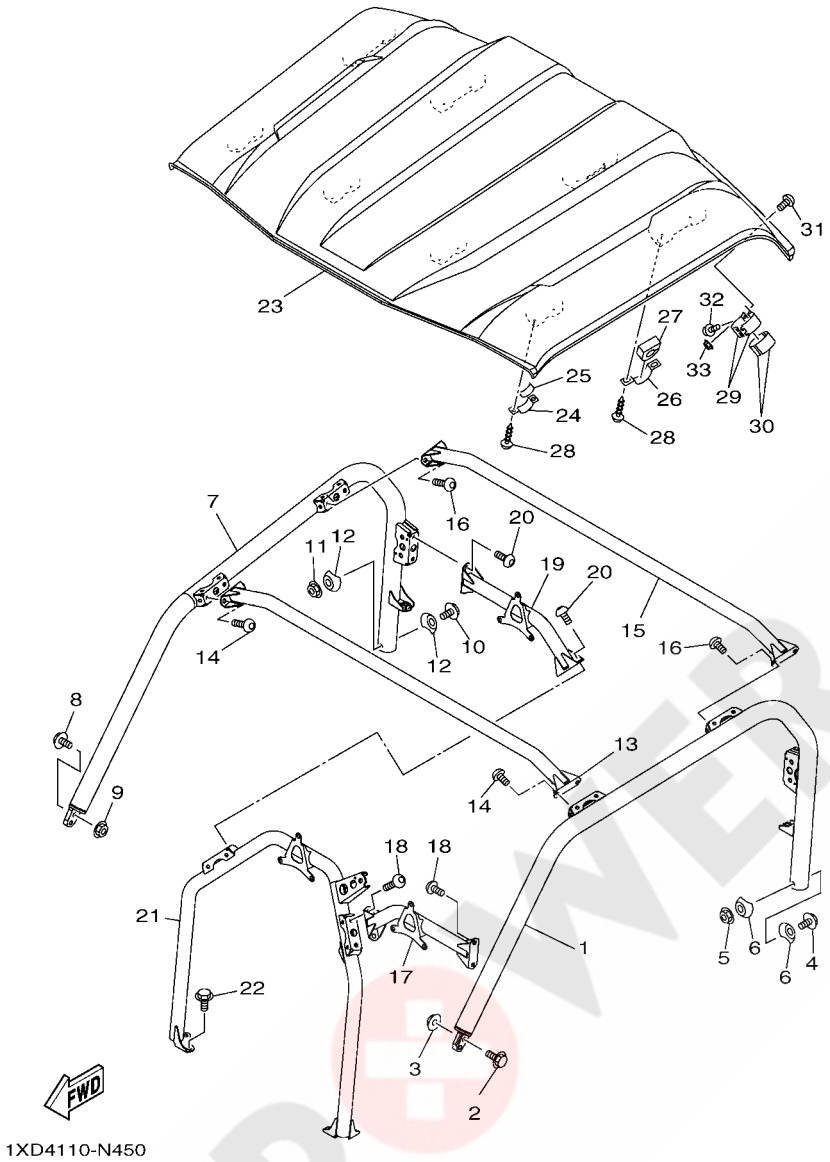

FIG. 45 GUARD 2

REF. NO.	PART NO.	DESCRIPTION	EUR					REMARKS
28	90167–06800	SCREW, TAPPING	16					
29	1XP–F481H–00	CLAMP	2					
30	5UG–K7588–00	DAMPER	4					
31	90111–06814	BOLT,HEX. SOCKET BUTTON	4					
32	9582P–06012	BOLT, FLANGE	4					
33	9560P–06200	NUT, FLANGE	4					

POWER PARTS By 4xQUAD

FIG. 46 GENERATOR

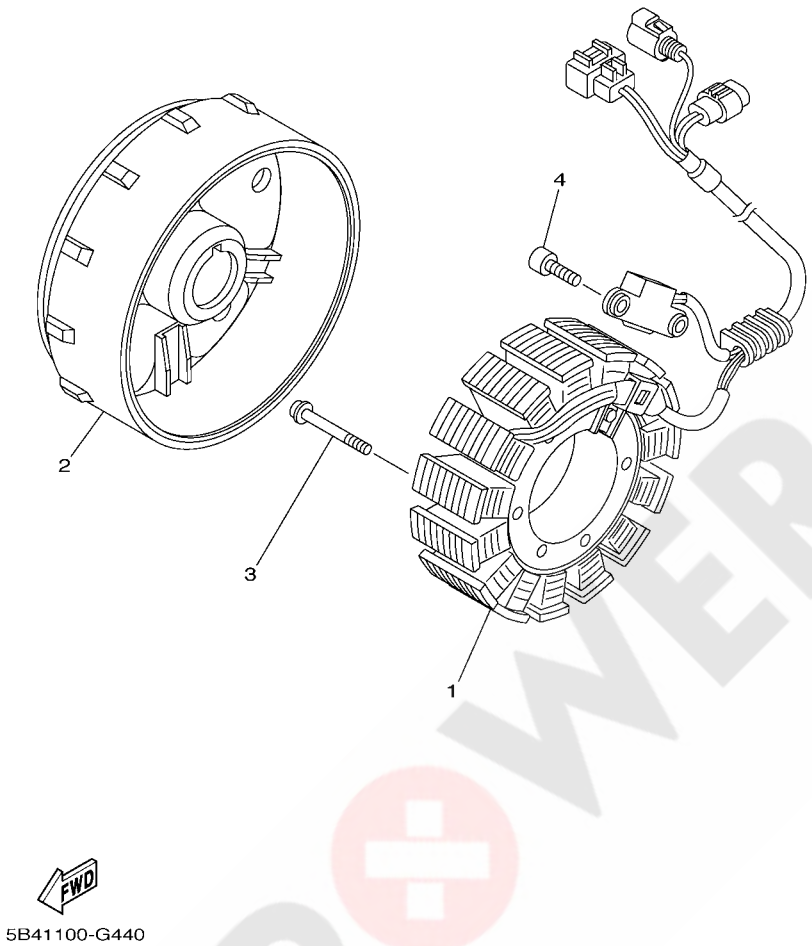

REF. NO.	PART NO.	DESCRIPTION	EUR					REMARKS
1	1XD–81410–00	STATOR ASSY	1					
2	28P–81450–01	ROTOR ASSY	1					
3	92012–06030	BOLT, BUTTON HEAD	3					
4	91312–05014	BOLT	2					

POWER PARTS By 4xQUAD

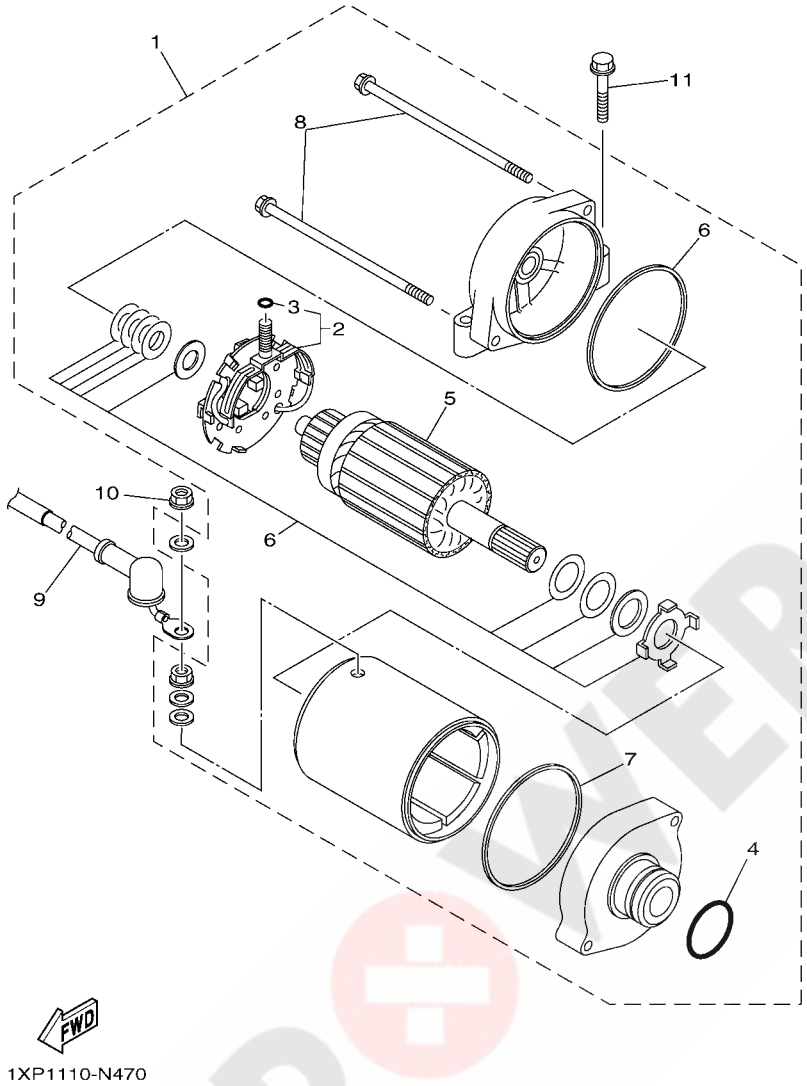

FIG. 47 STARTING MOTOR

REF. NO.	PART NO.	DESCRIPTION	EUR					REMARKS
1	1S3–81890–00	MOTOR ASSY	1					
2	3AJ–81801–00	.BRUSH SET	1					
3	3TB–81847–00	..O-RING	1					
4	1FK–81847–00	.O-RING	1					
5	4NK–81850–00	.ARMATURE ASSY	1					
6	3KS–81809–00	.WASHER KIT	1					
7	11H–81844–00	.GASKET	2					
8	3AJ–81826–00	.BOLT	2					
9	1XD–H1815–00	CORD, STARTER MOTOR	1					
10	4XV–8182A–00	NUT	1					
11	95022–06030	BOLT, FLANGE	2					

POWER PARTS By axquad

FIG. 48 METER

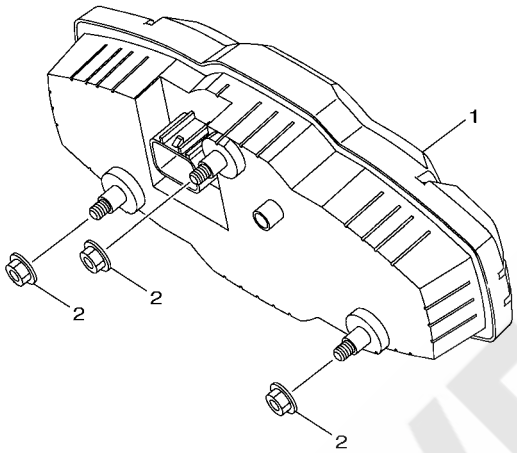

1XD1110-N480

REF. NO.	PART NO.	DESCRIPTION	EUR					REMARKS
1	1XP–83500–00	METER ASSY	1					
2	95702–05500	NUT, FLANGE	3					

POWER PARTS By 4xQUAD

FIG. 49 HEADLIGHT

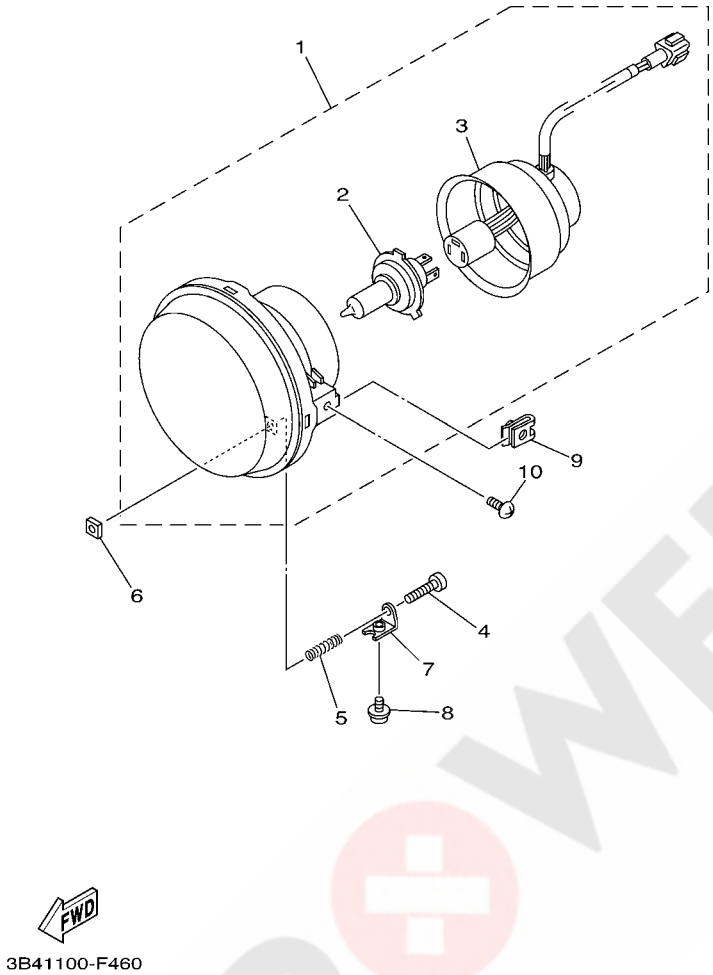

REF. NO.	PART NO.	DESCRIPTION	EUR					REMARKS
1	28P–84300–00	HEADLIGHT ASSY	2					
2	28P–84314–00	.BULB, HEADLIGHT (12V 35/35W)	1					
3	3B4–84340–00	.SOCKET CORD ASSY 1	1					
4	98502–03530	SCREW, PAN HEAD	2					
5	90501–05764	SPRING, COMPRESSION	2					
6	2GU–84334–00	NUT, ADJUSTING	2					
7	5GH–84703–10	BRACKET	2					
8	90159–05044	SCREW, WITH WASHER	2					
9	90183–05008	NUT, SPRING	4					
10	90154–05021	SCREW, BINDING	4					

POWER PARTS By 4xQUAD

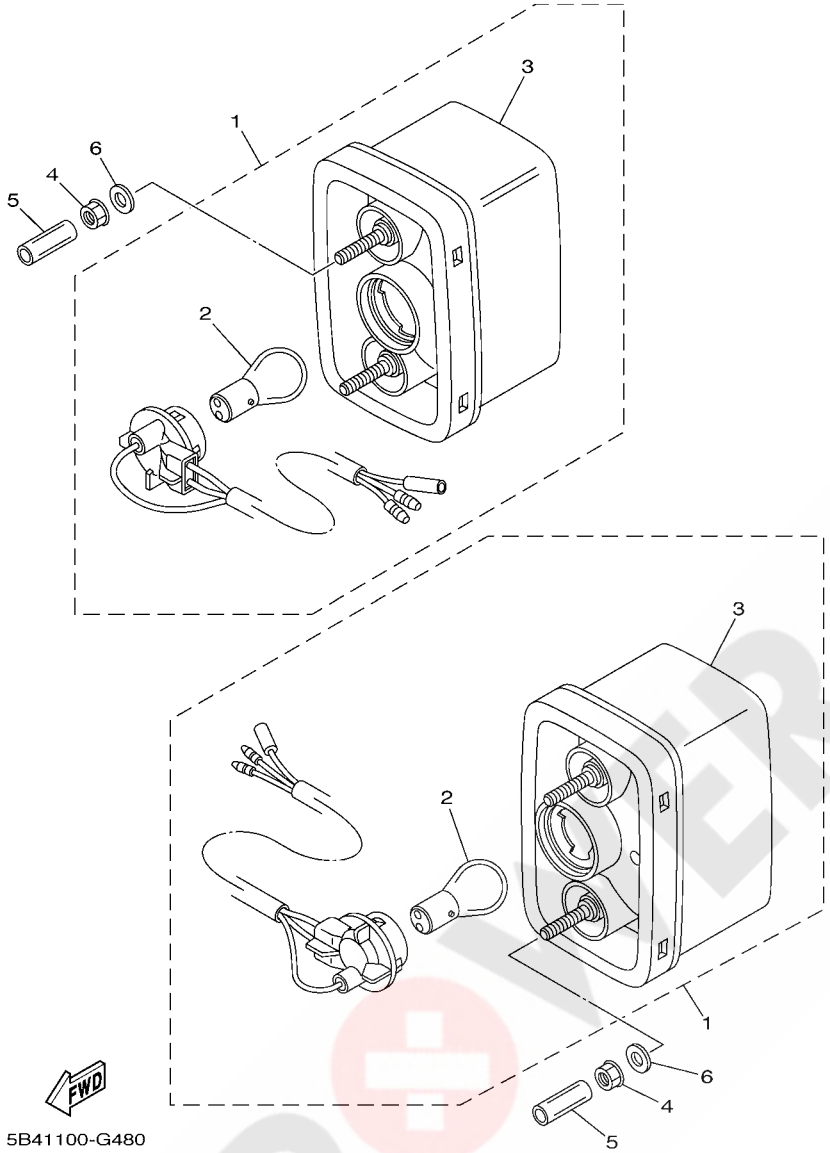

FIG. 50 TAILLIGHT

REF. NO.	PART NO.	DESCRIPTION	EUR					REMARKS
1	5KM–84710–00	TAILLIGHT UNIT ASSY	2					
2	1A2–84714–41	.BULB (12V-21/5W)	1					
3	5KM–8472C–10	.LENS, TAILLIGHT	1					
4	95702–06300	NUT, NYLON	4					
5	90445–09220	HOSE (L30)	4					
6	90201–06081	WASHER, PLATE	4					

POWER PARTS By 4xQUAD

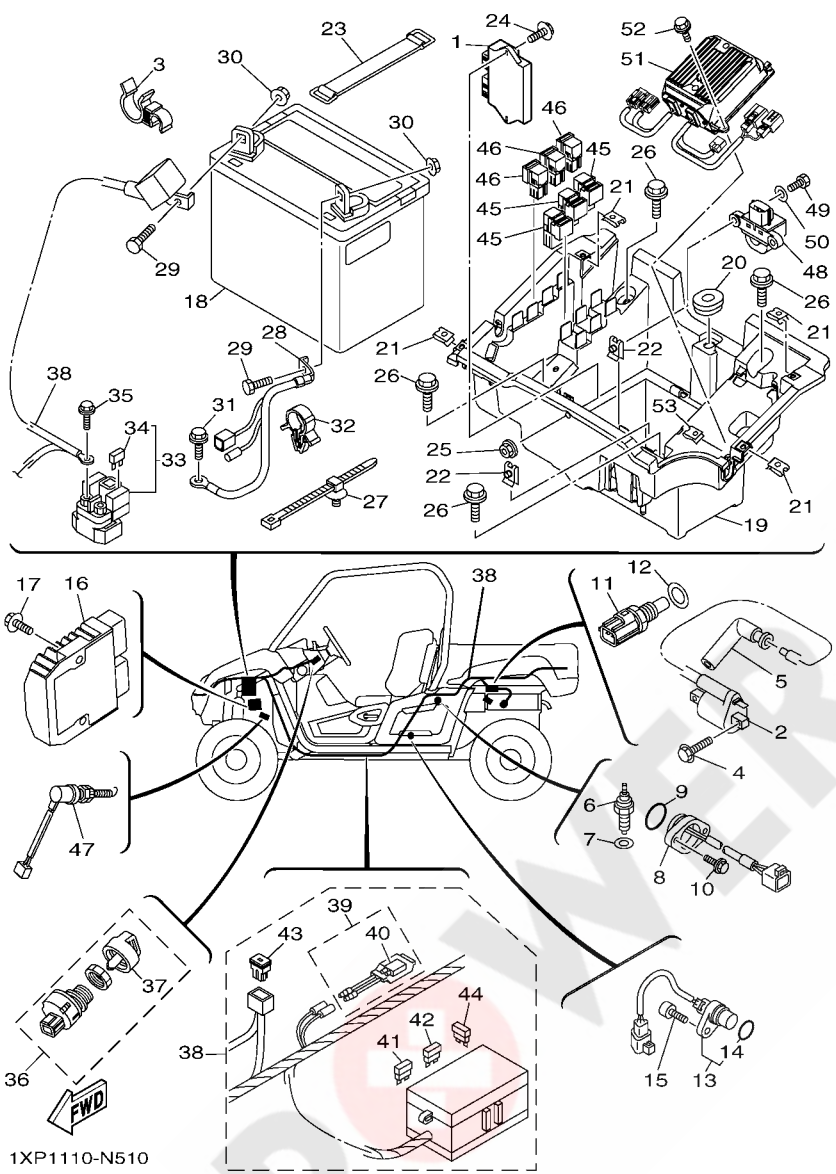

FIG. 51 ELECTRICAL 1

REF. NO.	PART NO.	DESCRIPTION	EUR					REMARKS
1	1XD–8591A–00	ENGINE CONTROL UNIT ASSY	1					
2	5YU–82310–10	IGNITION COIL ASSY	1					
3	90464–18016	CLAMP	2					
4	97002–06016	BOLT	2					
5	5B4–82370–00	PLUG CAP ASSY	1					
6	3GB–82540–01	NEUTRAL SWITCH ASSY	1					
7	90430–10148	GASKET	1					
8	1XD–82540–00	NEUTRAL SWITCH ASSY	1					
9	93210–29196	O-RING	1					
10	90119–06137	BOLT, WITH WASHER	2					
11	5YP–85790–00	THERMOSENSOR ASSY	1					
12	90430–12202	GASKET	1					
13	3B4–83755–00	SENSOR, SPEED	1					
14	4D9–81168–00	.O-RING	1					
15	91312–06020	BOLT	1					
16	1D7–81960–01	RECTIFIER & REGULATOR ASSY	1					
17	90105–06833	BOLT, FLANGE	2					
18	5UG–H2100–00	BATTERY ASSY (GS U1L-11)	1					
19	1XD–H212B–00	BOX, BATTERY 1	1					
20	90480–01558	GROMMET	1					
21	90183–060A6	NUT, SPRING	4					
22	90183–05008	NUT, SPRING	2					
23	3L8–82131–01	BAND, BATTERY	2					
24	95812–06020	BOLT, FLANGE	1					
25	95702–06500	NUT, FLANGE	1					
26	90119–06868	BOLT, WITH WASHER	4					
27	1NS–F1338–00	CLAMP	1					

POWER PARTS By 4xQUAD

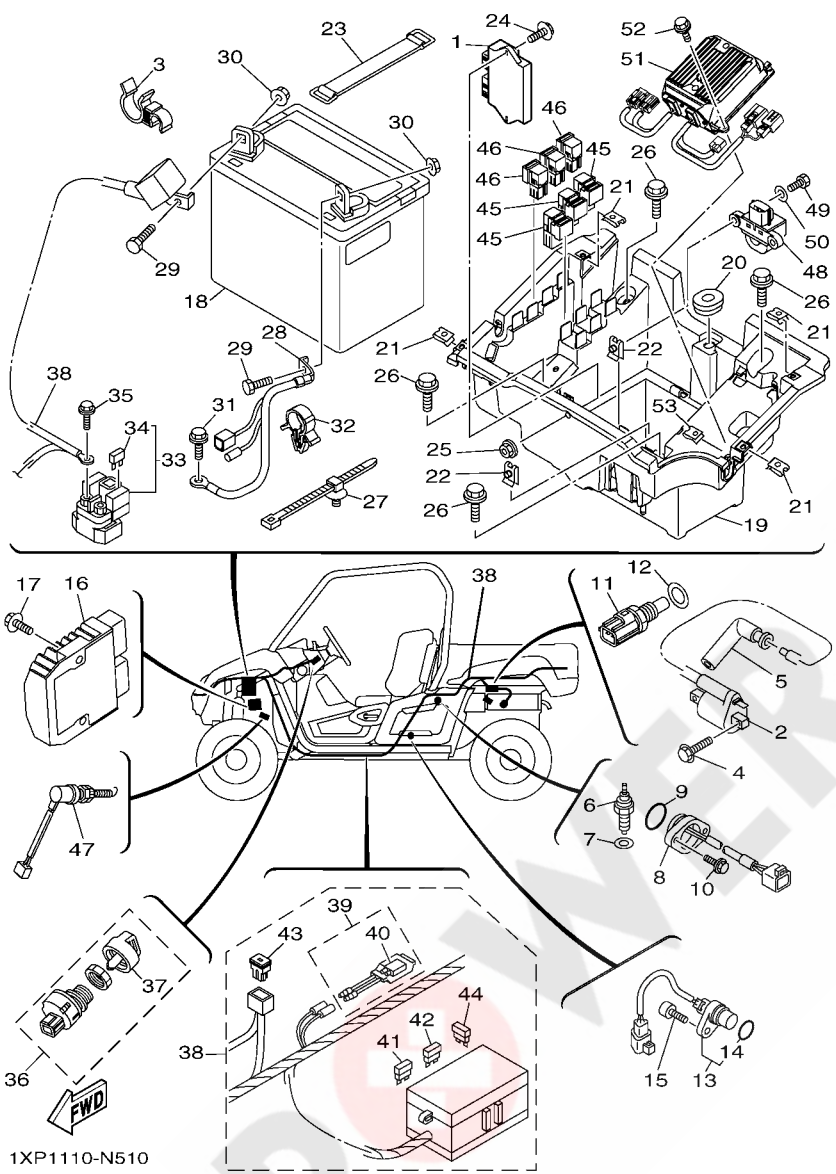

FIG. 51 ELECTRICAL 1

REF. NO.	PART NO.	DESCRIPTION	EUR					REMARKS
28	1XP–H2116–00	WIRE, MINUS LEAD	1					
29	97080–08020	BOLT	2					
30	90179–08015	NUT	2					
31	95812–06014	BOLT, FLANGE	1					
32	90464–15157	CLAMP	1					
33	5B4–81940–00	STARTER RELAY ASSY (RC19-080A)	1					
34	42X–82151–00	.FUSE (10A-BL)	2					
35	95022–06008	BOLT, FLANGE	2					
36	5UG–H2510–00	MAIN SWITCH ASSY	1					
37	5UG–H2579–00	.CAP, KEY	1					
38	1XP–82590–00	WIRE HARNESS ASSY	1					
39	5B4–82180–00	.CIRCUIT BREAKER ASSY	1					
40	5B4–82560–00	..THERMO SWITCH ASSY	1					
41	5JJ–82151–10	.FUSE (15A-BL)	2					
42	5JJ–82151–30	.FUSE (10A-BL)	6					
43	5PS–82151–00	.FUSE (40A)	2					
44	5JJ–82151–70	.FUSE (25A-BL)	2					
45	5DM–81950–00	RELAY ASSY (G8HN-1C4T-DJ-Y52)	3					
46	8FP–81950–01	RELAY ASSY (8FP-01)	3					
47	4KB–82530–10	STOP SWITCH ASSY	1					
48	3B4–82576–00	SENSOR, LEAN ANGLE	1					
49	97002–05016	BOLT	2					
50	92902–05600	WASHER, PLATE	2					
51	1XP–859A0–00	POWER STRG. CONT. UNIT ASSY	1					
52	95812–06016	BOLT, FLANGE	1					
53	90183–060A6	NUT, SPRING	1					

POWER PARTS By ATV QUAD

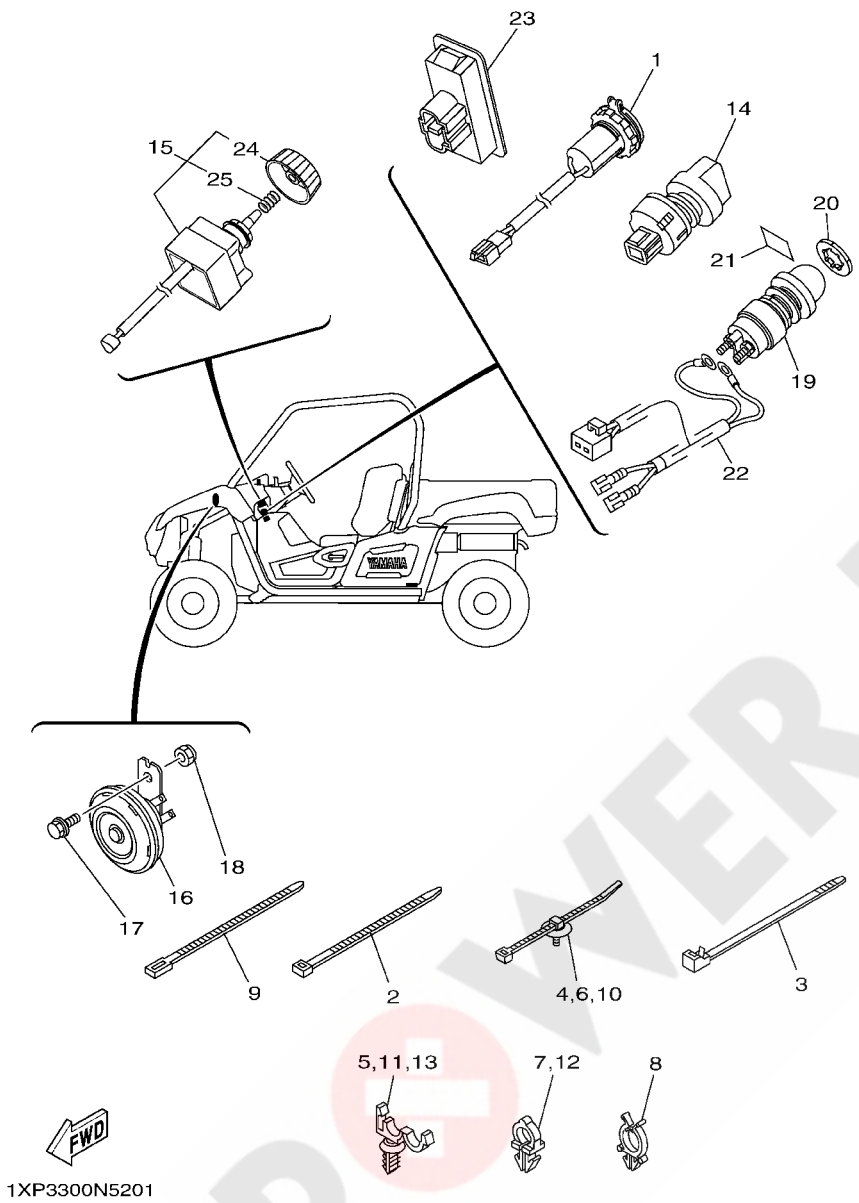

FIG. 52 ELECTRICAL 2

REF. NO.	PART NO.	DESCRIPTION	EUR					REMARKS
1	1HP–H254B–10	TERMINAL COMP.	1					
2	90464–48800	CLAMP	3					
3	90464–51800	CLAMP	3					213X7.60
4	5B4–F1338–00	CLAMP	5					
5	90464–12830	CLAMP	8					d: 12mm
6	1NS–F1338–00	CLAMP	4					
7	90464–10833	CLAMP	2					
8	90464–25826	CLAMP	1					
9	90464–31827	CLAMP	1					122X4.80
10	5B4–F1338–00	CLAMP	2					
11	90464–12830	CLAMP	1					d: 12mm
12	90464–10833	CLAMP	9					
13	90464–12830	CLAMP	1					d: 12mm
14	5UG–H2526–00	SWITCH, LAMP	1					
15	1XD–87280–00	SWITCH, SELECT	1					
16	5LB–83371–11	HORN	1					
17	95812–06016	BOLT, FLANGE	1					
18	95602–06200	NUT, SELF-LOCKING	1					
19	JR6–H270X–00	SWITCH	1					
20	5UG–F1244–00	NUT	1					
21	5UG–F151A–00	LABEL 1	1					
22	5UG–82309–10	WIRE, SUB LEAD	1					
23	1XD–H3530–00	PILOT LIGHT ASSY	1					
24	1XD–87285–00	.KNOB, SELECT SWITCH	1					
25	1XD–87288–00	.SPRING	1					

POWER PARTS By 4xQUAD

FIG. 53 EMBLEM & LABEL 1

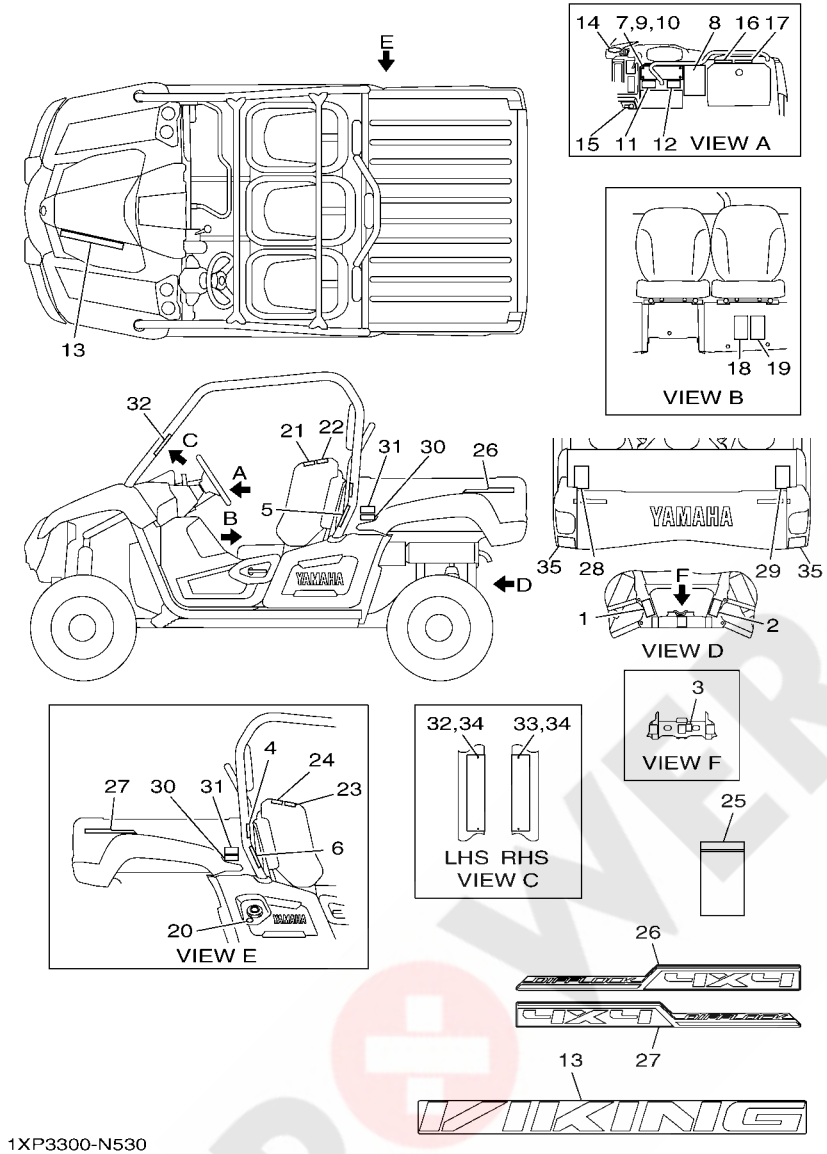

1XP3300-N530

REF. NO.	PART NO.	DESCRIPTION	EUR					REMARKS
1	1XD–F151K–00	LABEL 7	1					ENGLISH
2	1XD–F151K–10	LABEL 7	1					FRENCH
3	5UG–F151J–00	LABEL 6	1					
4	1XD–F4164–00	EMBLEM 4	1					ENGLISH
5	1XD–K7761–10	LABEL, WARNING 1	1					FRENCH
6	1XD–K7762–10	LABEL, WARNING 2	1					FRENCH
7	1XD–F1568–00	LABEL, WARNING	1					ENGLISH
8	1XD–F1568–10	LABEL, WARNING	1					FRENCH
9	4XE–F1539–10	RIVET	4					
10	4XE–F1549–00	WASHER, FENDER MOLD	4					
11	1XD–F1558–00	LABEL, WARNING 2	1					ENGLISH
12	1XD–F1558–10	LABEL, WARNING 2	1					FRENCH
13	1XD–F1781–00	EMBLEM 1	1					
14	1XP–F1783–00	EMBLEM 3	1					
15	5UG–F151A–00	LABEL 1	1					
16	1XD–F8446–00	LABEL, CAUTION	1					ENGLISH
17	1XD–F8446–10	LABEL, CAUTION	1					FRENCH
18	1XD–F1696–10	LABEL, CAUTION	1					ENGLISH
19	1XD–F1696–20	LABEL, CAUTION	1					FRENCH
20	4XE–F415E–10	LABEL, CAUTION	1					
21	1XD–K8483–00	LABEL WARNING	1					ENGLISH
22	1XD–K8483–10	LABEL WARNING	1					FRENCH
23	1XD–K8483–00	LABEL WARNING	1					ENGLISH
24	1XD–K8483–10	LABEL WARNING	1					FRENCH
25	1P0–F8186–01	POUCH	1					
26	1XD–F163G–00	EMBLEM 1	1					
27	1XD–F163H–00	EMBLEM 2	1					

POWER PARTS By 4WD

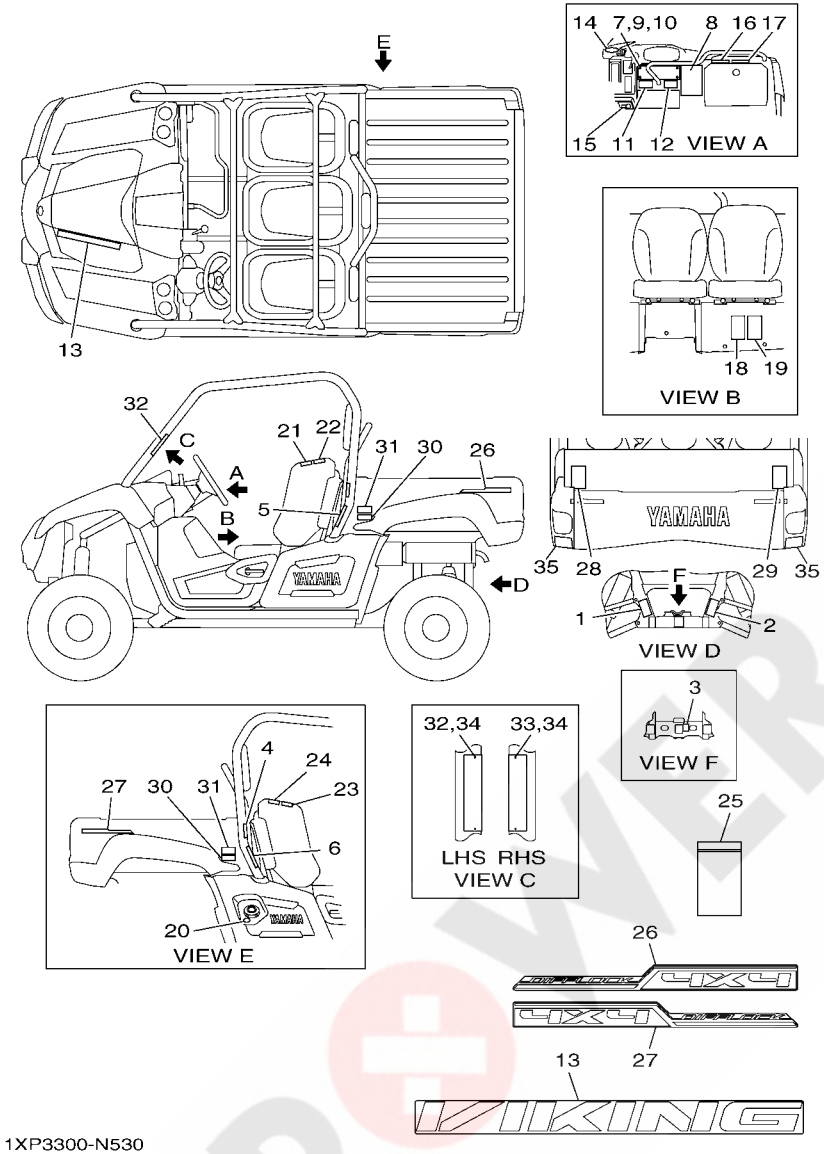

FIG. 53 EMBLEM & LABEL 1

REF. NO.	PART NO.	DESCRIPTION	EUR					REMARKS
28	1XD–F4897–00	EMBLEM	1					ENGLISH
29	1XD–F4897–10	EMBLEM	1					FRENCH
30	5B4–K7764–00	LABEL, WARNING 4	2					ENGLISH
31	5B4–K7764–10	LABEL, WARNING 4	2					FRENCH
32	1XD–K7761–00	LABEL, WARNING 1	1					ENGLISH
33	1XD–K7762–00	LABEL, WARNING 2	1					ENGLISH
34	4XE–F1539–10	RIVET	4					
35	5UG–H5131–00	REFLECTOR, REAR 1	2					

POWER PARTS By 4WQUAD

PART NO.	REF. NO.
2BG–11102–00	1 – 1
5VK–1111F–00	5 – 7
4G0–11133–11	1 – 2
3B4–11165–10	1 – 12
1XD–11166–00	1 – 20
371–11167–01	1 – 13
3B4–11181–00	1 – 4
3B4–11185–00	1 – 11
1S3–11186–00	1 – 17
214–11198–01	8 – 5
	26 – 33
3B4–11311–10	2 – 1
1S3–11351–00	2 – 2
2BG–11400–00	3 – 1
3B4–11401–09	3 – 2
3B4–11402–09	3 – 3
2BG–11447–00	3 – 21
2BG–11454–00	3 – 22
1HP–11531–10	3 – 23
1HP–11536–00	3 – 7
5KM–11565–00	3 – 8
1S3–11603–10	3 – 17
2BG–11631–00	3 – 16
5VK–11633–00	3 – 18
2BG–11651–00	3 – 6
5VK–11681–01	3 – 4
5VK–12111–00	4 – 1
5VK–12113–00	4 – 3
1PE–12116–00	4 – 4
3YF–12117–01	4 – 6
4G0–12118–00	4 – 7
5H0–12119–00	4 – 5
5VK–12121–00	4 – 2
5VK–12146–00	4 – 10
5VK–12151–00	4 – 8
5XT–12159–00	4 – 11
5VK–12161–00	4 – 9
2BG–12170–00	5 – 1
1S3–12176–00	5 – 9
3TB–12210–00	5 – 15
4DW–12213–00	5 – 17
3B4–12221–00	8 – 10
3B4–12231–01	5 – 12
3B4–12241–00	5 – 13
1S3–12280–01	5 – 4
5VK–12284–00	5 – 2
1S3–12290–00	5 – 3
5VK–12410–00	7 – 1

PART NO.	REF. NO.
5B4–12413–00	7 – 2
5B4–12422–00	6 – 15
3B4–12428–00	6 – 22
11H–12438–10	6 – 20
1XD–1243E–00	6 – 11
5D3–1243K–00	6 – 18
3B4–12450–00	6 – 14
5KM–12469–00	6 – 6
1XD–12481–00	6 – 1
1XD–13160–00	10 – 16
28P–13161–00	8 – 24
3B4–13171–00	8 – 16
3B4–13300–00	8 – 1
3B4–13329–00	8 – 2
1HP–13354–00	3 – 24
3B4–13355–00	8 – 12
5GH–13440–50	8 – 6
1XD–13470–00	8 – 8
1XD–13475–00	8 – 9
25G–13490–00	8 – 22
8FP–13556–00	10 – 7
5B4–13586–00	9 – 1
1XD–13750–00	10 – 1
1XD–13761–00	10 – 14
3B4–13907–10	30 – 6
1XD–13971–00	30 – 1
1XD–14147–00	10 – 15
5LP–14147–00	10 – 3
1UY–14155–00	10 – 12
1S3–14161–00	10 – 2
2C0–14216–00	10 – 8
8CC–14216–10	10 – 5
5UG–14293–00	10 – 10
3B4–14424–00	9 – 15
59V–14457–00	9 – 23
	9 – 31
5YP–14562–00	10 – 13
3EG–14613–00	11 – 14
1XD–14737–00	11 – 10
3B4–14759–01	11 – 12
2BG–1482K–00	1 – 24
2BG–14840–00	1 – 29
5JW–14889–00	1 – 26
5JW–14890–00	1 – 25
3B4–15100–29	12 – 1
5B4–15112–00	12 – 9
3B4–15113–00	13 – 5
3B4–15163–00	15 – 2

PART NO.	REF. NO.
36Y–15189–00	12 – 2
3B4–15315–00	13 – 13
5KM–15351–00	13 – 26
5B4–15362–00	12 – 8
3B4–15379–00	13 – 24
4WV–15381–00	13 – 21
11H–15383–02	17 – 3
3B4–15388–00	12 – 12
3B4–15411–10	13 – 1
1XD–1541A–00	13 – 28
1XD–15421–00	13 – 11
1XD–15431–00	13 – 23
1XD–15442–00	13 – 15
3B4–15451–00	13 – 2
3B4–15453–00	13 – 12
3B4–15463–00	15 – 12
1HP–15515–00	14 – 1
3B4–15517–01	14 – 4
3B4–15522–00	14 – 3
1PE–15560–00	14 – 5
5KM–15590–00	14 – 7
3B4–16181–00	3 – 20
1XD–16611–00	15 – 1
3B4–16620–00	15 – 10
4SH–16664–00	15 – 8
1HP–16717–00	15 – 9
1XD–17223–00	16 – 20
3B4–17233–00	16 – 15
16B–17243–00	16 – 26
3B4–17253–00	16 – 11
5B4–17285–00	16 – 18
3B4–17421–00	16 – 7
3B4–17432–01	16 – 25
3B4–17520–00	16 – 30
5B4–17521–00	17 – 1
1XD–17530–00	17 – 9
3B4–17531–00	17 – 21
3B4–17531–10	17 – 21
3B4–17531–20	17 – 21
3B4–17531–30	17 – 21
3B4–17531–40	17 – 21
3B4–17531–50	17 – 21
5KM–17531–50	17 – 6
3B4–17531–60	17 – 21
5KM–17531–60	17 – 6
5KM–17531–70	17 – 6
5KM–17531–80	17 – 6
5KM–17531–90	17 – 6

PART NO.	REF. NO.
5KM–17531–A0	17 – 6
5KM–17531–B0	17 – 6
3B4–17551–00	17 – 10
5B4–17556–00	26 – 52
1XD–1755A–00	17 – 22
3B4–17582–00	16 – 13
1XD–17606–00	15 – 16
3B4–17611–00	15 – 27
3B4–17623–02	15 – 19
3B4–17632–01	15 – 18
4WV–17639–10	15 – 23
1XD–17641–00	15 – 26
4WV–17644–00	15 – 37
1XD–17645–00	15 – 21
16B–17653–00	15 – 20
1XD–17660–00	15 – 30
4CW–17664–00	15 – 34
3B4–17670–10	15 – 31
1XD–17681–00	16 – 1
4WV–17684–00	15 – 36
3B4–17832–10	17 – 15
	17 – 23
1HP–18103–00	19 – 8
1XD–18104–00	19 – 9
3B4–18146–00	19 – 12
28P–18174–00	19 – 31
5KM–18191–00	19 – 7
1XD–18198–00	19 – 1
1HP–18380–00	19 – 10
1XD–18431–00	19 – 36
3B4–18511–11	18 – 6
1XD–18512–00	18 – 7
5B4–18531–00	18 – 8
1XD–18540–00	18 – 1
5KM–18542–00	18 – 3
4UN–18566–00	18 – 4
5B4–21485–00	20 – 2
	20 – 3
1XD–2175K–00	21 – 38
1AA–21815–00	7 – 25
1AA–21874–00	7 – 26
5KM–22149–10	24 – 11
	28 – 15
1XD–23517–00	36 – 29
	37 – 29
1XD–23579–00	28 – 3
	28 – 7
	33 – 23

PART NO.	REF. NO.
1XD–23579–00	34 – 23
5B4–23841–00	29 – 15
16B–2385L–10	27 – 7
16B–2385M–10	27 – 8
1XP–23881–00	29 – 20
1XP–238D0–00	29 – 19
1XD–24181–00	30 – 23
1XD–24182–00	30 – 26
28P–24380–00	30 – 27
1S3–24486–00	30 – 8
3B4–24491–00	30 – 7
2P5–24610–00	30 – 10
1XD–25111–00	33 – 25
	34 – 25
	36 – 4
	37 – 4
3B4–2512J–00	33 – 15
	34 – 15
3B4–25182–00	33 – 16
	34 – 16
5B4–25415–00	39 – 8
5UG–25719–00	41 – 5
1XD–25802–00	35 – 7
	35 – 20
3LD–25802–00	38 – 6
	38 – 20
1XD–25803–00	35 – 8
	35 – 21
3JD–25803–00	38 – 7
	38 – 21
1XD–25805–00	35 – 17
1XD–25805–10	35 – 30
1XD–25806–00	38 – 16
5B4–25806–00	39 – 23
1XD–25806–10	38 – 30
1XD–2580T–00	35 – 6
1XD–2580U–00	35 – 19
1XD–2580V–00	38 – 5
1XD–2580W–00	38 – 19
5B4–25814–10	39 – 5
5B4–2581R–00	39 – 7
5B4–25833–00	39 – 14
5B4–2583T–00	41 – 1
5UG–25852–00	41 – 6
5UG–25853–00	41 – 7
5UG–25854–00	41 – 8
5UG–25855–00	41 – 9
5B4–2585F–00	39 – 27

PART NO.	REF. NO.
1XD–25866–00	19 – 19
5KM–25875–00	41 – 19
3B4–25876–10	41 – 22
	41 – 31
5UG–25877–00	41 – 4
5UG–25878–00	41 – 3
5B4–25880–00	39 – 6
5UG–25880–00	41 – 12
1XD–25905–00	39 – 4
5B4–25913–00	39 – 10
3JD–25917–00	35 – 10
	35 – 23
	38 – 9
	38 – 23
	39 – 19
1XD–25919–00	35 – 11
	35 – 24
5B4–25919–00	39 – 25
3LD–25924–00	38 – 17
	38 – 31
5B4–25924–00	39 – 24
3JD–25926–00	35 – 15
	35 – 28
	38 – 14
	38 – 28
	39 – 18
1UY–25926–51	35 – 13
	35 – 26
	38 – 12
	38 – 26
	39 – 21
3TB–25933–00	35 – 18
	35 – 31
3LD–25934–01	38 – 10
	38 – 24
1UY–25937–51	35 – 9
	35 – 22
	38 – 8
	38 – 22
	39 – 20
1UY–25938–51	35 – 14
	35 – 27
	38 – 13
	38 – 27
	39 – 22
3JD–25961–00	35 – 16
	35 – 29
	38 – 15

PART NO.	REF. NO.
3JD–25961–00	38 – 29
5B4–25973–00	39 – 13
1UY–25973–51	39 – 15
5B4–25975–00	39 – 11
5B4–25976–00	39 – 9
5B4–25976–10	39 – 16
5B4–25976–20	39 – 17
5B4–25977–00	39 – 26
5B4–25978–00	39 – 12
1XD–26311–00	40 – 11
1XD–26341–00	40 – 18
1XD–2637E–00	19 – 18
4SS–27218–00	41 – 10
2YK–27222–00	41 – 11
4XY–2811A–01	20 – 17
4XY–28347–00	20 – 14
3B4–28349–00	21 – 34
	21 – 36
1XD–2837G–00	21 – 9
1XD–2837H–00	21 – 10
1XD–4581J–00	26 – 51
1XD–46106–00	26 – 49
2P5–46108–01	26 – 26
1XD–46109–00	26 – 36
1XD–46114–00	26 – 24
3B4–46117–00	26 – 7
3B4–46117–10	26 – 7
3B4–46117–20	26 – 7
3B4–46117–30	26 – 7
5KM–46126–00	25 – 33
3B4–46134–00	26 – 11
3B4–46135–00	26 – 12
5GT–46136–00	26 – 38
5KM–46136–00	25 – 37
5KM–46137–00	25 – 36
	26 – 48
1XD–4613F–00	26 – 60
1XD–46141–00	26 – 4
3B4–46142–00	26 – 23
4WV–46145–10	26 – 17
4S1–46146–00	26 – 5
1XD–46160–00	26 – 1
1XD–46161–00	26 – 3
1XD–46162–00	26 – 2
3B4–46163–00	26 – 14
3B4–46164–00	26 – 9
3B4–46166–00	26 – 10
1HP–4616A–00	26 – 16

PART NO.	REF. NO.
1XD–46173–00	26 – 47
5GT–46187–00	26 – 29
	26 – 55
5GH–46293–00	26 – 19
1XD–46470–00	26 – 6
5KM–46559–00	25 – 35
3B4–47359–00	26 – 15
4D9–81168–00	51 – 14
1XD–81410–00	46 – 1
28P–81450–01	46 – 2
5KM–81677–00	41 – 28
3AJ–81801–00	47 – 2
3KS–81809–00	47 – 6
3AJ–81826–00	47 – 8
4XV–8182A–00	47 – 10
11H–81844–00	47 – 7
1FK–81847–00	47 – 4
3TB–81847–00	47 – 3
4NK–81850–00	47 – 5
1S3–81890–00	47 – 1
5B4–81940–00	51 – 33
5DM–81950–00	51 – 45
8FP–81950–01	51 – 46
1D7–81960–01	51 – 16
3L8–82131–01	51 – 23
42X–82151–00	51 – 34
5PS–82151–00	51 – 43
5JJ–82151–10	51 – 41
5JJ–82151–30	51 – 42
5JJ–82151–70	51 – 44
5B4–82180–00	51 – 39
5UG–82309–10	52 – 22
5YU–82310–10	51 – 2
5B4–82370–00	51 – 5
5S7–82380–00	10 – 9
4KB–82530–10	51 – 47
1XD–82540–00	51 – 8
3GB–82540–01	51 – 6
5B4–82560–00	51 – 40
3B4–82576–00	51 – 48
1XP–82590–00	51 – 38
5LB–83371–11	52 – 16
1XP–83500–00	48 – 1
3B4–83755–00	51 – 13
28P–84300–00	49 – 1
28P–84314–00	49 – 2
2GU–84334–00	49 – 6
3B4–84340–00	49 – 3

PART NO.	REF. NO.
5GH–84703–10	49 – 7
5KM–84710–00	50 – 1
1A2–84714–41	50 – 2
5KM–8472C–10	50 – 3
5YP–85790–00	51 – 11
3B4–85885–00	10 – 6
8FP–85886–00	9 – 21
1XD–8591A–00	51 – 1
1XP–859A0–00	51 – 51
1XD–87280–00	52 – 15
1CT–E1195–00	25 – 8
1XD–E1428–00	25 – 16
1XD–E1429–00	25 – 27
1XD–E142A–00	25 – 21
1XD–E1486–00	25 – 20
1CT–E1557–00	25 – 15
1XD–E1614–00	25 – 22
1XD–E2157–00	25 – 11
1XD–E2228–00	25 – 2
1XD–E2405–00	7 – 18
1XD–E2443–00	7 – 33
1XD–E2461–00	7 – 17
1XD–E2462–00	7 – 20
1XD–E2483–00	7 – 13
1XD–E2518–00	7 – 22
1XD–E2564–00	7 – 12
1XD–E2576–00	7 – 7
1XD–E2577–00	7 – 8
1XD–E2578–00	7 – 9
1XD–E2579–00	7 – 10
1XD–E2675–00	7 – 19
1CT–E3275–00	25 – 12
1CT–E3362–00	25 – 9
1XD–E4410–00	9 – 10
1XD–E4411–00	9 – 11
1XD–E4412–00	9 – 16
1XD–E4417–00	9 – 20
1XD–E4431–00	9 – 8
1XD–E443A–00	9 – 30
1XD–E4451–00	9 – 19
1XD–E4452–00	9 – 17
1XD–E4453–00	9 – 6
1XD–E4458–00	9 – 12
1XD–E4462–00	9 – 13
1XD–E4463–00	9 – 9
1XD–E4467–00	9 – 14
1XD–E4472–00	9 – 18
1XD–E4476–00	9 – 28

PART NO.	REF. NO.
1XD–E4611–00	11 – 1
1XD–E4710–00	11 – 4
1XD–E4714–00	11 – 2
1XD–E4745–00	11 – 9
2BG–E4755–00	11 – 6
2BG–E4780–00	11 – 5
1XD–E4881–00	1 – 28
1XD–E4882–00	1 – 30
1XD–E511B–00	25 – 7
1CT–E5371–00	25 – 6
1XD–E5472–00	13 – 33
	13 – 36
1XD–E5473–00	13 – 34
1XD–E5474–00	13 – 32
1XD–E5477–00	13 – 29
1CT–E6377–00	25 – 17
1XD–E7051–00	25 – 26
1XD–E811A–00	19 – 38
1HP–E8125–00	19 – 27
1HP–E8154–00	19 – 35
1XD–E8169–00	19 – 25
1XD–E8172–00	19 – 33
1XD–E8190–00	19 – 24
1HP–E8196–00	19 – 28
1XD–F1110–00	20 – 1
1XD–F113B–11	43 – 8
1XD–F1208–00	29 – 8
5UG–F1244–00	52 – 20
1NS–F1338–00	7 – 11
	51 – 27
	52 – 6
5B4–F1338–00	40 – 13
	52 – 4
	52 – 10
1XD–F139T–00	21 – 3
1XD–F146A–00	22 – 13
	22 – 26
1XD–F1511–00	21 – 25
1XD–F1511–20	21 – 25
1XD–F1515–00	21 – 6
5UG–F151A–00	52 – 21
	53 – 15
5UG–F151J–00	53 – 3
1XD–F151K–00	53 – 1
1XD–F151K–10	53 – 2
4XE–F1539–10	53 – 9
	53 – 34
1XD–F1541–00	21 – 2

PART NO.	REF. NO.
4XE–F1549–00	53 – 10
1XD–F1558–00	53 – 11
1XD–F1558–10	53 – 12
1XD–F1568–00	53 – 7
1XD–F1568–10	53 – 8
1XD–F160F–00	21 – 5
1XD–F163A–00	21 – 32
1XD–F163G–00	53 – 26
1XD–F163H–00	53 – 27
1XD–F1696–10	53 – 18
1XD–F1696–20	53 – 19
1XD–F1721–00	22 – 1
5B4–F1722–00	22 – 20
	22 – 34
1XD–F172A–00	23 – 12
1XD–F1731–00	22 – 5
1XD–F175B–00	21 – 20
1XD–F1781–00	53 – 13
1XP–F1783–00	53 – 14
1XD–F178K–00	29 – 11
1XD–F1797–00	22 – 11
	22 – 24
1XD–F1871–00	7 – 24
1XD–F197K–00	22 – 10
	22 – 23
1XD–F1981–00	25 – 46
1XD–F1982–00	21 – 37
1XD–F1982–20	21 – 37
JW6–F2123–00	43 – 2
1XD–F2128–00	24 – 12
1XD–F2129–00	24 – 13
1XD–F2171–00	24 – 1
1XD–F2172–00	24 – 3
1XD–F217M–00	24 – 5
1XD–F217N–00	24 – 7
1XD–F2200–20	27 – 1
1HP–F2259–21	27 – 2
	28 – 19
1XD–F2327–00	23 – 9
1XD–F2328–00	23 – 14
1XD–F2341–00	36 – 34
1XD–F2342–00	37 – 34
1XD–F2361–00	44 – 11
1XD–F2362–00	44 – 15
1XD–F2548–00	40 – 1
1XD–F258G–00	21 – 15
1XD–F2891–00	43 – 46
1XD–F2898–00	20 – 18

PART NO.	REF. NO.
1XD–F311F–00	32 – 10
1XD–F3123–00	28 – 22
1XD–F3133–00	28 – 23
1XD–F3165–00	29 – 12
1XD–F3390–20	28 – 18
16B–F3394–01	32 – 15
1XD–F3400–00	29 – 1
1XD–F3447–00	29 – 13
1XD–F3489–00	29 – 9
1XD–F3501–00	33 – 19
1XD–F3502–00	34 – 19
1HP–F3526–00	24 – 2
	24 – 4
	24 – 6
	24 – 8
	28 – 2
	28 – 6
	28 – 10
	28 – 12
1XD–F3540–00	28 – 1
1XD–F3550–00	28 – 5
1XD–F3570–00	28 – 9
1XD–F3580–00	28 – 11
1XD–F3818–00	29 – 28
1P0–F3833–00	29 – 16
16B–F3838–00	29 – 25
1XD–F3840–00	29 – 17
1XD–F3844–00	29 – 3
1XD–F386G–00	27 – 11
1XD–F386H–00	27 – 12
1XD–F387F–00	29 – 6
1XD–F387G–00	29 – 4
1XD–F387J–00	29 – 7
1XD–F387K–00	29 – 5
5UG–F389E–00	43 – 37
1XD–F38G0–00	29 – 2
1XD–F38H0–00	29 – 10
1XD–F4110–00	30 – 5
1XD–F4157–00	30 – 24
4XE–F415E–10	53 – 20
1XD–F4164–00	53 – 4
1XD–F4291–00	30 – 21
1XD–F4571–00	43 – 11
1XD–F463F–00	43 – 41
1XD–F463G–00	22 – 14
	22 – 27
1XD–F467K–00	32 – 8
1XD–F4700–00	31 – 4

PART NO.	REF. NO.
1XD–F4700–00	31 – 17
	31 – 30
1XD–F470J–00	32 – 3
1RB–F470L–00	32 – 13
1RB–F470R–00	32 – 11
1XD–F470R–00	32 – 12
1XD–F4711–00	31 – 3
	31 – 16
	31 – 29
1XD–F4723–00	31 – 6
	31 – 19
	31 – 32
5UG–F472L–50	32 – 1
1XD–F4731–00	31 – 5
	31 – 18
	31 – 31
1XD–F473C–00	31 – 7
1XD–F473D–00	31 – 20
1XD–F473Y–00	31 – 33
1XD–F4742–00	31 – 10
	31 – 23
	31 – 34
1XD–F4758–00	43 – 13
1XD–F4758–10	43 – 14
1XD–F475X–00	31 – 11
	31 – 25
1XD–F4790–00	31 – 2
	31 – 15
	31 – 28
1XP–F481H–00	45 – 29
1XD–F4850–00	43 – 1
5UG–F4867–00	43 – 23
	43 – 31
1XD–F4897–00	53 – 28
1XD–F4897–10	53 – 29
1XD–F510U–00	36 – 15
	37 – 15
5UG–F510U–00	33 – 13
	34 – 13
1XD–F511G–00	33 – 12
	34 – 12
	36 – 13
	37 – 13
1XD–F511H–00	33 – 11
	34 – 11
	36 – 12
	37 – 12
1XD–F512A–00	33 – 5

PART NO.	REF. NO.
1XD–F512A–00	34 – 5
	36 – 21
	37 – 21
1XD–F512G–00	36 – 14
	37 – 14
1XD–F512G–10	33 – 14
	34 – 14
5UG–F512H–00	33 – 17
	34 – 17
	36 – 17
	37 – 17
1XD–F512J–00	36 – 16
	37 – 16
1XD–F514A–00	33 – 29
	34 – 29
	36 – 32
	37 – 32
1XD–F5180–00	33 – 1
	34 – 1
1XD–F518F–00	33 – 6
	34 – 6
1XD–F530F–00	36 – 22
1XD–F530T–00	36 – 8
	37 – 8
1XD–F530T–10	33 – 7
	34 – 7
1XD–F530V–00	36 – 9
	37 – 9
1XD–F530V–10	33 – 8
	34 – 8
1XD–F530X–00	36 – 10
	37 – 10
1XD–F530X–10	33 – 9
	34 – 9
1XD–F530Y–00	36 – 11
	37 – 11
1XD–F530Y–10	33 – 10
	34 – 10
1XD–F531H–00	36 – 7
	37 – 7
1XD–F532F–00	37 – 22
1XD–F536E–00	36 – 18
	37 – 18
1XD–F5390–00	36 – 1
	37 – 1
1XD–F5690–00	40 – 15
1XD–F5711–00	39 – 1
1XD–F582T–00	35 – 1

PART NO.	REF. NO.
1XD–F582T–00	35 – 3
	38 – 1
	38 – 3
1XD–F5871–00	41 – 27
1XD–F5872–00	41 – 17
1XD–F5873–00	41 – 29
1XD–F5882–00	41 – 16
1XD–F5926–00	32 – 9
1XD–F6136–00	32 – 6
1XD–F6372–00	21 – 18
1XD–F6381–00	19 – 20
1XD–F7200–00	40 – 7
1XD–F7286–00	42 – 6
1XD–F7411–00	42 – 1
1XD–F7413–00	42 – 13
1HP–F7414–00	11 – 8
1XD–F7421–00	42 – 8
1XD–F7498–00	31 – 1
1XD–F7499–00	31 – 14
1XD–F749A–00	31 – 27
1XD–F7801–00	40 – 3
1XD–F7827–00	43 – 3
5B4–F8100–00	20 – 15
5UG–F811A–00	20 – 16
1P0–F8186–01	53 – 25
1XD–F8309–00	21 – 19
1XD–F831T–00	20 – 10
1XD–F834V–00	20 – 12
1XD–F8378–00	22 – 21
	22 – 33
1XD–F8385–00	44 – 7
1XD–F8395–00	44 – 9
1XD–F839N–00	43 – 12
1XD–F83D1–00	43 – 38
1XD–F83D2–00	43 – 39
1XD–F8415–00	43 – 6
1XD–F842M–00	44 – 3
1XD–F842N–00	44 – 5
1XD–F8446–00	53 – 16
1XD–F8446–10	53 – 17
1XD–F845N–00	44 – 1
1XD–F849N–00	43 – 16
1XD–F849N–10	43 – 17
1XD–F84A3–00	23 – 1
1XD–F84A4–00	23 – 4
1XD–F84A5–00	23 – 7
1XD–G2134–00	25 – 13
1XD–G2478–00	25 – 23

PART NO.	REF. NO.
1XD–G5319–00	25 – 18
1XD–G5567–00	25 – 24
1XD–G5577–00	25 – 25
1XD–G6101–00	25 – 1
1XD–G6110–00	25 – 29
1XD–G6121–00	25 – 28
1XD–G6126–00	25 – 14
1XD–G6152–00	25 – 3
1CT–G6156–00	25 – 5
1XD–G6172–00	25 – 31
1XD–G631A–00	25 – 4
1CT–G6819–00	25 – 10
1XD–G7491–00	27 – 6
1XD–G7531–00	25 – 19
1XD–H1815–00	47 – 9
5UG–H2100–00	51 – 18
1XP–H2116–00	51 – 28
1XD–H212B–00	51 – 19
5UG–H2510–00	51 – 36
5UG–H251S–00	40 – 16
5UG–H2526–00	52 – 14
1HP–H254B–00	52 – 1
5UG–H2579–00	51 – 37
JR6–H270X–00	52 – 19
1XD–H3530–00	52 – 23
5UG–H5131–00	53 – 35
JW1–K6179–01	42 – 4
	42 – 11
	42 – 15
1XD–K7171–00	22 – 17
	22 – 30
1XD–K7180–00	43 – 9
5UG–K7195–10	43 – 43
1XD–K7515–00	22 – 12
	22 – 25
1XD–K7526–00	45 – 6
	45 – 12
1XP–K7588–00	45 – 27
5UG–K7588–00	45 – 25
	45 – 30
1XD–K7711–10	21 – 1
1XD–K7761–00	53 – 32
1XD–K7761–10	53 – 5
1XD–K7762–00	53 – 33
1XD–K7762–10	53 – 6
5B4–K7764–00	53 – 30
5B4–K7764–10	53 – 31
1XD–K810N–00	43 – 36

PART NO.	REF. NO.
5UG–K818M–00	43 – 10
1XD–K8191–00	43 – 20
1XD–K8191–20	43 – 20
1XD–K8192–00	43 – 28
1XD–K8192–20	43 – 28
1XD–K830A–00	45 – 17
1XD–K830B–00	45 – 19
1XD–K830C–00	45 – 21
1XP–K8314–00	45 – 23
1XD–K831A–00	45 – 1
1XD–K831E–00	45 – 7
1XP–K8366–00	45 – 26
5UG–K8366–00	45 – 24
1XD–K8392–00	45 – 13
1XD–K8393–00	45 – 15
1XD–K8483–00	53 – 21
	53 – 23
1XD–K8483–10	53 – 22
	53 – 24
1XD–K8557–00	22 – 9
	22 – 22
5UG–W0042–00	41 – 2
1UY–W0048–50	35 – 12
	35 – 25
	38 – 11
	38 – 25
90101–06824	32 – 4
90101–06832	31 – 8
	31 – 21
	31 – 35
90105–06012	37 – 30
90105–06078	5 – 8
90105–06082	5 – 14
	8 – 11
	12 – 13
90105–06176	19 – 17
90105–06639	20 – 5
	20 – 9
90105–06831	7 – 16
	19 – 40
	20 – 19
	30 – 22
	43 – 47
90105–06832	30 – 28
90105–06833	9 – 25
	41 – 30
	51 – 17
90105–07006	5 – 5

PART NO.	REF. NO.
90105–07006	5 – 10
90105–08129	41 – 13
90105–08867	20 – 13
	20 – 20
	23 – 13
	30 – 25
90105–10255	26 – 39
90105–10265	35 – 5
	38 – 18
	38 – 32
90105–10267	24 – 9
	28 – 13
90105–10283	28 – 21
90105–10314	20 – 8
90105–10402	39 – 28
90105–12055	27 – 4
90105–12056	27 – 3
90105–12066	26 – 41
90105–12082	25 – 47
90105–12089	36 – 30
90105–14003	18 – 13
90109–06172	19 – 34
90109–06202	21 – 23
	44 – 8
	44 – 10
	44 – 13
	44 – 17
90109–06212	43 – 44
	43 – 45
90109–06220	24 – 14
	28 – 24
90109–06262	9 – 27
90109–063F5	32 – 2
90109–06897	22 – 15
	22 – 28
90109–08082	35 – 2
	35 – 4
	38 – 2
	38 – 4
90109–09002	1 – 6
90109–09003	1 – 5
90109–09005	1 – 7
90110–06175	1 – 27
90110–06228	39 – 2
90110–08091	17 – 8
90111–06086	22 – 18
	22 – 31
90111–06814	43 – 22

PART NO.	REF. NO.
90111–06814	43 – 30
	45 – 31
90111–10802	45 – 14
	45 – 16
	45 – 18
	45 – 20
90114–12002	33 – 26
	34 – 26
	36 – 5
	37 – 5
90119–06137	51 – 10
90119–06215	21 – 24
90119–06226	21 – 11
	21 – 13
	21 – 28
	21 – 29
	21 – 35
	22 – 2
	22 – 4
	22 – 6
	22 – 8
	42 – 16
	42 – 17
	42 – 20
90119–06868	7 – 23
	7 – 31
	51 – 26
90119–10023	2 – 3
90149–05016	18 – 5
90149–06280	21 – 30
90149–06846	43 – 42
90149–08013	17 – 4
90149–08049	14 – 8
90154–05021	49 – 10
90157–04006	15 – 24
90159–05044	49 – 8
90164–04800	21 – 4
90167–06800	44 – 4
	44 – 6
	45 – 28
90170–06128	4 – 12
90170–18003	3 – 27
90170–36279	15 – 38
90171–12001	28 – 16
	29 – 23
90179–08015	51 – 30
90179–12262	33 – 4
	34 – 4

PART NO.	REF. NO.
90179–12262	36 – 6
	37 – 6
90179–16004	3 – 14
90179–16005	15 – 29
	15 – 39
90179–16006	17 – 17
	17 – 25
	26 – 53
90179–22013	17 – 7
90179–22021	15 – 11
90179–24006	33 – 28
	34 – 28
	36 – 20
	37 – 20
90179–55660	17 – 26
90179–60001	17 – 12
90183–05008	49 – 9
	51 – 22
90183–06071	21 – 21
90183–060A6	21 – 22
	21 – 31
	23 – 2
	23 – 6
	23 – 10
	23 – 15
	42 – 2
	42 – 3
	42 – 9
	42 – 10
	42 – 14
	44 – 12
	44 – 16
	51 – 21
	51 – 53
90185–10011	20 – 4
	20 – 6
	26 – 45
	27 – 14
	45 – 3
	45 – 5
	45 – 9
	45 – 11
90185–10012	24 – 10
	27 – 10
	28 – 14
	28 – 20
90185–12002	25 – 44
	25 – 48

PART NO.	REF. NO.
90185–12002	26 – 42
90185–12008	29 – 26
90185–12009	27 – 5
90185–12010	36 – 31
	37 – 31
90201–02800	21 – 8
90201–047R9	15 – 25
90201–06036	19 – 5
	19 – 16
	19 – 29
90201–06078	31 – 9
	31 – 22
	31 – 36
90201–06081	50 – 6
90201–065G8	30 – 19
90201–10035	26 – 40
	26 – 46
	27 – 9
90201–10118	41 – 26
	41 – 35
90201–11801	32 – 16
90201–132G5	19 – 3
90201–133E5	43 – 4
90201–15018	40 – 4
	40 – 8
90201–15029	16 – 27
90201–16013	3 – 13
90201–16021	26 – 54
90201–166R5	17 – 16
	17 – 24
90201–170U8	16 – 22
90201–190T7	15 – 28
90201–20028	16 – 19
90201–25023	33 – 27
	34 – 27
	36 – 19
	37 – 19
90201–25290	16 – 9
90201–286K9	14 – 2
90201–46M28	17 – 5
90214–22007	16 – 16
90215–10008	8 – 14
90215–18001	3 – 28
90240–08005	41 – 14
90267–24143	21 – 7
90267–489U9	31 – 12
	31 – 26
90269–05055	19 – 32

PART NO.	REF. NO.
90269–06800	44 – 14
	44 – 18
90269–07803	13 – 30
	13 – 35
	21 – 12
	21 – 14
	21 – 16
	21 – 27
	21 – 33
	22 – 3
	22 – 7
	23 – 3
	23 – 5
	23 – 8
	23 – 11
	23 – 16
	42 – 5
	42 – 7
	42 – 12
	42 – 18
	42 – 19
	43 – 21
	43 – 29
90280–05001	3 – 12
90282–05013	3 – 25
90340–10001	26 – 18
90340–14016	13 – 9
90340–14029	26 – 32
90340–14036	18 – 15
90340–14132	8 – 4
90340–36004	13 – 7
90380–10002	14 – 6
90381–18003	36 – 27
	37 – 27
90387–0613B	19 – 2
90387–061V1	30 – 18
90387–07021	30 – 16
90387–07037	9 – 26
90387–12N54	36 – 28
	37 – 28
90387–15018	16 – 29
90387–20021	16 – 21
90387–22032	16 – 8
90387–24001	3 – 26
90387–250R3	16 – 14
90387–26001	16 – 4
90387–35007	33 – 22
	34 – 22

PART NO.	REF. NO.
90387–35007	36 – 25
	37 – 25
90401–08004	1 – 22
90401–08006	8 – 25
90401–10015	41 – 25
	41 – 34
90401–10024	8 – 19
90401–14118	8 – 17
90401–20009	8 – 7
90430–06014	6 – 24
	7 – 3
90430–08119	1 – 23
	8 – 26
90430–10003	26 – 20
90430–10148	51 – 7
90430–10188	8 – 20
90430–12202	51 – 12
90430–14043	8 – 18
90430–14194	18 – 14
	18 – 16
90445–07032	25 – 38
90445–07340	6 – 25
90445–07809	26 – 34
90445–08845	7 – 29
90445–08846	7 – 27
90445–09220	50 – 5
90445–09826	30 – 13
90445–09827	30 – 11
90445–16018	6 – 9
90445–29002	6 – 4
90450–32015	6 – 5
90450–59009	9 – 5
90450–72004	9 – 2
	9 – 3
90450–94001	9 – 29
	13 – 37
90450–99004	9 – 7
90460–85135	13 – 31
90461–12800	7 – 15
90462–10048	19 – 14
90464–09013	25 – 42
90464–10833	25 – 41
	52 – 7
	52 – 12
90464–12830	40 – 19
	52 – 5
	52 – 11
	52 – 13

PART NO.	REF. NO.
90464–14004	30 – 2
90464–15065	25 – 40
90464–15157	51 – 32
90464–16012	41 – 24
	41 – 33
90464–18002	41 – 21
90464–18016	51 – 3
90464–20010	30 – 4
90464–20804	40 – 14
90464–25826	52 – 8
90464–29179	7 – 28
	7 – 30
90464–31827	52 – 9
90464–40825	40 – 12
90464–48800	52 – 2
90464–51800	52 – 3
90467–07029	25 – 39
	26 – 35
90467–07093	6 – 26
90467–08003	7 – 32
90467–09006	30 – 12
	30 – 14
90467–140A4	1 – 21
	9 – 4
90467–15054	6 – 10
	6 – 12
	6 – 13
90467–17089	1 – 31
90467–220A1	9 – 24
	9 – 32
90467–26189	7 – 14
90468–16001	19 – 23
90468–16191	43 – 5
90480–01400	30 – 17
90480–01558	21 – 26
	51 – 20
90480–13018	13 – 25
90480–13567	9 – 33
90480–15235	7 – 21
	43 – 19
90480–18016	30 – 15
90480–20543	30 – 3
90501–05764	49 – 5
90501–06022	18 – 2
90501–100A8	18 – 12
90501–140A2	18 – 9
90501–20361	25 – 30
90501–220A1	3 – 9

POWER PARTS

PART NO.	REF. NO.
90501–650A0	15 – 35
90506–20192	40 – 6
	40 – 10
90506–26012	11 – 3
90508–35764	19 – 4
91312–05014	13 – 6
	46 – 4
91312–06012	6 – 2
	8 – 21
	12 – 11
91312–06020	6 – 7
	51 – 15
91312–06025	5 – 16
91312–06030	1 – 8
91312–06040	2 – 4
91312–08040	12 – 7
91402–20020	29 – 24
	41 – 15
91402–25020	28 – 17
92012–06012	33 – 30
	34 – 30
	36 – 33
	36 – 35
	37 – 33
	37 – 35
92012–06030	46 – 3
92012–10070	45 – 4
	45 – 10
92502–06012	10 – 4
92902–05600	51 – 50
92902–06100	43 – 24
	43 – 32
92902–08600	17 – 20
	19 – 22
92902–12200	25 – 45
	25 – 49
	26 – 43
	29 – 27
93101–10090	6 – 19
93101–12168	13 – 20
93101–35001	15 – 17
93102–17263	19 – 11
93102–30010	17 – 14
	17 – 27
93102–30170	26 – 50
93102–35004	15 – 4
93102–42004	16 – 6
93104–41119	15 – 32

PART NO.	REF. NO.
93105–46001	26 – 13
93106–50002	33 – 21
	34 – 21
	36 – 24
	37 – 24
93210–10096	8 – 23
93210–14369	13 – 10
93210–16325	12 – 3
93210–16M69	26 – 37
93210–21190	6 – 3
93210–21631	12 – 10
93210–26001	16 – 5
93210–29196	51 – 9
93210–33786	6 – 8
93210–357A3	13 – 8
93210–41042	7 – 6
93210–44545	15 – 33
93210–78544	1 – 18
	17 – 18
93210–96601	1 – 14
93211–59001	15 – 22
93306–00006	6 – 17
93306–00401	16 – 2
93306–00613	26 – 8
93306–07209	5 – 6
93306–07801	16 – 3
93306–20103	13 – 19
93306–20309	16 – 24
93306–20483	16 – 23
93306–20654	17 – 13
93306–20725	33 – 20
	34 – 20
	36 – 23
	37 – 23
93306–30438	3 – 30
	16 – 31
93306–30534	3 – 29
93306–30584	17 – 2
93306–30810	3 – 15
93306–37206	17 – 11
93310–31576	16 – 28
93310–32590	16 – 10
93310–84037	3 – 5
93315–21813	15 – 7
93316–01003	15 – 3
93399–99948	26 – 27
	26 – 30
	26 – 56

PART NO.	REF. NO.
93399–99948	26 – 58
93410–22039	25 – 34
93410–46079	15 – 6
93430–12008	40 – 5
	40 – 9
93440–20088	26 – 28
	26 – 31
	26 – 57
	26 – 59
93440–25084	16 – 12
	16 – 17
93450–22119	33 – 18
	34 – 18
93450–24154	3 – 19
93503–08007	18 – 11
93604–10011	6 – 27
93606–09002	3 – 10
93612–16254	1 – 10
93700–06004	36 – 26
	37 – 26
93900–00813	33 – 3
	34 – 3
	36 – 3
	37 – 3
94108–12818	33 – 2
	34 – 2
94110–12815	36 – 2
	37 – 2
94580–31074	8 – 15
94591–57126	5 – 11
94701–00420	1 – 9
95022–06008	51 – 35
95022–06010	6 – 23
	7 – 4
95022–06012	1 – 15
	11 – 7
	19 – 37
95022–06016	13 – 22
95022–06020	1 – 16
	1 – 19
	7 – 5
95022–06025	19 – 13
95022–06030	6 – 16
	12 – 5
	13 – 4
	15 – 14
	47 – 11
95022–06040	8 – 3

PART NO.	REF. NO.
95022–06040	15 – 15
95022–06050	6 – 28
	6 – 29
95022–06060	12 – 6
95022–08025	29 – 18
95022–10030	29 – 14
95302–06800	30 – 9
	43 – 25
	43 – 33
95312–10600	8 – 13
95602–06200	22 – 16
	22 – 19
	22 – 29
	22 – 32
	43 – 27
	43 – 35
	52 – 18
95602–08200	43 – 7
9560P–06200	45 – 33
95612–06100	32 – 5
	39 – 3
95612–08625	1 – 3
95702–05500	48 – 2
95702–06300	50 – 4
95702–06500	51 – 25
95702–08500	11 – 13
95802–06030	30 – 20
95812–06010	41 – 20
	41 – 23
	41 – 32
	43 – 15
	43 – 18
95812–06012	19 – 39
	40 – 17
95812–06014	26 – 21
	51 – 31
95812–06016	19 – 30
	43 – 26
	43 – 34
	51 – 52
	52 – 17
95812–06020	51 – 24
95812–06025	41 – 18
95812–06035	19 – 6
	43 – 40
95812–08012	31 – 13
	31 – 24
	31 – 37

PART NO.	REF. NO.
95812–08012	32 – 7
95812–08014	19 – 21
95812–08016	20 – 11
	25 – 50
	40 – 2
95812–08020	26 – 61
	29 – 22
95812–08040	11 – 11
	26 – 22
95812–08050	26 – 25
95812–10016	44 – 2
	45 – 22
95812–10020	27 – 13
95812–10025	26 – 44
95812–10035	20 – 7
95812–10045	45 – 2
	45 – 8
95812–12020	32 – 14
95812–12130	25 – 43
95822–06012	21 – 17
95822–06016	29 – 21
95822–06020	13 – 27
95822–06030	13 – 14
	13 – 17
95822–06040	13 – 18
95822–10040	7 – 34
9582P–06012	45 – 32
97002–05016	51 – 49
97002–06016	51 – 4
97022–08030	17 – 19
97080–08020	51 – 29
97702–50520	9 – 22
98502–03530	49 – 4
98502–04006	10 – 11
99002–06600	19 – 26
99009–10400	6 – 21
99009–12400	18 – 10
99009–19400	25 – 32
99009–32400	28 – 4
	28 – 8
	33 – 24
	34 – 24
99009–35400	3 – 11
99009–80500	15 – 5
99530–08012	19 – 15
99530–10116	12 – 4
	13 – 3
	13 – 16

PART NO.	REF. NO.
99530–10116	15 – 13
99530–14016	12 – 14

POWER PARTS