YAMAHA

PARTS CATALOGUE

YXZ10YPSG (2HC1) U.S.A.

1R2HC-110E1

( )

YAMAHA GENUINE Parts & Accessories

2019/5/31

NEWS NO.	DATE	COMMENT
PE0-MC-150085	Oct.,26,2015	COR:YXZ10YPSG(2HC1/2/3)FIG.13,15 LIST/ILLUST. CORRECTION
PE0-MC-150098	Dec.,2,2015	COR:YXZ10YPSG(2HC1/2/3)FIG.46 ILLUST. CORRECTION
PE0-MC-160027	Apr.,8,2016	MOD:YXZ10(2HC1_9) FIG.14 TRANSMISSION LIST REVISION
PE0-MC-160035	Apr.,21,2016	MOD:YXZ10(2HC*) FIG. 28 REAR SUSPENSION LIST REVISION
PE0-MC-160040	Apr.,21,2016	MOD:YXZ10(2HC*) FIG. 54 ELECTRICAL 3 LIST REVISION

POWER PARTS By 4xQUAD

NEWS NO.	DATE	COMMENT
PE0-MC-160083	Aug.,8,2016	MOD:YXZ10(2HC/B57) EMBLEM LABEL 1 LIST/ILLUST. REVISION
PE0-MC-160119	Sep.,22,2016	COR:YXZ1000R(2HC/B57)FIG.34,35,37,38 LIST CORRECTION
PE0-MC-190028	May,22,2019	COR:2HC,B57,B0F FRONT/REAR BRAKE CALIPER LIST/ILLUST.CORRECTION

POWER PARTS By SUAD

YXZ10YPSG
PARTS CATALOGUE
©2015 by Yamaha Motor Co., Ltd.
1st edition, September 2015
All rights reserved.
Any reprinting or unauthorized use
without the written permission of
Yamaha Motor Co., Ltd.
is expressly prohibited.
Printed in Japan.

POWER PARTS By 4x4UAD

FOREWORD

This Parts Catalogue is related to the parts for the model(s) on the cover page. When you are ordering replacement parts, please refer to this Parts Catalogue and quote both part numbers and part names correctly.

1. Modifications or additions which have been made after the issue of the Parts Catalogue will be announced in the Parts News.
   It is advisable that you make the necessary corrections to the Parts Catalogue according to the Parts News.

2. Abbreviations
   The following abbreviations are used in this Parts Catalogue.

   “UR” Use specified parts number.
   “UN” Use as many as needed.
   “AP” Alternate Parts
   “LM” Locally Made (Parts need to be ordered locally)
   “F#” Frame No. (Applicable machine No.)
   “O/S” Over Size

3. The number of components for assembly
   - Parts, which are to be supplied in an assembly, are listed with a dot (.) in front of the part name as shown below.
   - The numeral appearing to the right of each component part indicates the quantity of parts for each assembly unit.

PART NO.	DESCRIPTION	Q’TY	REMARKS
2F5–83310–60	FRONT FLASHER LIGHT ASSY	2	
115–83311–60	.BULB (6V–18W)	1	

4. Applicable colours of graphics are represented in the “REMARKS” as shown below.

PART NO.	DESCRIPTION	Q’TY	REMARKS
2N4–24110–00–X5	FUEL TANK COMP.	2	MXR
3J1–24240–10	.GRAPHIC, FUEL TANK	1	FOR MXR

5. Note that the illustrations for reference in finding parts numbers are not to be used for assembling. When assembling, please use the applicable service manual.

6. The asterisk (*) before a reference number indicates modified items after the first edition.

POWER PARTS By 4x4UAE

7. Applicable Serial No.

Engine Serial No.

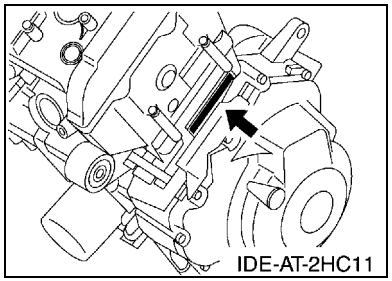

Frame Serial No.

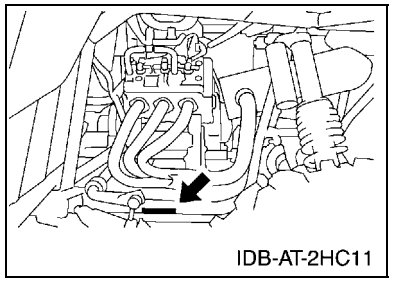

8. Applicable Colour Code (The (*) mark shows Model colour.)

Abbreviation	Colour Name	Colour Code
BWS1(*)	BLUISH WHITE SOLID 1	0892

9. Quantity Column Information

Column No.	Name Of Q'ty Column	Destination
1	USA	U.S.A.

POWER PARTS By 4x4UAD

MODEL LABEL

(1) A label called “Model Label” is affixed in the location as indicated in (3) below.
When using this parts catalogue, please be sure to cross–reference the “model code – production code No.” in the catalogue with the “model code – production code No.” indicated on the Model Label affixed onto the product concerned.

(2) “Model Label” Indication

○	xxxx – xxx (a – b)
●	x (c)

a: Model Type Code
b: Production Code No.
c: Colouring Type

○	4TW1–010
●	A

(3) Model Label Affixing Location

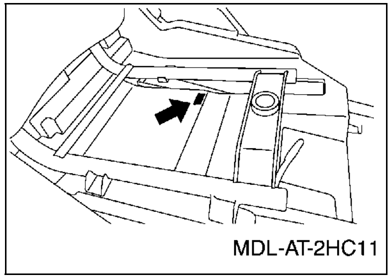

(4) Colouring Information

Model Code	Colouring Type Code	Colour Code	Colour Name	Abbrevia-tion
2HC1	U	0892	BLUISH WHITE SOLID 1	BWS1

(5) Model Code – Production Code Number of Model Listed in This Parts Catalogue

Model Code	Production Code No.	Country (destination)	Model Code	Production Code No.	Country (destination)
2HC1	010	U.S.A.			

POWER PARTS

CONTENTS

ENGINE

CYLINDER 1
CRANKSHAFT & PISTON 3
VALVE 6
CAMSHAFT & CHAIN 8
WATER PUMP 9
RADIATOR & HOSE 11
OIL PUMP 13
INTAKE 15
THROTTLE BODY ASSY 1 17
EXHAUST 19
CRANKCASE 20
STARTER CLUTCH 22
CLUTCH 23
TRANSMISSION 25
TRANSFER 27
MIDDLE DRIVE GEAR 29
SHIFT CAM & FORK 31
SHIFT SHAFT 32

CHASSIS

FRAME 33
FRONT FENDER 34
SIDE COVER 36
SIDE COVER 2 38
SIDE COVER 3 39
OIL TANK 41
REAR ARM 42
DRIVE SHAFT 44
FRONT DIFFERENTIAL 46
REAR SUSPENSION 48
FRONT SUSPENSION & WHEEL 49
STEERING 51
FUEL TANK 54
SEAT 56
SEAT 2 57
FRONT WHEEL 58
FRONT WHEEL 2 60
FRONT BRAKE CALIPER 62
REAR WHEEL 63
REAR WHEEL 2 65
REAR BRAKE CALIPER 67
REAR BRAKE CALIPER 2 68
PEDAL WIRE 70
MASTER CYLINDER 72
STAND & FOOTREST 74
CARRIER 75
GUARD 77
GUARD 2 78
GENERATOR 79
STARTING MOTOR 80
METER 81
HEADLIGHT 82
TAILLIGHT 83
ELECTRICAL 1 84
ELECTRICAL 2 86
ELECTRICAL 3 87
GRAPHICS 88
EMBLEM & LABEL 1 89

INDEX

NUMERICAL INDEX 90

POWER PARTS

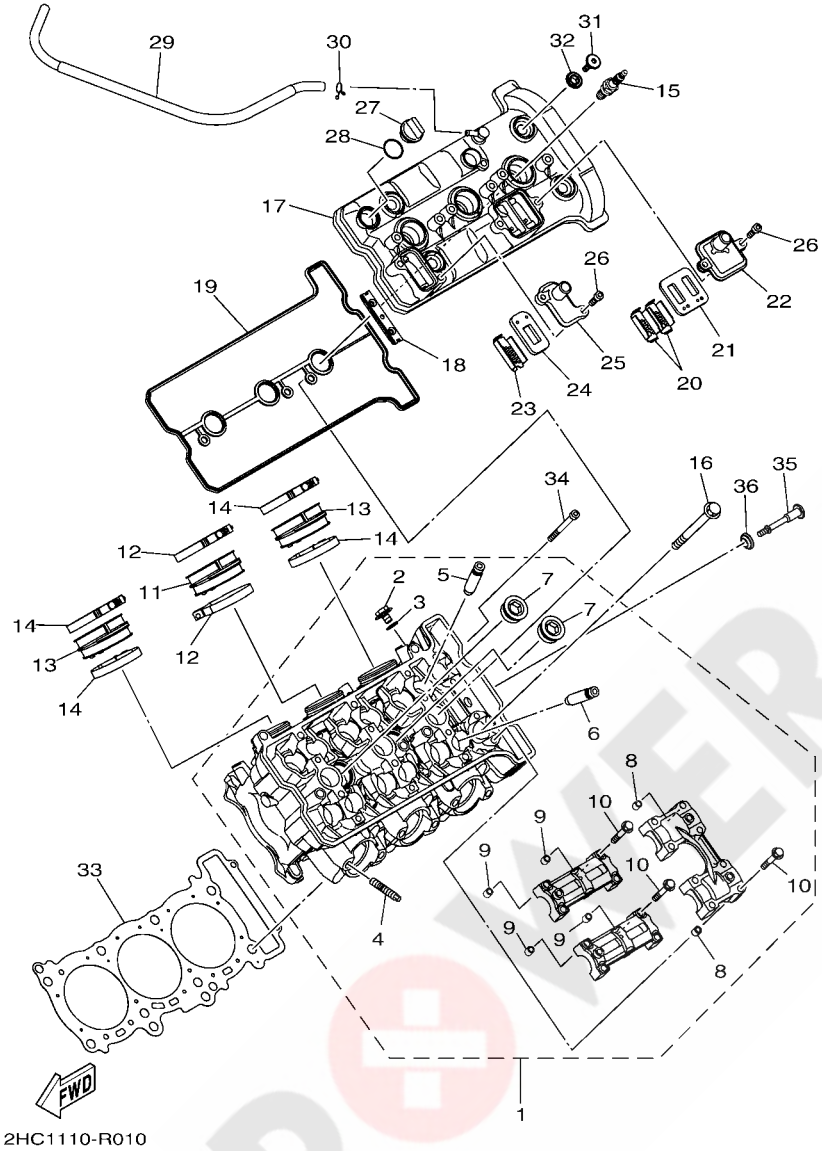

FIG. 1 CYLINDER

REF. NO.	PART NO.	DESCRIPTION	USA					REMARKS
1	2HC–11101–09	CYLINDER HEAD ASSY	1					
2	95022–08012	.BOLT, FLANGE	1					
3	90430–08119	.GASKET	1					
4	90116–08087	.BOLT, STUD	6					
5	2C0–11133–11	.GUIDE, VALVE 1	6					
6	8HF–11134–10	.GUIDE, VALVE 2	6					
7	90340–27129	.PLUG, STRAIGHT SCREW	2					
8	91808–16023	.PIN, DOWEL	2					
9	91808–16023	.PIN, DOWEL	4					
10	90105–06027	.BOLT, FLANGE	16					
11	8HF–13595–00	JOINT	1					
12	90450–60004	HOSE CLAMP ASSY	2					
13	8HF–13595–00	JOINT	2					
14	90450–60004	HOSE CLAMP ASSY	4					
15	94702–00409	PLUG, SPARK (NGK CR9EB)	3					
16	90119–10004	BOLT, WITH WASHER	8					
17	2HC–11191–00	COVER, CYLINDER HEAD 1	1					
18	5BE–12241–00	GUIDE, STOPPER 2	1					
19	2HC–11193–00	GASKET, HEAD COVER 1	1					
20	5VY–1482K–00	PLATE	2					
21	5SL–14890–00	REED VALVE ASSY	1					
22	5VY–14899–01	CAP, CASE	1					
23	5JW–1482K–01	PLATE	1					
24	5JW–14890–00	REED VALVE ASSY	1					
25	2HC–14889–00	CAP, CASE	1					
26	90110–06175	BOLT, HEXAGON SOCKET HEAD	4					
27	3Y1–15363–10	PLUG, OIL	1					

POWER PARTS By 4QUAD

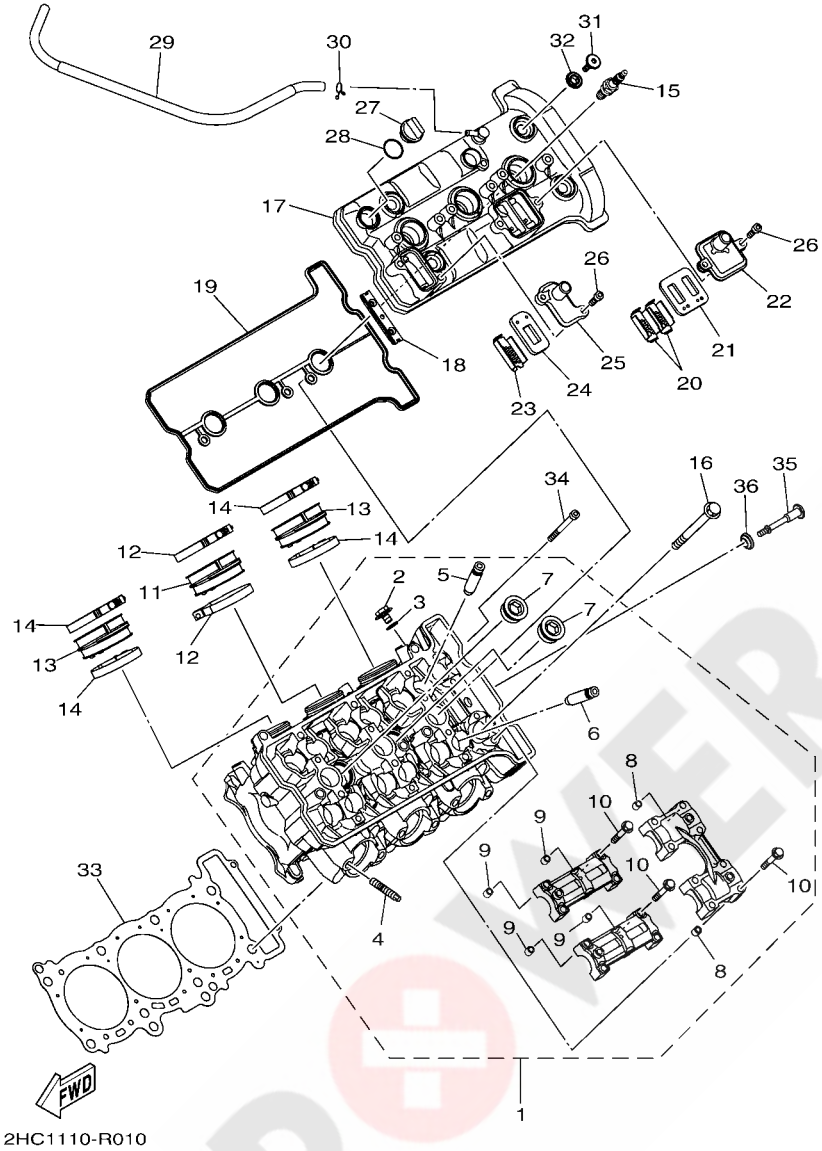

FIG. 1 CYLINDER

REF. NO.	PART NO.	DESCRIPTION	USA					REMARKS
28	93210–19123	O-RING	1					
29	2HC–11166–00	PIPE, BREATHER 1	1					
30	90467–100A1	CLIP	1					
31	90109–066F0	BOLT	4					
32	5VY–1111G–00	RUBBER, MOUNT 1	4					
33	2HC–11181–00	GASKET, CYLINDER HEAD 1	1					
34	91312–06065	BOLT	2					
35	90109–06293	BOLT	1					
36	5VY–1111G–00	RUBBER, MOUNT 1	1					

POWER PARTS By AXQUAD

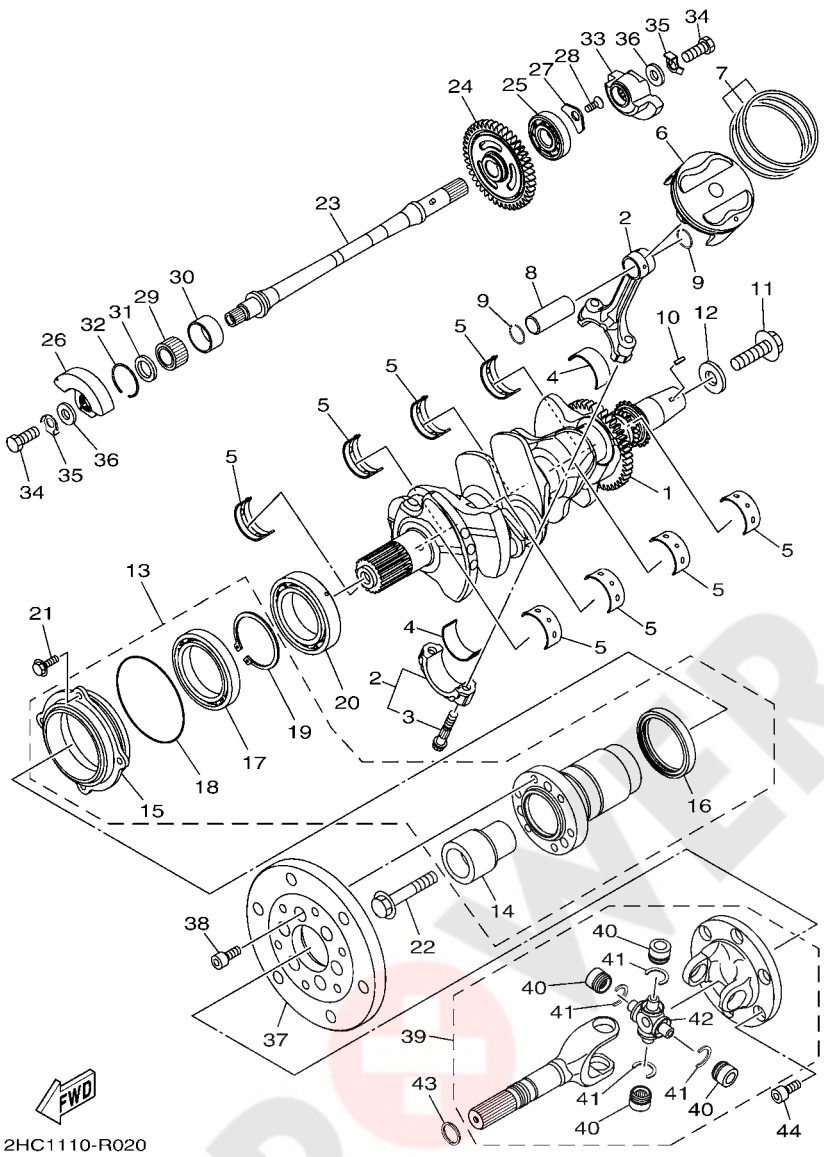

FIG. 2 CRANKSHAFT & PISTON

REF. NO.	PART NO.	DESCRIPTION	USA					REMARKS
1	2HC–11400–00	CRANKSHAFT ASSY	1					
2	2HC–11650–00	CONNECTING ROD ASSY	3					
3	5PX–11654–00	.BOLT, CONNECTING ROD	2					
4	5JW–11656–00	PLANE BEARING, CONNECTING ROD	6					UR BLUE
	5JW–11656–10	PLANE BEARING, CONNECTING ROD	6					UR BLACK
	5JW–11656–20	PLANE BEARING, CONNECTING ROD	6					UR BROWN
	5JW–11656–30	PLANE BEARING, CONNECTING ROD	6					UR GREEN
	5JW–11656–40	PLANE BEARING, CONNECTING ROD	6					UR YELLOW
	5JW–11656–50	PLANE BEARING, CONNECTING ROD	6					UR PINK
5	3LD–11416–10	PLANE BEARING, CRANKSHAFT 1	8					UR BLACK
	3LD–11416–20	PLANE BEARING, CRANKSHAFT 1	8					UR BROWN
	3LD–11416–30	PLANE BEARING, CRANKSHAFT 1	8					UR GREEN
	3LD–11416–40	PLANE BEARING, CRANKSHAFT 1	8					UR YELLOW
	3LD–11416–50	PLANE BEARING, CRANKSHAFT 1	8					UR PINK
	3LD–11416–60	PLANE BEARING, CRANKSHAFT 1	8					UR RED
	3LD–11416–70	PLANE BEARING, CRANKSHAFT 1	8					UR WHITE
6	2HC–11631–00	PISTON (STD)	3					
7	2HC–11603–00	PISTON RING SET (STD)	3					
8	2HC–11633–00	PIN, PISTON	3					
9	93450–19095	CIRCLIP	6					
10	90280–03045	KEY, WOODRUFF	1					
11	90105–12032	BOLT, FLANGE	1					
12	90201–121H0	WASHER, PLATE	1					
13	2HC–11406–00	SHAFT ASSY	1					
14	2HC–11478–00	.COLLAR	1					
15	2HC–16775–00	.HOUSING, BEARING	1					
16	93105–57007	.OIL SEAL	1					

POWER PARTS

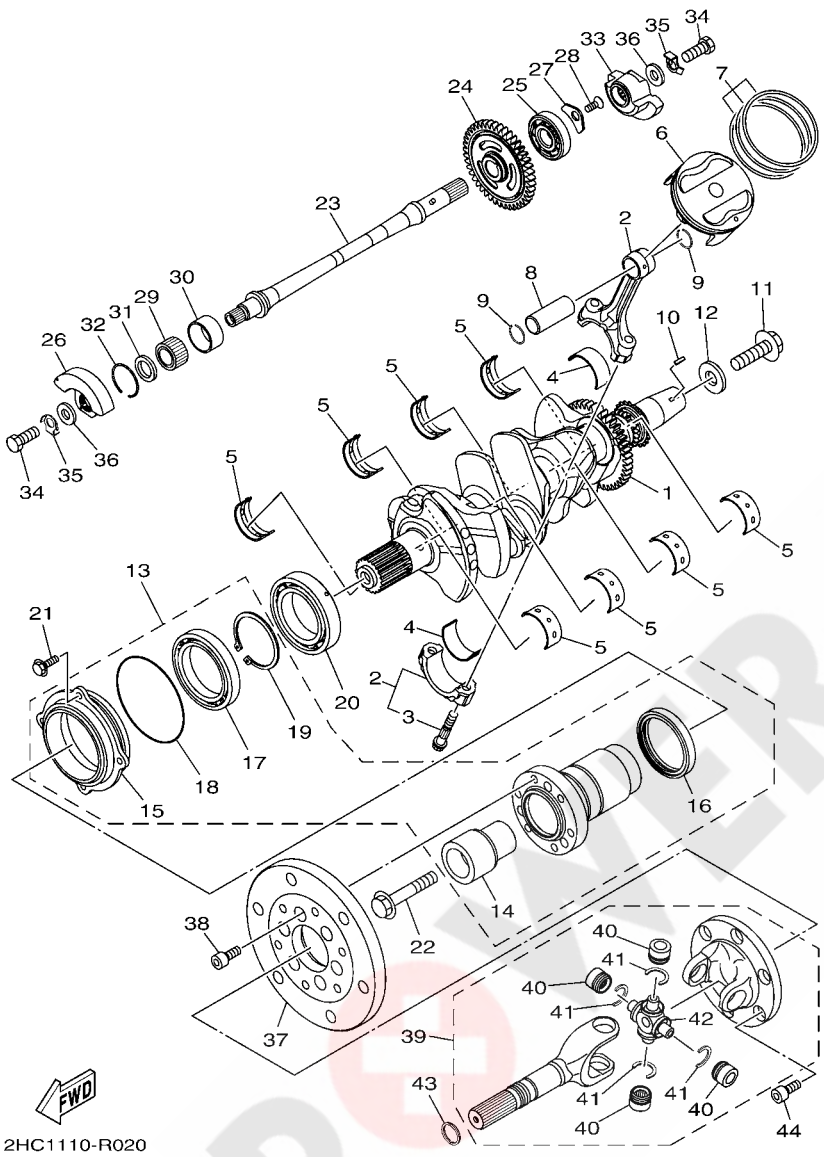

FIG. 2 CRANKSHAFT & PISTON

REF. NO.	PART NO.	DESCRIPTION	USA					REMARKS
17	93306–91102	.BEARING	1					
18	93210–84724	.O-RING	1					
19	99009–55400	.CIRCLIP	1					
20	93306–01005	BEARING	1					
21	95812–06020	BOLT, FLANGE	4					
22	90105–12099	BOLT, FLANGE	1					
23	2HC–11407–00	SHAFT ASSY., 2	1					
24	2HC–11530–00	BALANCER WEIGHT GEAR COMP.	1					
25	93306–30323	BEARING	1					
26	8ES–11454–00	WEIGHT 1	1					
27	4JT–15381–01	PLATE, BEARING COVER	1					
28	90151–06024	SCREW, COUNTERSUNK	1					
29	93310–42239	BEARING	1					
30	8ES–11428–01	BEARING 1	1					
31	8ES–11478–00	COLLAR	1					
32	93450–32152	CIRCLIP	1					
33	2HC–11464–00	WEIGHT 2	1					
34	97012–10025	BOLT	2					
35	90215–10003	WASHER, LOCK	2					
36	90201–10591	WASHER, PLATE	2					
37	2HC–11571–00	FLYWHEEL	1					
38	91312–08020	BOLT	6					
39	2HC–43804–00	YOKE ASSY	1					
40	93399–99948	.BEARING	4					
41	93440–20088	.CIRCLIP	4					
42	2HC–46187–00	.SPIDER	1					
43	93210–192A6	O-RING	1					

POWER PARTS For 4x4 QUAD

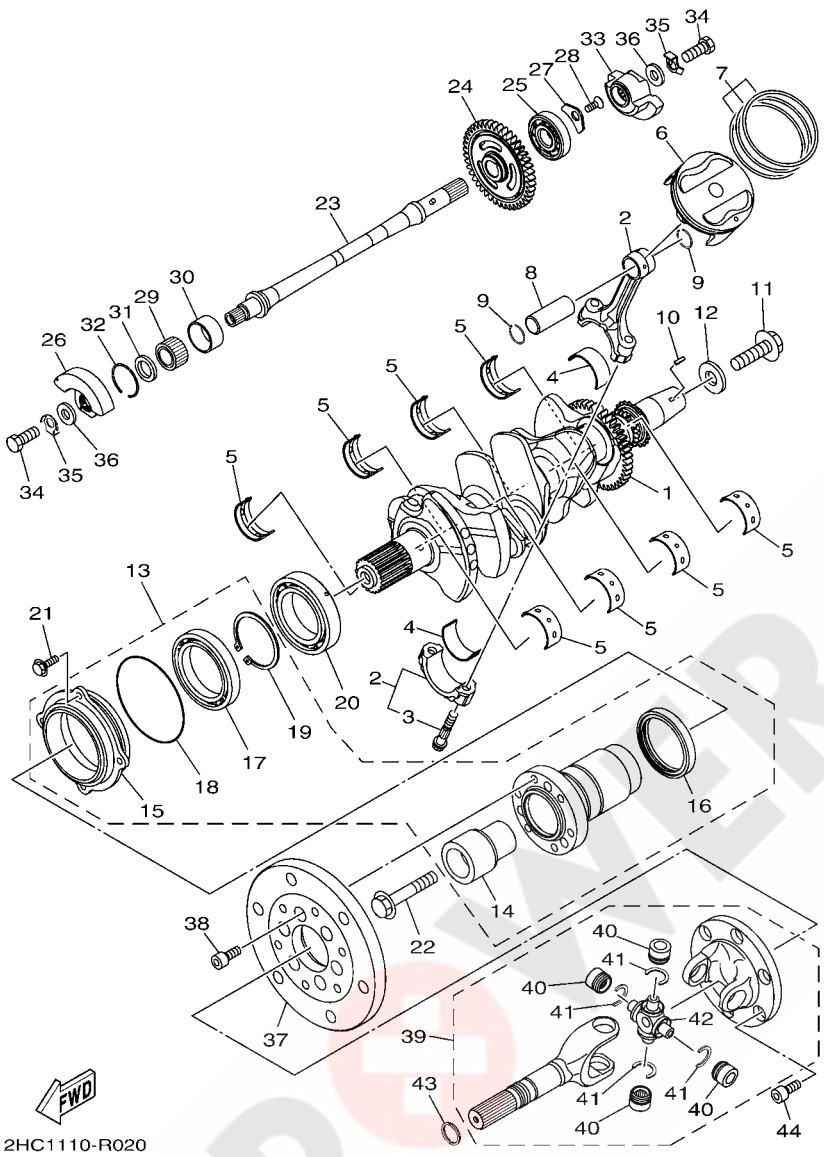

FIG. 2 CRANKSHAFT & PISTON

REF. NO.	PART NO.	DESCRIPTION	USA					REMARKS
44	91312–08020	BOLT	6					

POWER PARTS By 4xQUAD

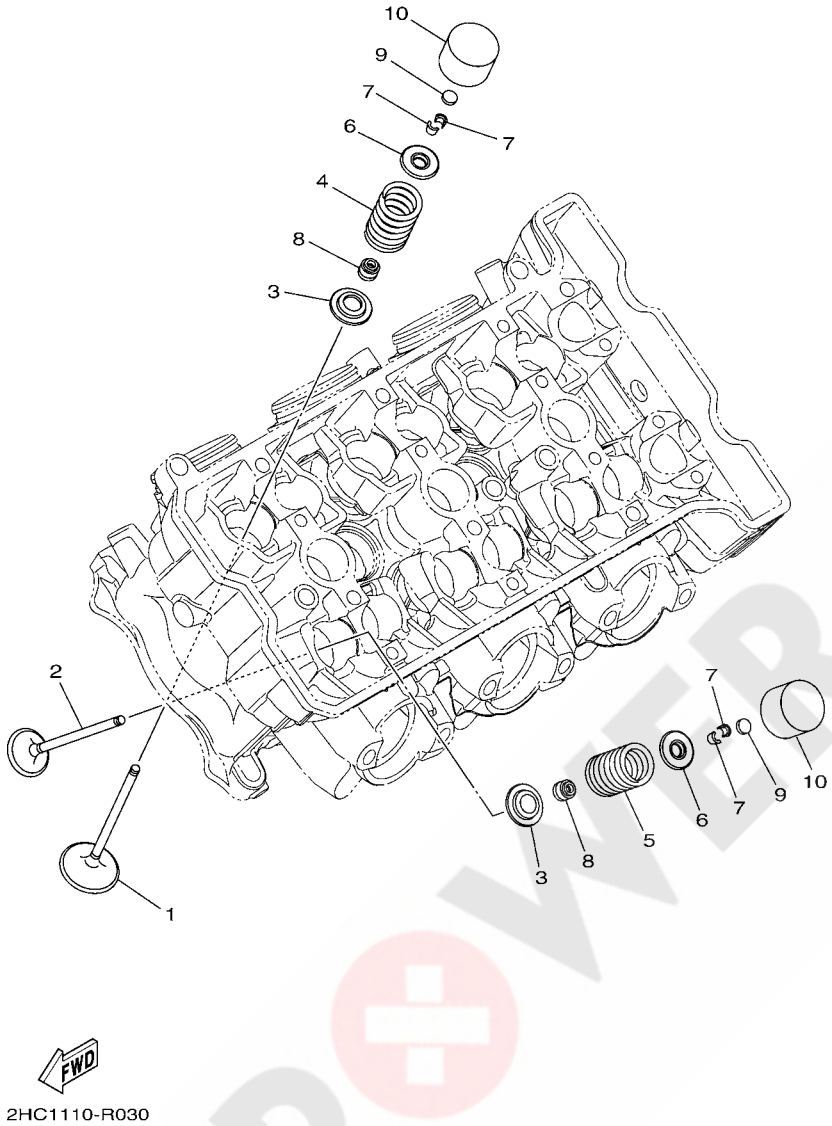

FIG. 3 VALVE

REF. NO.	PART NO.	DESCRIPTION	USA					REMARKS
1	8GL–12111–10	VALVE, INTAKE	6					
2	8GL–12121–10	VALVE, EXHAUST	6					
3	1RC–12116–00	SEAT, VALVE SPRING	12					
4	2HC–12113–00	SPRING, VALVE INNER	6					
5	2HC–12114–00	SPRING, VALVE OUTER	6					
6	3D7–12117–00	RETAINER, VALVE SPRING	12					
7	1WG–12118–00	LOCK, VALVE SPRING RETAINER	24					
8	2HC–12119–00	SEAL, VALVE STEM	12					
9	1HX–12168–00	PAD, ADJUSTING 2 (1.20)	12					UR
	1HX–12168–20	PAD, ADJUSTING 2 (1.25)	12					UR
	1HX–12168–40	PAD, ADJUSTING 2 (1.30)	12					UR
	1HX–12168–60	PAD, ADJUSTING 2 (1.35)	12					UR
	1HX–12168–80	PAD, ADJUSTING 2 (1.40)	12					UR
	1HX–12168–A0	PAD, ADJUSTING 2 (1.45)	12					UR
	1HX–12168–F0	PAD, ADJUSTING 2 (1.50)	12					UR
	1HX–12168–H1	PAD, ADJUSTING 2 (1.55)	12					UR
	1HX–12168–K1	PAD, ADJUSTING 2 (1.60)	12					UR
	1HX–12168–M1	PAD, ADJUSTING 2 (1.65)	12					UR
	1HX–12168–R1	PAD, ADJUSTING 2 (1.70)	12					UR
	1HX–12168–U1	PAD, ADJUSTING 2 (1.75)	12					UR
	1HX–12168–W1	PAD, ADJUSTING 2 (1.80)	12					UR
	1HX–12168–Y1	PAD, ADJUSTING 2 (1.85)	12					UR
	1HX–12169–11	PAD, ADJUSTING 2 (1.90)	12					UR
	1HX–12169–31	PAD, ADJUSTING 2 (1.95)	12					UR
	1HX–12169–50	PAD, ADJUSTING 2 (2.00)	12					UR
	1HX–12169–70	PAD, ADJUSTING 2 (2.05)	12					UR
	1HX–12169–90	PAD, ADJUSTING 2 (2.10)	12					UR

POWER PARTS By SQUAD

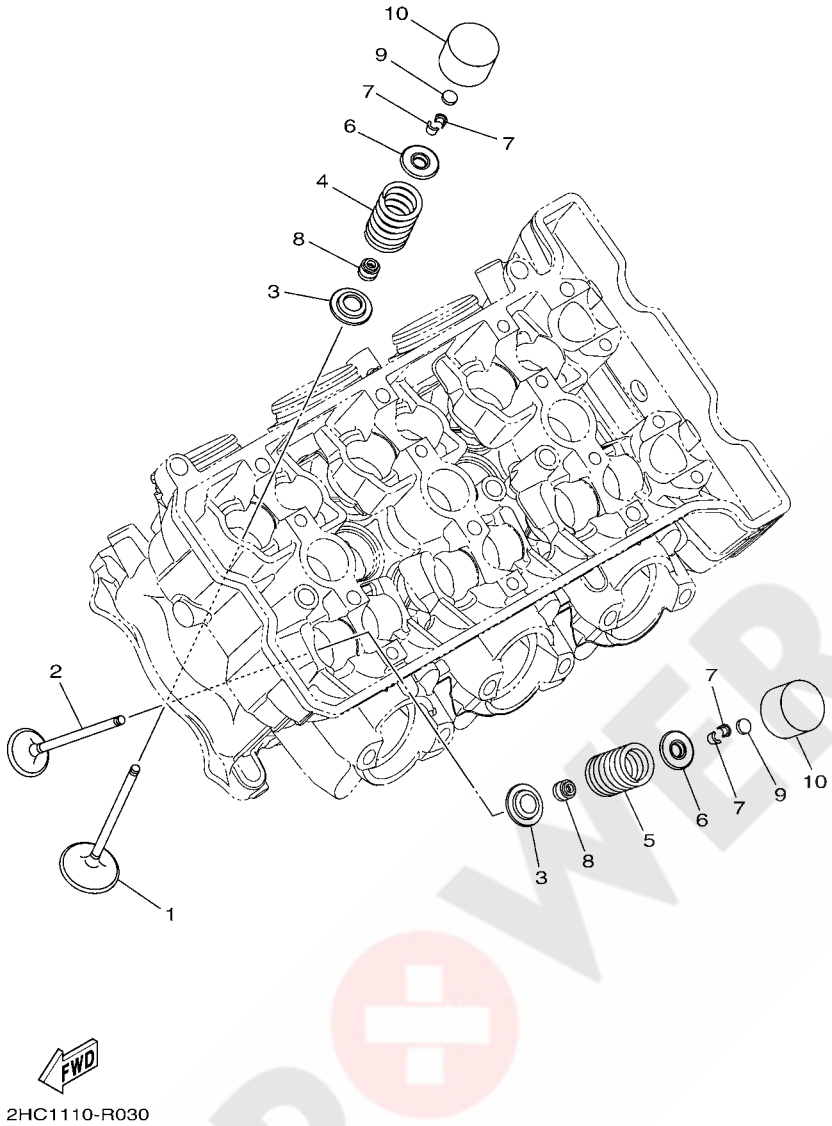

FIG. 3 VALVE

REF. NO.	PART NO.	DESCRIPTION	USA					REMARKS
9	1HX–12169–E0	PAD, ADJUSTING 2 (2.15)	12					UR
	1HX–12169–G0	PAD, ADJUSTING 2 (2.20)	12					UR
	1HX–12169–J0	PAD, ADJUSTING 2 (2.25)	12					UR
	1HX–12169–L0	PAD, ADJUSTING 2 (2.30)	12					UR
	1HX–12169–N0	PAD, ADJUSTING 2 (2.35)	12					UR
	1HX–12169–T0	PAD, ADJUSTING 2 (2.40)	12					UR
10	4C8–12153–10	LIFTER, VALVE	12					UR YELLOW
	4C8–12153–09	LIFTER, VALVE (O/S)	12					UR GREEN

POWER PARTS By 4QUAD

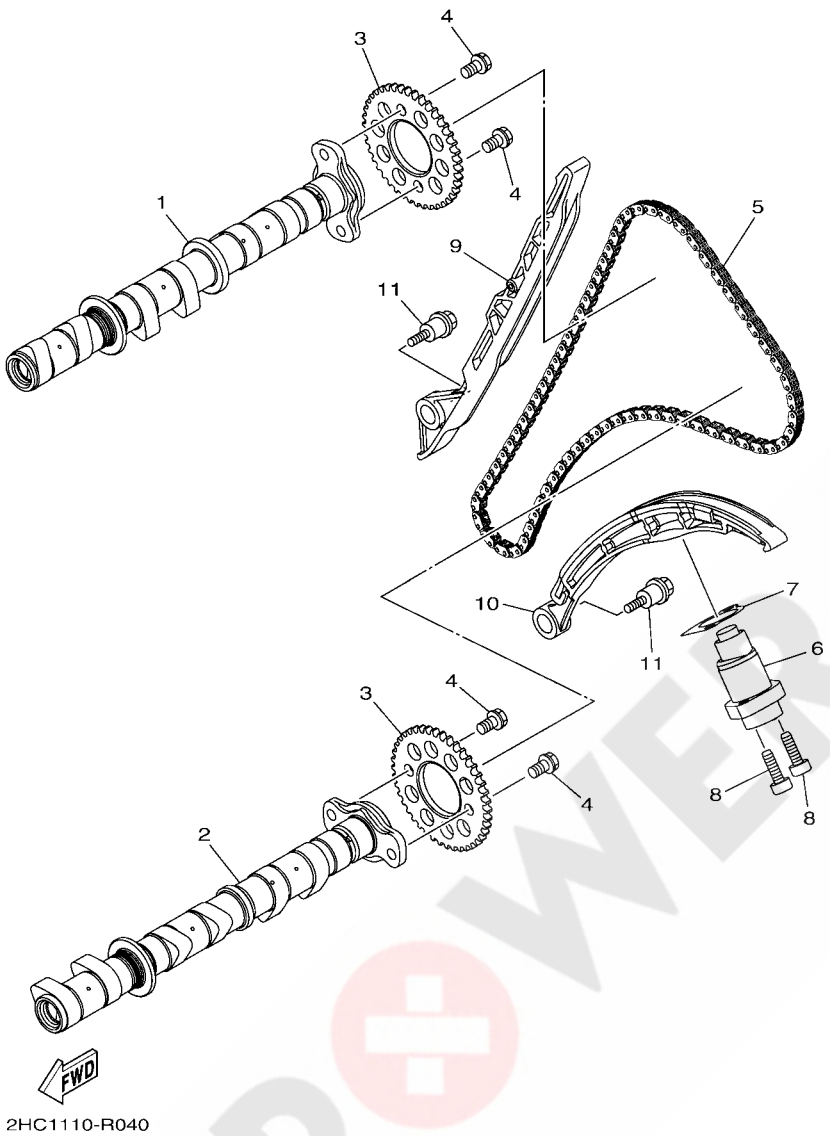

FIG. 4 CAMSHAFT & CHAIN

REF. NO.	PART NO.	DESCRIPTION	USA					REMARKS
1	2HC–12170–00	CAMSHAFT ASSY 1	1					
2	2HC–12180–00	CAMSHAFT ASSY 2	1					
3	2HC–12176–00	SPROCKET, CAM CHAIN	2					
4	90105–07004	BOLT, FLANGE	4					
5	94591–57140	CHAIN (98RH2010-140M)	1					
6	2HC–12210–00	TENSIONER ASSY, CAM CHAIN	1					
7	2C0–12213–00	GASKET, TENSIONER CASE	1					
8	90110–06335	BOLT, HEXAGON SOCKET HEAD	2					
9	8GL–12251–01	DAMPER, CHAIN 1	1					
10	2HC–12252–00	DAMPER, CHAIN 2	1					
11	90109–06295	BOLT	2					

POWER PARTS By SQUAD

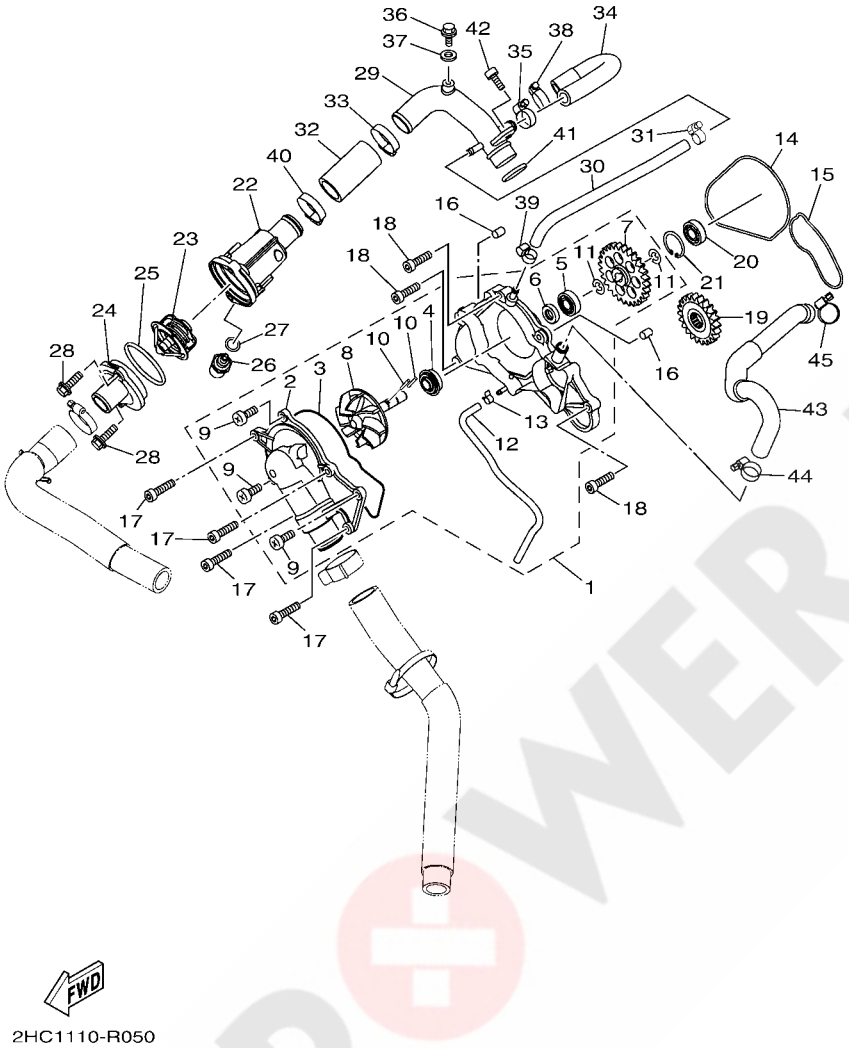

FIG. 5 WATER PUMP

REF. NO.	PART NO.	DESCRIPTION	USA					REMARKS
1	2HC–12420–00	WATER PUMP ASSY	1					
2	2HC–12422–00	.COVER, HOUSING	1					
3	8ES–12427–00	.GASKET, HOUSING COVER 1	1					
4	8ES–12438–00	.SEAL, MECHANICAL	1					
5	93306–00006	.BEARING	1					
6	93102–10207	.OIL SEAL (SD 10-21-5 HS)	1					
7	8ES–12459–01	.GEAR, IMPELLER SHAFT	1					
8	8ES–12450–01	.IMPELLER SHAFT ASSY	1					
9	98502–06016	.SCREW, PAN HEAD	3					
10	93604–16092	.PIN, DOWEL	2					
11	99002–08600	.CIRCLIP	2					
12	2HC–1243A–00	.HOSE 1	1					
13	90467–07093	.CLIP	1					
14	8ES–12435–00	GASKET	1					
15	8ES–12434–00	GASKET	1					
16	99530–08012	PIN, DOWEL	2					
17	91312–06040	BOLT	4					
18	91312–06025	BOLT, HEXAGON SOCKET HEAD	3					
19	8ES–12436–00	GEAR, DRIVE	1					
20	93306–00006	BEARING	1					
21	93420–26077	CIRCLIP	1					
22	2HC–12417–00	HOUSING, THERMOSTAT	1					
23	5LP–12411–00	THERMOSTAT	1					
24	4NX–12413–00	COVER, THERMOSTAT	1					
25	93210–49046	O-RING	1					
26	5YP–85790–00	THERMOSENSOR ASSY	1					
27	90201–12790	WASHER, PLATE	1					

POWER PARTS By SQUAD

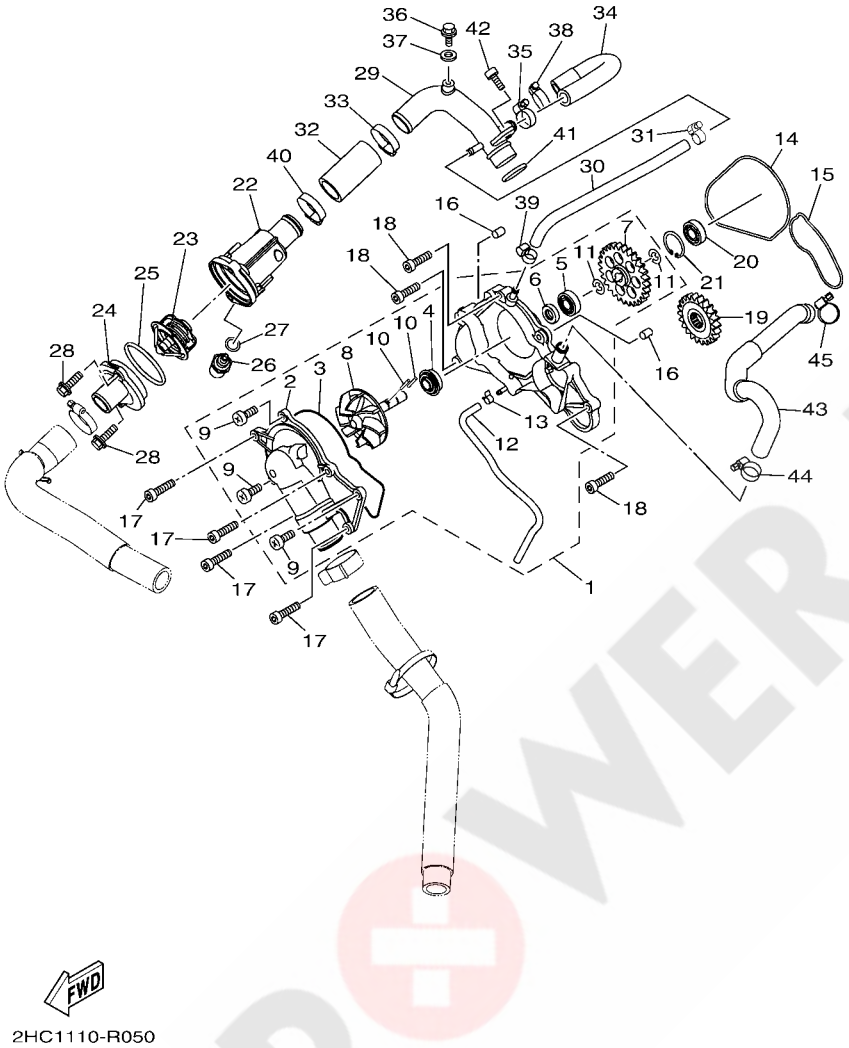

FIG. 5 WATER PUMP

REF. NO.	PART NO.	DESCRIPTION	USA					REMARKS
28	95022–06020	BOLT, FLANGE	2					
29	2HC–12482–00	PIPE 2	1					
30	8GL–12485–00	PIPE 5	1					
31	90450–17001	HOSE CLAMP ASSY	1					
32	8FA–12551–00	HOSE 7	1					
33	90450–35001	HOSE CLAMP ASSY	1					
34	2HC–12589–00	HOSE 6	1					
35	90450–19001	HOSE CLAMP ASSY	1					
36	95022–06012	BOLT, FLANGE	1					
37	90430–06014	GASKET	1					
38	90450–22M14	HOSE CLAMP ASSY	1					
39	90450–17001	HOSE CLAMP ASSY	1					
40	90450–35001	HOSE CLAMP ASSY	1					
41	93210–235A1	O-RING	1					
42	90110–06310	BOLT, HEXAGON SOCKET HEAD	1					
43	2HC–12588–00	HOSE 5	1					
44	90450–19001	HOSE CLAMP ASSY	1					
45	90450–22M14	HOSE CLAMP ASSY	1					

POWER PARTS By MXQUAD

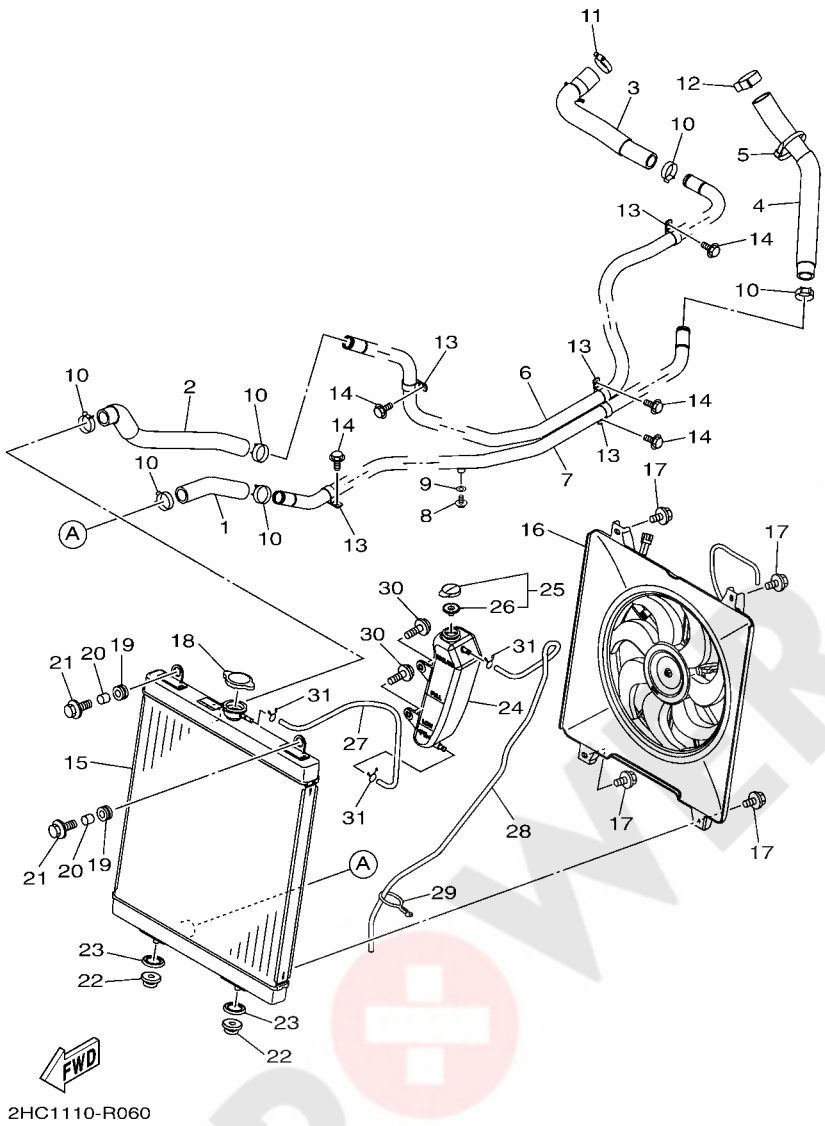

2HC1110-R060

FIG. 6 RADIATOR & HOSE

REF. NO.	PART NO.	DESCRIPTION	USA					REMARKS
1	2HC–E2576–00	HOSE 1	1					
2	2HC–E2577–00	HOSE 2	1					
3	2HC–E2578–00	HOSE 3	1					
4	2HC–E2579–00	HOSE 4	1					
5	90464–12045	CLAMP	1					
6	2HC–E2564–00	PIPE, WATER	1					
7	2HC–E2483–00	PIPE 3	1					
8	95022–06008	BOLT, FLANGE	1					
9	90430–06014	GASKET	1					
10	90467–26189	CLIP	6					
11	90450–35001	HOSE CLAMP ASSY	1					
12	90467–310A0	CLIP	1					
13	90461–12800	CLAMP	5					
14	90105–06831	BOLT, FLANGE	5					
15	2HC–E2461–00	RADIATOR COMP	1					
16	2HC–E2405–00	BLOWER ASSY	1					
17	1XD–E2675–00	BOLT, BLOWER HOLDING	4					
18	1XD–E2462–00	CAP, RADIATOR	1					
19	90480–15235	GROMMET	2					
20	90387–06113	COLLAR	2					
21	JW1–K6179–01	BOLT, SPECIAL 1	2					
22	90480–18004	GROMMET	2					
23	90209–24011	WASHER	2					
24	5B4–F1871–01	TANK, RECOVERY	1					
25	1AA–21815–00	CAP	1					
26	1AA–21874–00	.GASKET	1					
27	90445–083J7	HOSE (L485)	1					

POWER PARTS By 4xQUAD

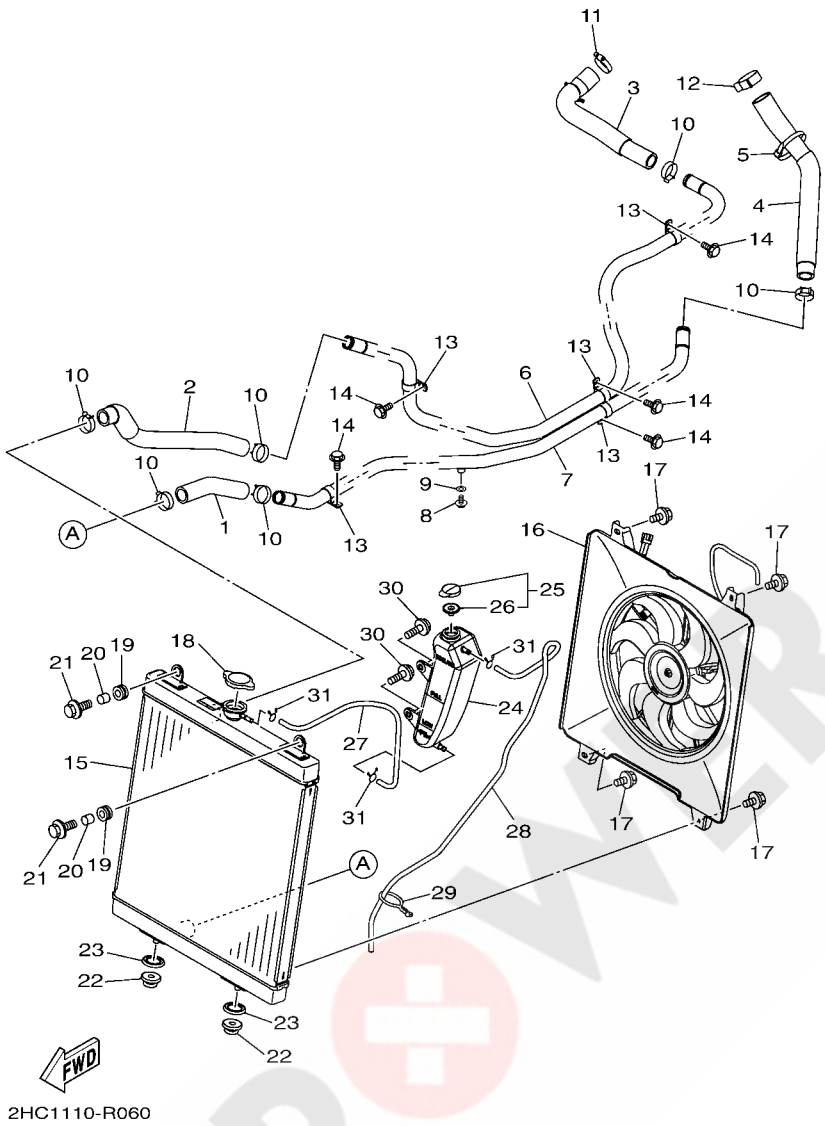

2HC1110-R060

FIG. 6 RADIATOR & HOSE

REF. NO.	PART NO.	DESCRIPTION	USA					REMARKS
28	90445–084J3	HOSE (L870)	1					
29	90464–37257	CLAMP	1					
30	90119–06868	BOLT, WITH WASHER	2					
31	90467–08003	CLIP	3					

POWER PARTS By 4xQUAD

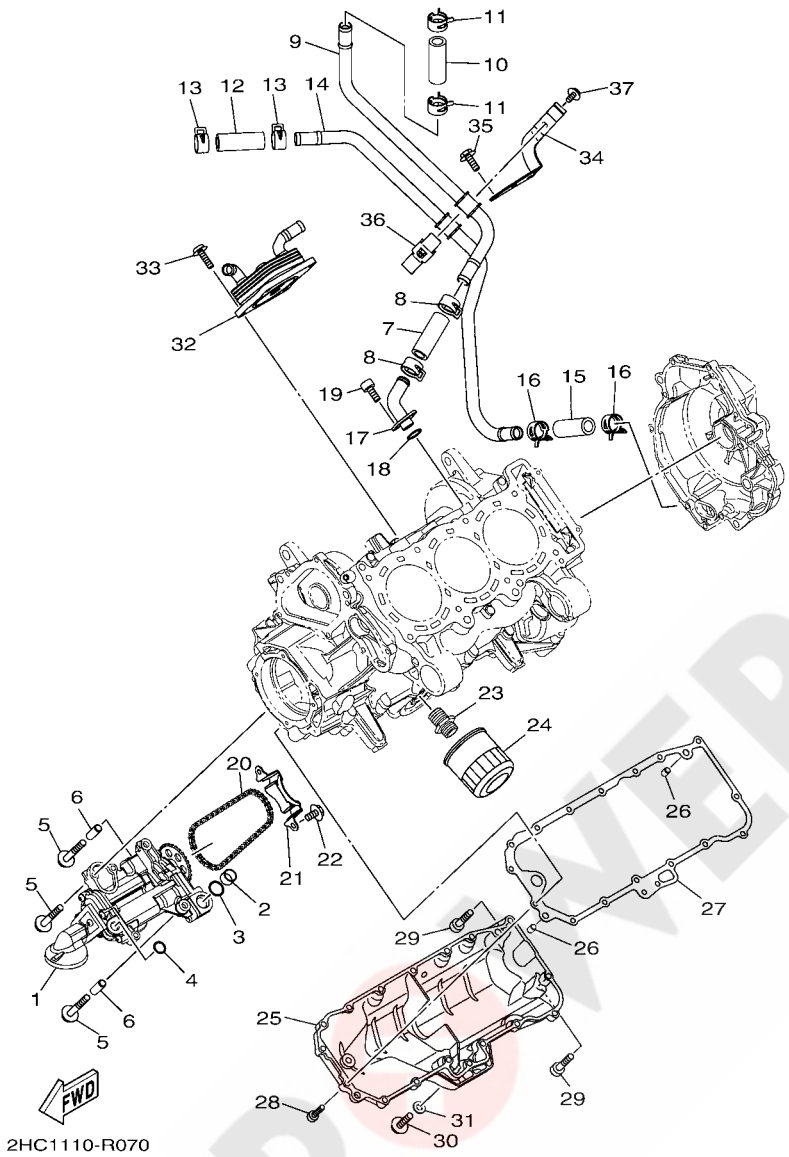

FIG. 7 OIL PUMP

REF. NO.	PART NO.	DESCRIPTION	USA					REMARKS
1	8GL–13300–00	OIL PUMP ASSY	1					
2	8ES–13284–00	PIPE	1					
3	93210–18322	O-RING	1					
4	93210–14579	O-RING	1					
5	95812–06040	BOLT, FLANGE	5					
6	91808–22019	PIN, DOWEL	2					
7	2HC–E3464–00	HOSE, OIL 1	1					
8	90467–22097	CLIP	2					
9	2HC–E3416–00	PIPE, OIL 1	1					
10	2HC–E3464–00	HOSE, OIL 1	1					
11	90467–22097	CLIP	2					
12	2HC–E3464–00	HOSE, OIL 1	1					
13	90467–22097	CLIP	2					
14	2HC–E3418–00	PIPE, OIL 2	1					
15	2HC–E3464–00	HOSE, OIL 1	1					
16	90467–22097	CLIP	2					
17	8ES–13115–00	CONNECTOR, SUCTION PIPE	1					
18	93210–16629	O-RING	1					
19	91312–06016	BOLT	2					
20	94580–25064	CHAIN (DID25 64LE)	1					
21	8ES–13898–00	HOLDER	1					
22	95812–06012	BOLT, FLANGE	2					
23	90401–20008	BOLT, UNION	1					
24	5GH–13440–50	ELEMENT ASSY, OIL CLEANER	1					
25	2HC–13417–00	COVER, STRAINER	1					
26	99530–08012	PIN, DOWEL	2					
27	2HC–13414–00	GASKET, STRAINER COVER	1					

POWER PARTS By 4xQUAD

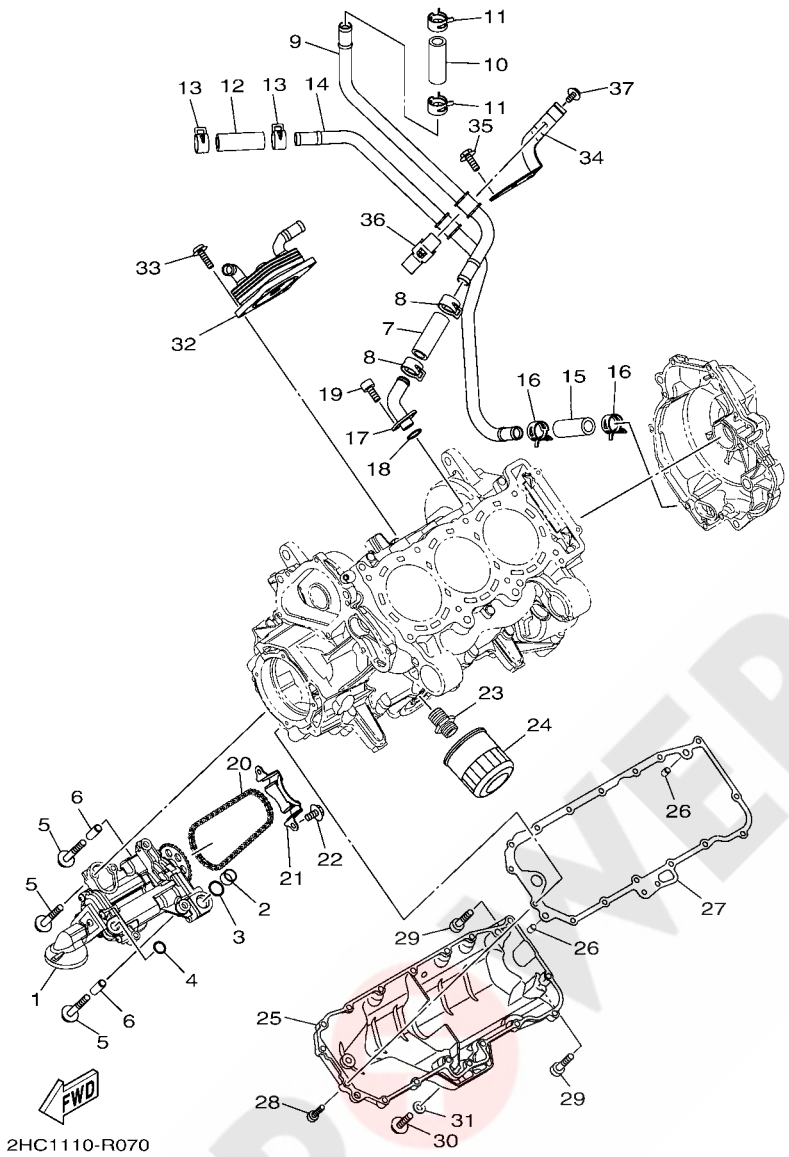

FIG. 7 OIL PUMP

REF. NO.	PART NO.	DESCRIPTION	USA					REMARKS
28	91312–06025	BOLT, HEXAGON SOCKET HEAD	15					
29	91317–06035	BOLT	2					
30	90109–06031	BOLT	1					
31	90430–06192	GASKET	1					
32	2HC–13470–00	OIL COOLER ASSY	1					
33	90110–06164	BOLT, HEXAGON SOCKET HEAD	4					
34	2HC–E3487–00	GUIDE, OIL HOSE	1					
35	95812–06016	BOLT, FLANGE	2					
36	2HC–E3499–00	GUIDE, OIL HOSE 2	1					
37	95812–06012	BOLT, FLANGE	1					

POWER PARTS By ATVQUAD

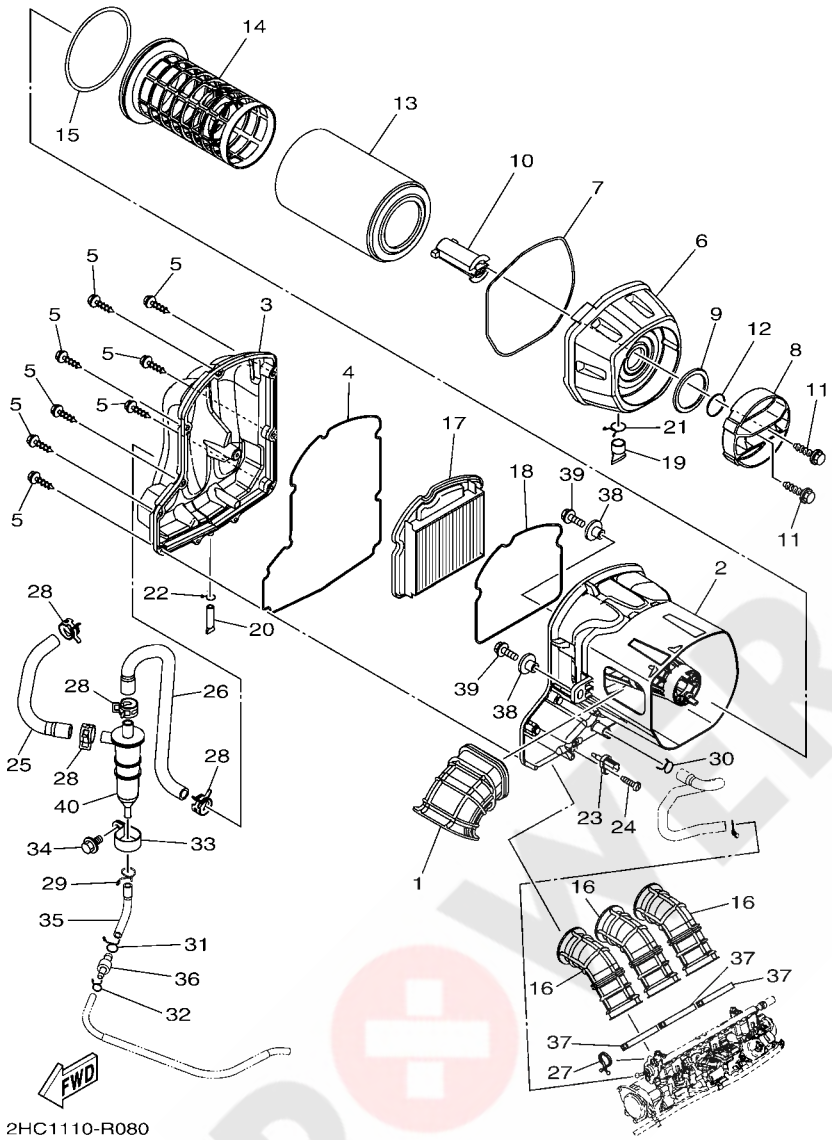

FIG. 8 INTAKE

REF. NO.	PART NO.	DESCRIPTION	USA					REMARKS
1	2HC–E4437–01	DUCT	1					
2	2HC–E4411–01	CASE, AIR CLEANER 1	1					
3	2HC–E4421–00	CASE, AIR CLEANER 2	1					
4	2HC–E4452–00	SEAL	1					
5	2HC–E4429–00	SCREW	11					
6	2HC–E4412–00	CAP, CLEANER CASE 1	1					
7	2HC–E4457–01	SEAL	1					
8	2HC–E4422–00	CAP, CLEANER CASE 2	1					
9	2HC–E4126–00	GASKET	1					
10	2HC–E445B–00	LEVER 1	1					
11	2HC–E4429–00	SCREW	2					
12	2HC–E4476–00	SEAL	1					
13	2HC–E4451–00	ELEMENT, AIR CLEANER	1					
14	2HC–E4458–00	GUIDE	1					
15	2HC–E4467–00	SEAL	1					
16	2HC–E4453–00	JOINT, AIR CLEANER 1	3					
17	2HC–E4461–00	ELEMENT, AIR CLEANER 2	1					
18	2HC–E4462–00	SEAL	1					
19	B16–E443E–00	PIPE, DRAIN	1					
20	4ST–E443E–00	PIPE, DRAIN	1					
21	90467–220A1	CLIP	1					
22	90467–110A3	CLIP	1					
23	8FP–85886–00	SENSOR, AIR TEMPERATURE	1					
24	97707–50520	SCREW, TAPPING	1					
25	2HC–F1745–00	PIPE, OIL TANK BREATHER	1					
26	2HC–F174N–00	PIPE, OIL TANK	1					
27	90464–23041	CLAMP	1					

POWER PARTS By 4xQUAD

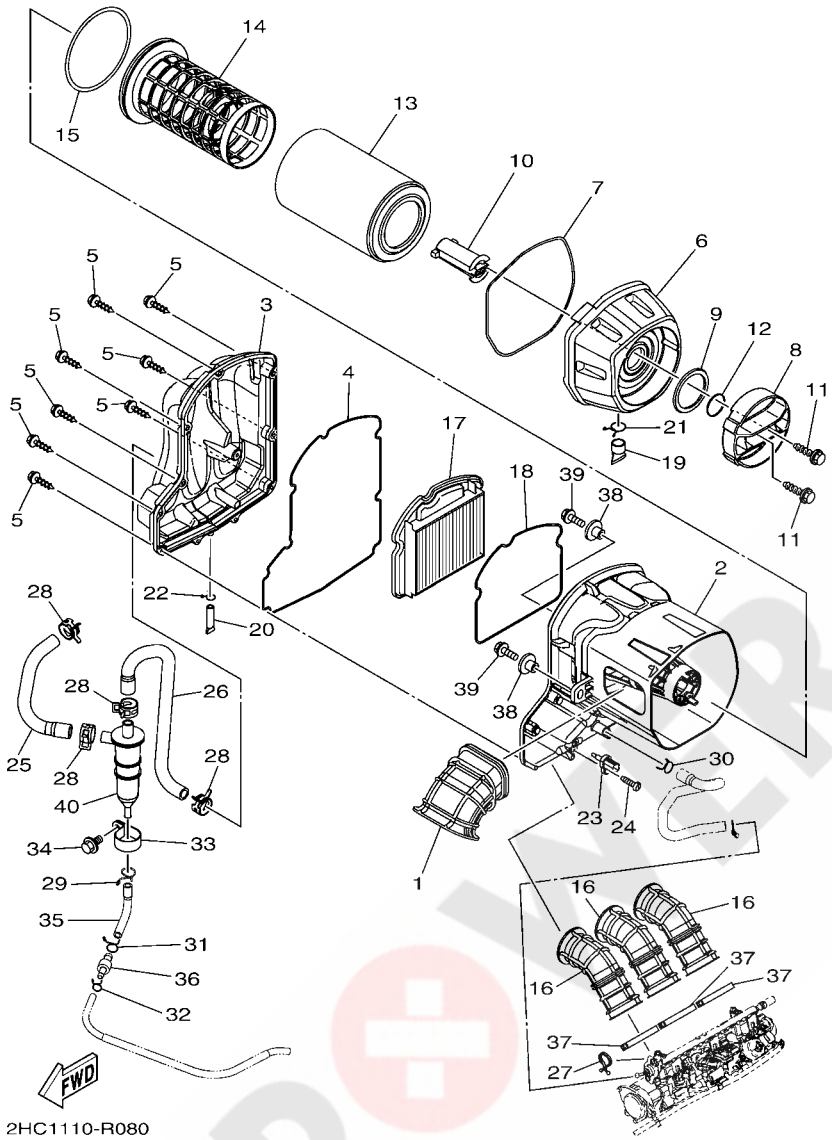

FIG. 8 INTAKE

REF. NO.	PART NO.	DESCRIPTION	USA					REMARKS
28	90467–22097	CLIP	4					
29	90467–140A4	CLIP	1					
30	90467–180A1	CLIP	1					
31	90467–13M13	CLIP	1					
32	90467–110A3	CLIP	1					
33	6TA–15378–00	HOLDER	1					
34	95822–08016	BOLT, FLANGE	1					
35	2HC–11167–00	PIPE, BREATHER 2	1					
36	67F–24377–00	PIPE, JOINT 2	1					
37	90450–56009	HOSE CLAMP ASSY	3					
38	90387–07051	COLLAR	2					
39	95812–06020	BOLT, FLANGE	2					
40	6TA–15370–00	BREATHER ASSY	1					

POWER PARTS By ATVQUAD

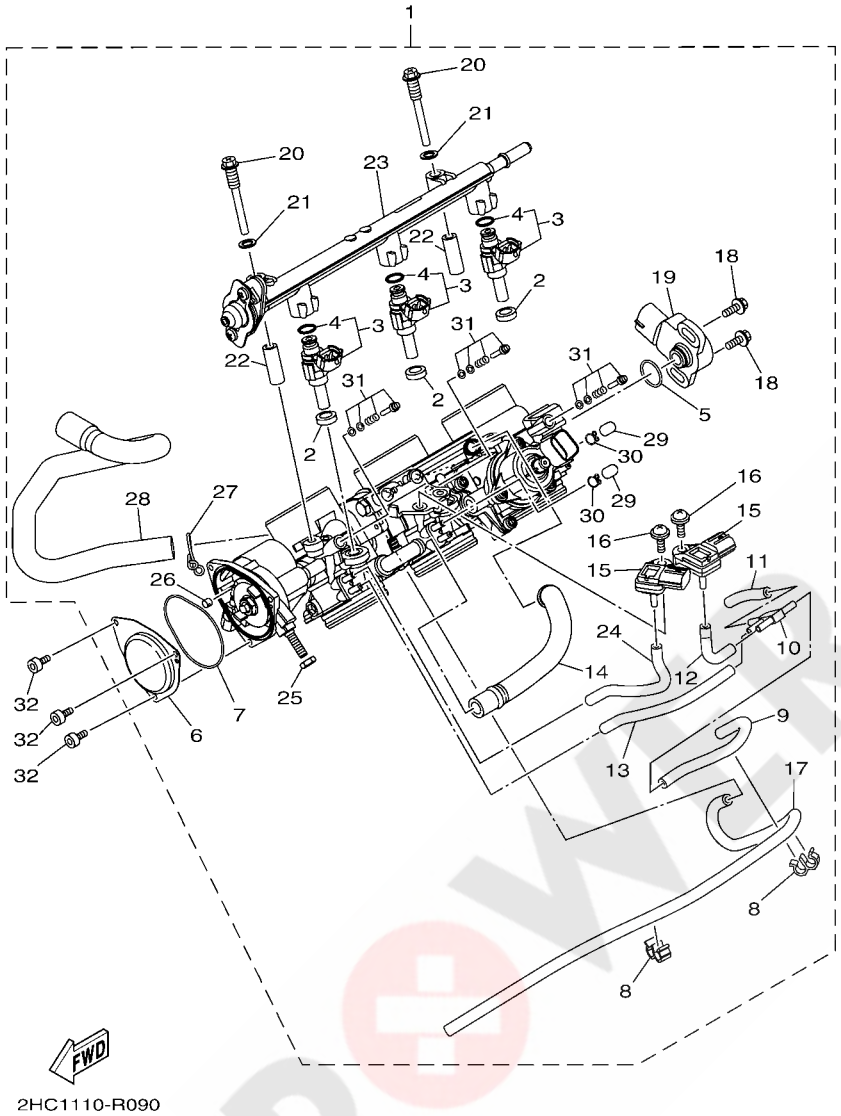

FIG. 9 THROTTLE BODY ASSY 1

REF. NO.	PART NO.	DESCRIPTION	USA					REMARKS
1	2HC–13750–00	THROTTLE BODY ASSY	1					
2	8FP–13556–10	.GASKET, MANIFOLD	3					
3	2HC–13761–00	.INJECTOR	3					
4	68V–1416A–00	..O-RING	1					
5	5YP–14562–00	.O-RING	1					
6	5UG–14293–00	.COVER 1	1					
7	5LP–14147–00	.O-RING	1					
8	69J–2417H–00	.CLAMP 1	2					
9	2HC–13894–00	.HOSE, AIR 4	1					
10	5PW–1410F–00	.CONNECTOR	1					
11	8FP–14349–30	.PIPE	1					
12	8HF–13892–00	.HOSE, AIR 2	1					
13	8GL–13893–00	.HOSE, AIR 3	1					
14	8GL–13895–00	.HOSE, AIR	1					
15	1WS–82380–00	.SENSOR, PRESSURE	2					
16	2C0–14216–00	.SCREW	2					
17	18P–13543–00	.HOSE, AIR	1					
18	8CC–14216–10	.SCREW	2					
19	3B4–85885–00	.THROTTLE SENSOR ASSY	1					
20	8GL–13573–00	.BOLT 1	2					
21	8GL–13571–00	.WASHER	2					
22	8GL–14534–00	.COLLAR	2					
23	2HC–13930–00	.PIPE INLET ASSEMBLY	1					
24	5PW–14349–00	.PIPE	1					
25	1S3–14161–00	.NUT, CABLE ADJUSTING	1					
26	1UY–14155–00	.GUIDE, CABLE	1					
27	90467–150A2	.CLIP	1					

POWER PARTS By 4xQUAD

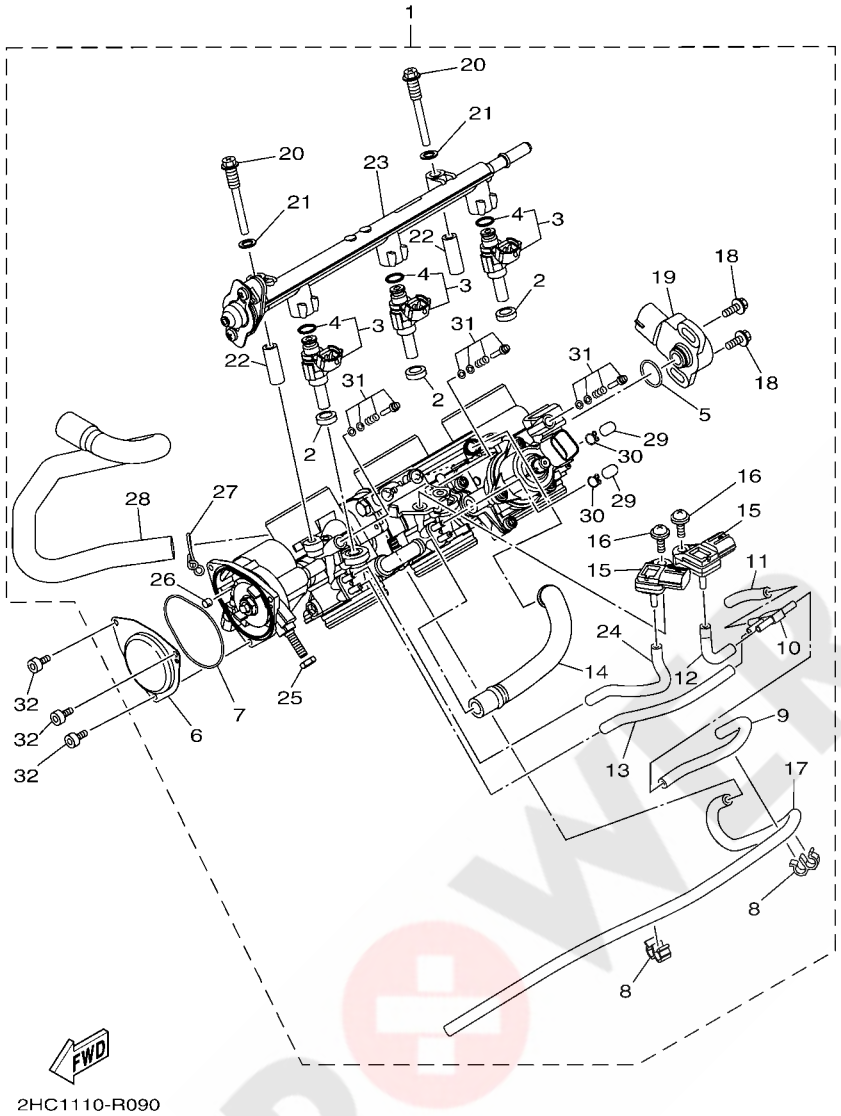

FIG. 9 THROTTLE BODY ASSY 1

REF. NO.	PART NO.	DESCRIPTION	USA					REMARKS
28	2HC–13545–00	.HOSE 1	1					
29	895–14169–00	.CAP	2					
30	8A7–14139–00	.CLIP, PIPE	2					
31	8GL–14503–00	.ADJUST SCREW SET	3					
32	91312–04006	BOLT	3					

POWER PARTS By 4xQUAD

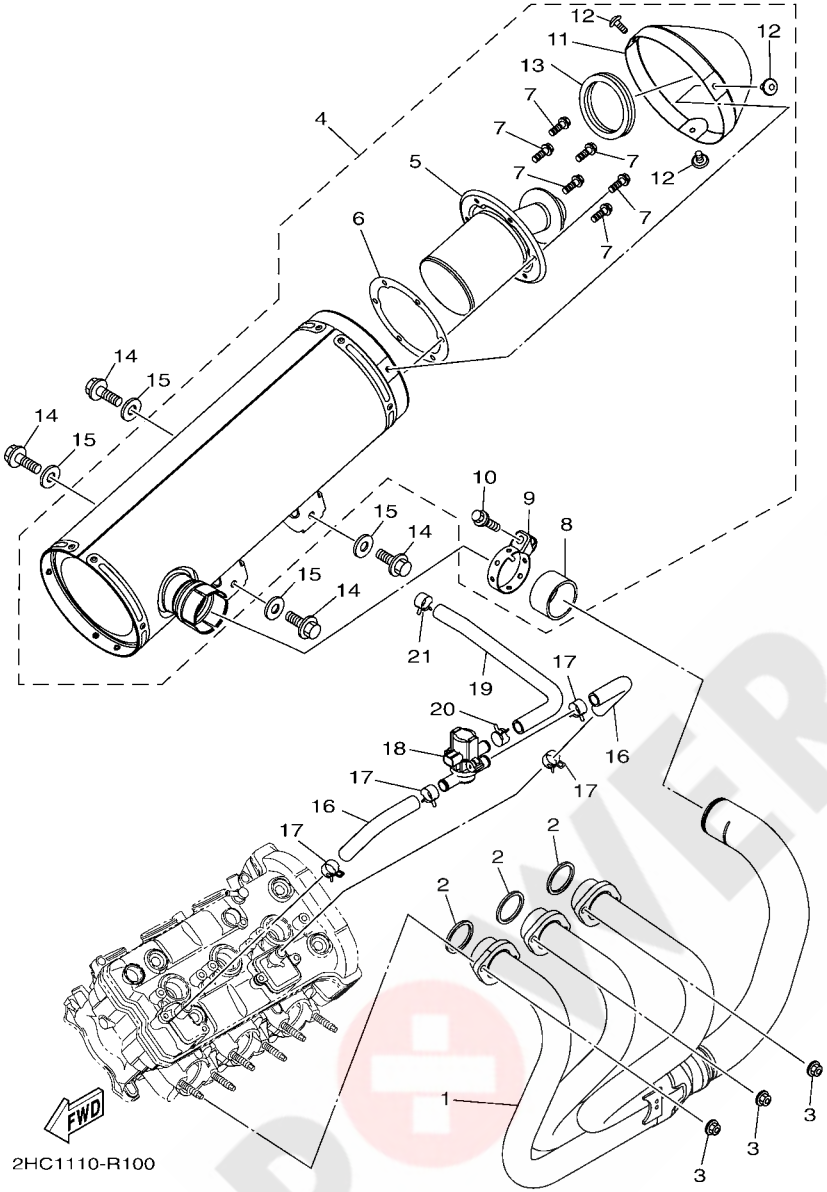

FIG. 10 EXHAUST

REF. NO.	PART NO.	DESCRIPTION	USA					REMARKS
1	2HC–14602–00	EXHAUST PIPE COMP.	1					
2	4FM–14613–00	GASKET, EXHAUST PIPE	3					
3	90179–08410	NUT	6					
4	2HC–14710–00	MUFFLER ASSY 1	1					
5	2HC–14780–09	.SPARK ARRESTER ASSY	1					
6	2HC–14755–00	.GASKET, SILENCER	1					
7	95022–06012	.BOLT, FLANGE	6					
8	1SL–14714–00	.GASKET, MUFFLER	1					
9	1SL–14715–00	.BAND, MUFFLER	1					
10	95022–08035	.BOLT, FLANGE	1					
11	2HC–14799–00	.CAP	1					
12	90149–06298	.SCREW	3					
13	2HC–1475P–00	.SEAT	1					
14	90101–10038	BOLT	4					
15	90201–10034	WASHER, PLATE	4					
16	2HC–E4881–00	HOSE, BEND 1	2					
17	90467–17089	CLIP	4					
18	2HC–14840–00	AIR CUT VALVE ASSY	1					
19	2HC–E4882–00	HOSE, BEND 2	1					
20	90467–17089	CLIP	1					
21	90467–20086	CLIP	1					

POWER PARTS By ATV-QUAD

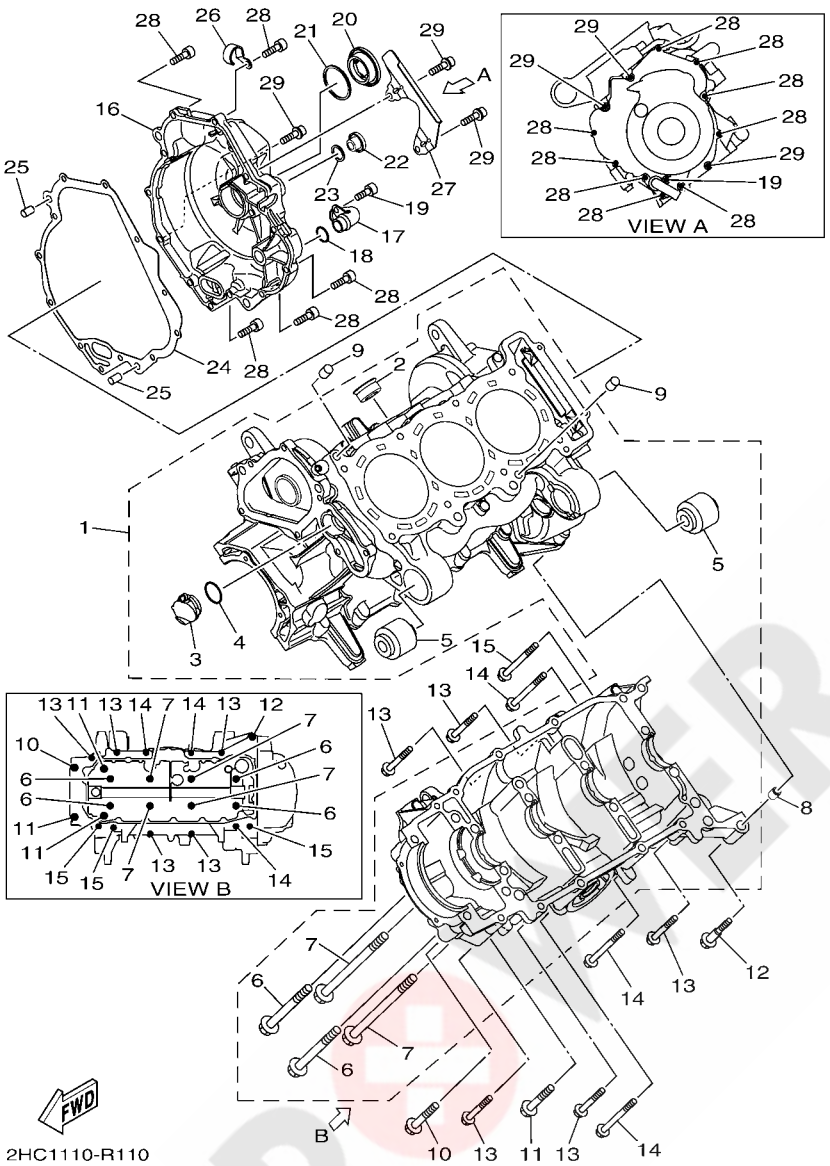

FIG. 11 CRANKCASE

REF. NO.	PART NO.	DESCRIPTION	USA					REMARKS
1	2HC–15109–09	CRANKCASE ASSY	1					
2	90340–27129	.PLUG, STRAIGHT SCREW	1					
3	8ES–15167–00	.PLUG, BLIND 1	1					
4	93210–24709	.O-RING	1					
5	2HC–15541–00	.COLLAR	2					
6	90119–09004	.BOLT, WITH WASHER	4					
7	90119–09011	.BOLT, WITH WASHER	4					
8	99530–10014	PIN, DOWEL	1					
9	99530–10114	PIN, DOWEL	2					
10	95812–08055	BOLT, FLANGE	1					
11	95812–08070	BOLT, FLANGE	3					
12	90109–06185	BOLT	1					
13	95812–06055	BOLT, FLANGE	5					
14	95812–06080	BOLT, FLANGE	3					
15	90105–06123	BOLT, FLANGE	3					
16	2HC–15421–00	COVER, CRANKCASE 2	1					
17	2HC–13115–00	CONNECTOR, SUCTION PIPE	1					
18	93210–14003	O-RING	1					
19	91312–06014	BOLT	1					
20	90340–36004	PLUG, STRAIGHT SCREW	1					
21	93210–357A3	O-RING	1					
22	90340–14016	PLUG, STRAIGHT SCREW	1					
23	93210–14369	O-RING	1					
24	2HC–15461–00	GASKET, CRANKCASE COVER 2	1					
25	99530–08012	PIN, DOWEL	2					
26	90462–08225	CLAMP	1					
27	2HC–15191–00	PLATE	1					

POWER PARTS By 4xQUAD

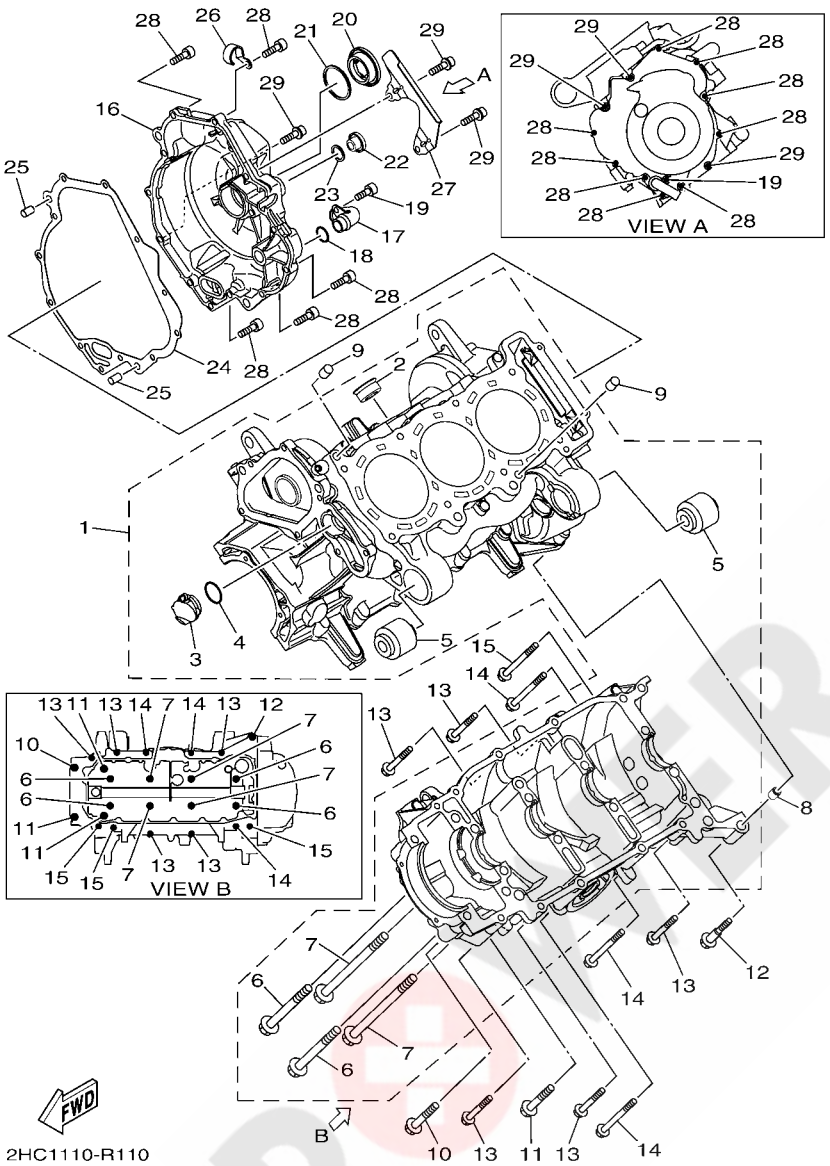

FIG. 11 CRANKCASE

REF. NO.	PART NO.	DESCRIPTION	USA					REMARKS
28	91312–06025	BOLT, HEXAGON SOCKET HEAD	9					
29	90110–06329	BOLT, HEXAGON SOCKET HEAD	3					

POWER PARTS By 4xQUAD

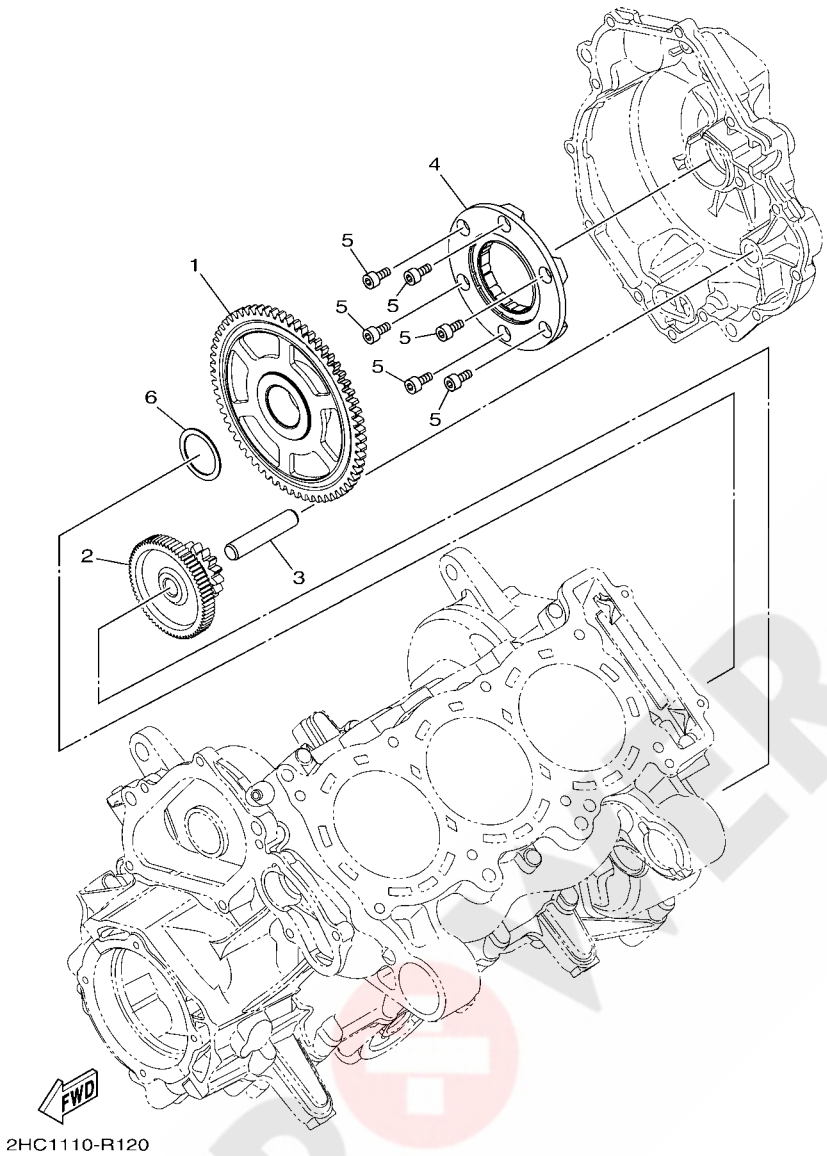

FIG. 12 STARTER CLUTCH

REF. NO.	PART NO.	DESCRIPTION	USA					REMARKS
1	8FA–15515–00	GEAR 3	1					
2	2HC–15512–00	GEAR, IDLER 1	1					
3	8ES–15521–00	SHAFT 1	1					
4	2HC–15590–00	STARTER ONE-WAY ASSY	1					
5	90110–06168	BOLT, HEXAGON SOCKET HEAD	6					
6	90201–30013	WASHER, PLATE	1					

POWER PARTS By 4xQUAD

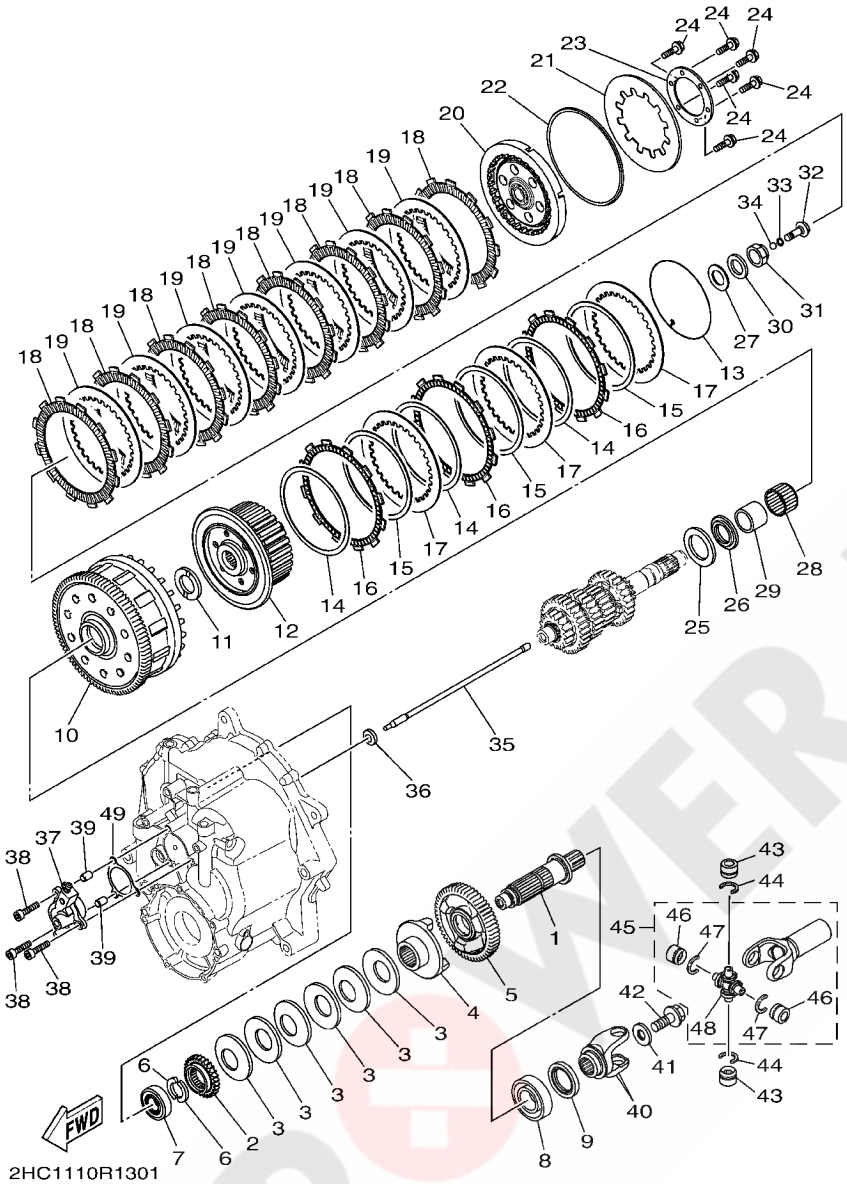

FIG. 13 CLUTCH

REF. NO.	PART NO.	DESCRIPTION	USA					REMARKS
1	2HC–11465–00	SHAFT 2	1					
2	2HC–13324–00	GEAR, PUMP DRIVE	1					
3	2HC–16318–00	SPRING, DAMPER	6					
4	2HC–16317–00	CAM, DAMPER 1	1					
5	2HC–16111–00	GEAR, PRIMARY DRIVE	1					
6	23P–17529–00	WASHER, THRUST	2					
7	93306–20483	BEARING	1					
8	93306–30525	BEARING	1					
9	93102–35039	OIL SEAL	1					
10	2HC–16150–00	PRIMARY DRIVEN GEAR COMP.	1					
11	1D7–16154–00	PLATE, THRUST 1	1					
12	2HC–16371–00	BOSS, CLUTCH	1					
13	2H7–16385–00	RING SET	1					
14	36Y–16384–00	PLATE, SEAT	3					
15	36Y–16383–00	SPRING.,CUSHION	3					
16	1PK–16331–00	PLATE, FRICTION 2	3					
17	2H7–16325–00	PLATE, CLUTCH 2	3					
18	5YU–16321–00	PLATE, FRICTION	8					
19	2H7–16325–00	PLATE, CLUTCH 2	7					
20	2HC–16350–00	PRESSURE PLATE ASSY	1					
21	36Y–16334–00	SPRING, CLUTCH 2	1					
22	36Y–16335–00	HOUSING, SPRING	1					
23	1TX–16352–00	PLATE, PRESSURE 2	1					
24	95812–06025	BOLT, FLANGE	6					
25	2HC–16587–00	SPRING.,ABSORBER	1					
26	2HC–16183–00	SPACER 3	1					
27	90201–22013	WASHER, PLATE	1					

POWER PARTS
By 4xQUAD

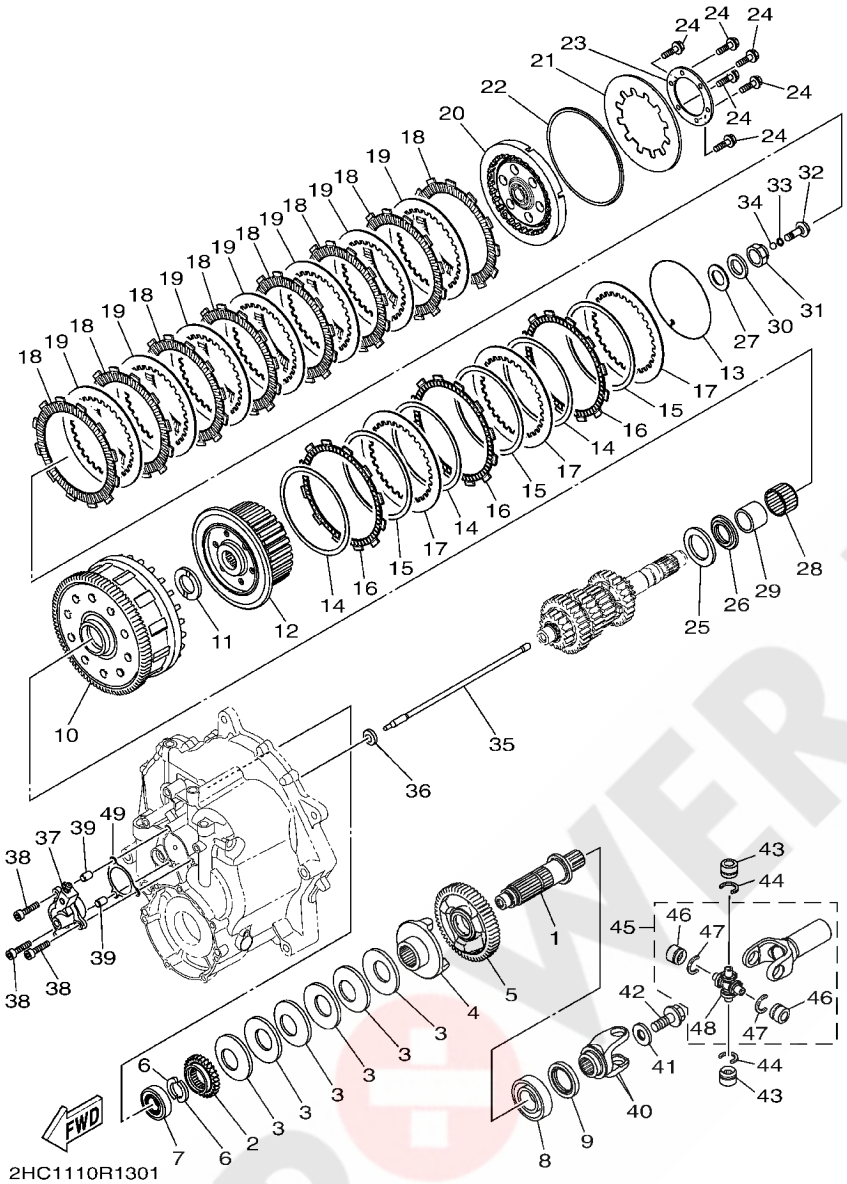

FIG. 13 CLUTCH

REF. NO.	PART NO.	DESCRIPTION	USA					REMARKS
28	93310–33560	BEARING	1					
29	2HC–16181–00	SPACER 1	1					
30	90208–22003	WASHER, CONICAL SPRING	1					
31	90179–22010	NUT	1					
32	4KG–16356–00	ROD, PUSH 1	1					
33	93210–06632	O-RING	1					
34	93511–32017	BALL	1					
35	2HC–16357–00	ROD, PUSH 2	1					
36	93109–08061	OIL SEAL	1					
37	2HC–16381–00	PUSH LEVER COMP.	1					
38	90110–06246	BOLT, HEXAGON SOCKET HEAD	3					
39	99530–08012	PIN, DOWEL	2					
40	2HC–46147–00	YOKE, JOINT 2	1					
41	90201–121H0	WASHER, PLATE	1					
42	90105–12094	BOLT, FLANGE	1					
43	93399–99948	BEARING	2					
44	93440–20088	CIRCLIP	2					
45	2HC–46108–00	CROSS JOINT COMP. 3	1					
46	93399–99948	.BEARING	2					
47	93440–20088	.CIRCLIP	2					
48	2HC–46187–00	.SPIDER	1					
49	2HC–17472–00	GASKET	1					

POWER PARTS By 4x4QUAD

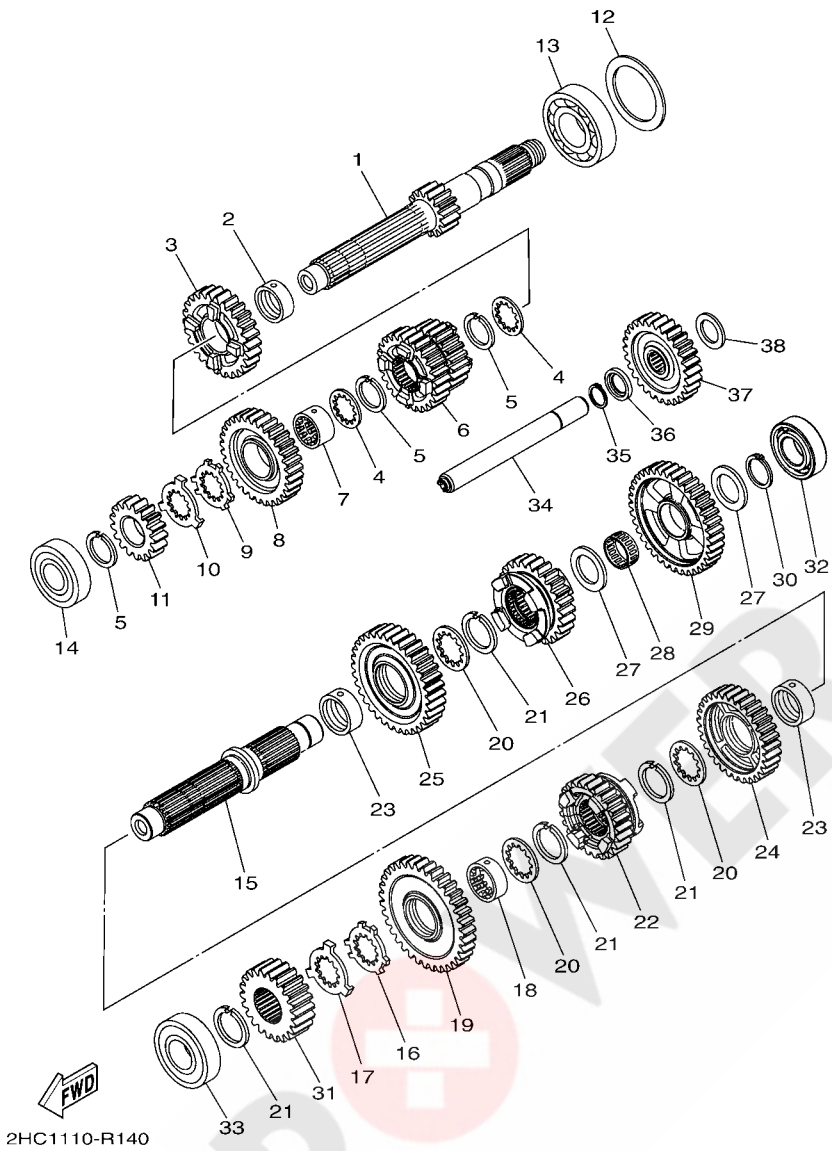

FIG. 14 TRANSMISSION

REF. NO.	PART NO.	DESCRIPTION	USA					REMARKS
1	2HC–17411–00	AXLE, MAIN (15T)	1					
2	90387–28003	COLLAR	1					
3	2HC–17141–00	GEAR, 4TH PINION (26T)	1					
4	90209–25011	WASHER	2					
5	93440–28184	CIRCLIP	3					
6	2HC–17121–00	GEAR, 2ND PINION (26T/22T)	1					
7	90387–25023	COLLAR	1					
8	2HC–17151–00	GEAR, 5TH PINION (31T)	1					
9	90214–25004	WASHER, CLAW	1					
10	90214–25003	WASHER, CLAW	1					
11	2HC–17111–00	GEAR,1ST PINION (17T)	1					
12	90201–51013	WASHER, PLATE	1					
13	93306–37817	BEARING	1					
14	93306–37215	BEARING	1					
15	2HC–17421–00	AXLE, DRIVE	1					
16	90214–29002	WASHER, CLAW	1					
17	90214–28002	WASHER, CLAW	1					
18	90387–28004	COLLAR	1					
19	2HC–17211–00	GEAR, 1ST WHEEL (35T)	1					
20	90209–28008	WASHER	3					
21	93440–31187	CIRCLIP	4					
22	B57–17251–00	GEAR, 5TH WHEEL (25T)	1					Go to P/N : PE0-MC-160027
23	90387–31003	COLLAR	2					
24	B57–17231–00	GEAR, 3RD WHEEL (31T)	1					Go to P/N : PE0-MC-160027
25	B57–17221–00	GEAR, 2ND WHEEL (34T)	1					Go to P/N : PE0-MC-160027
26	B57–17241–00	GEAR, 4TH WHEEL (25T)	1					Go to P/N : PE0-MC-160027
27	90201–25290	WASHER, PLATE	2					

POWER PARTS By ATV-QUAD

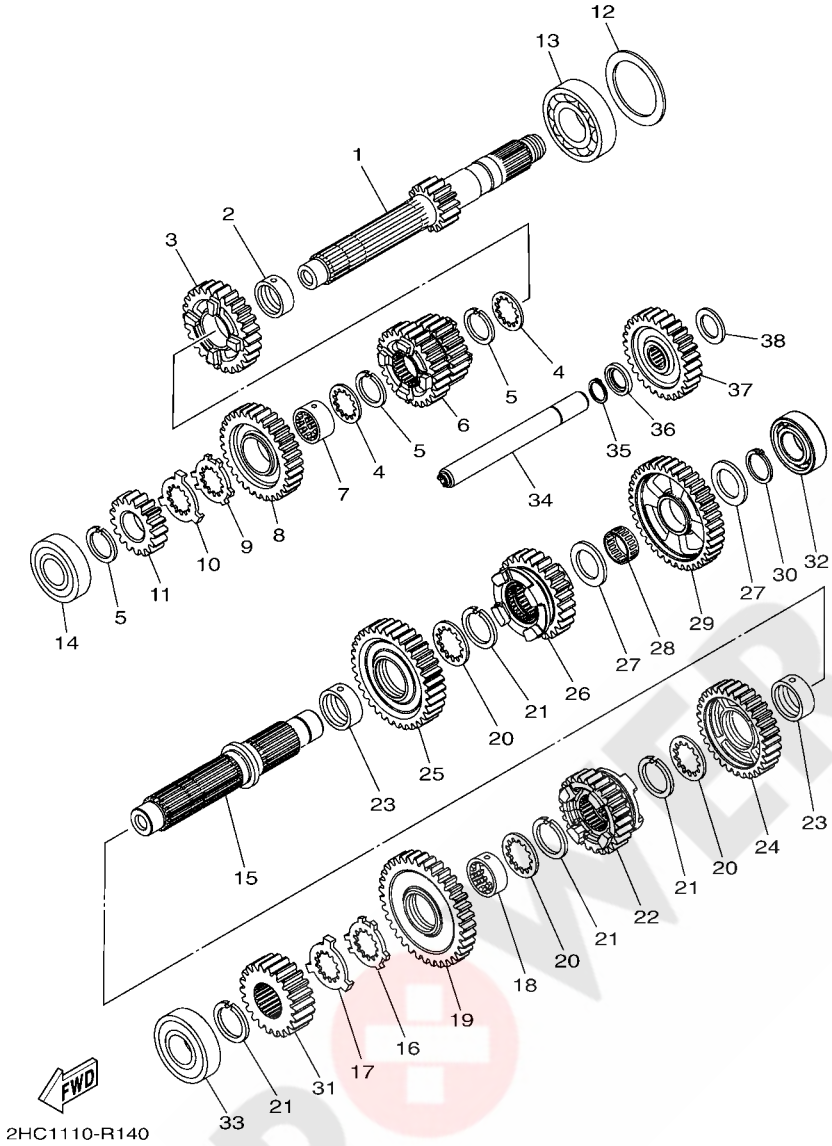

FIG. 14 TRANSMISSION

REF. NO.	PART NO.	DESCRIPTION	USA					REMARKS
28	93310–32590	BEARING	1					
29	2HC–17253–00	GEAR, REVERSE WHEEL 2 (37T)	1					
30	93410–25017	CIRCLIP	1					
31	2HC–17582–00	GEAR, MIDDLE DRIVE (22T)	1					
32	93306–20595	BEARING	1					
33	93306–30585	BEARING	1					
34	2HC–17432–00	AXLE, IDLE	1					
35	93410–17037	CIRCLIP	1					
36	2HC–18473–00	RETAINER, SPRING	1					
37	2HC–1724A–00	REVERSE WHEEL ASSY (28T)	1					
38	90201–17257	WASHER, PLATE	1					

POWER PARTS By axQUAD

PARTS NEWS

YAMAHA MOTOR CO., LTD.
2500 SHINGAI IWATA SHIZUOKA JAPAN

Date: 04/08/2016

News No. PE0-MC-160027

Signature: M Tatum

Cause ☑ Revision Notice ☐ Correction ☐ Sales Unit Change ☐ Others

Model	See the"List of Models and CATALOGUE No's below."
Subject	PART CATALOG CORRECTION
CATALOGUE NO.	See the "List of Models and Catalog No's" below.

Time of YPEC Revision Text, Illustration --> PDF Replace -->

(YPEC = Yamaha Parts Electrical Catalogue = Website parts catalogue)

1. LIST of Models and Catalog No's.

The applicable MODELS, MODEL CODES, and CATALOG No's are as follows.

Model Name	Model Code	Mdl Year	Catalog No	Figure No
YXZ10YPSG	2HC1	2016	1R2HC-110E1	14
YX10ZPSG	2HC2	2016	1R2HC-171E1	14
YXZ10YPSG	2HC3	2016	1R2HC-700E1	14
YXZ10YPXG	2HC4	2016	1R2HC-110EA	14
YX10ZPNG	2HC5	2016	1R2HC-171EA	14
YXZ10YPXG	2HC6	2016	1R2HC-300E1	14
YXZ10YPXG	2HC7	2016	1R2HC-700EA	14
YXZ10YPSG	2HC8	2016	1R2HC-110EK	14
YX10ZPSG	2HC9	2016	1R2HC-171EK	14

FIG. 14 TRANSMISSION

2. LIST CORRECTION:

Fig.No-Ref.No.	Old Part No.	New Part No.	Part Name	Qty.	Note
14-22	2HC-17251-00		GEAR, 5TH WHEEL	1	
14-22		B57-17251-00	GEAR, 5TH WHEEL	1	REPLACE AS SET
14-24	2HC-17231-00		GEAR, 3RD WHEEL	1	
14-24		B57-17231-00	GEAR, 3RD WHEEL	1	REPLACE AS SET
14-25	2HC-17221-00		GEAR, 2ND WHEEL	1	
14-25		B57-17221-00	GEAR, 2ND WHEEL	1	REPLACE AS SET
14-26	2HC-17241-00		GEAR, 4TH WHEEL	1	
14-26		B57-17241-00	GEAR, 4TH WHEEL	1	REPLACE AS SET

Thank you very much for your cooperation.

Parts Manager Check	Service Manager Check	Parts Manager File	YAMAHA MOTOR CO.,LTD 2500 Shingai Iwata Shizuoka 438-8501.Japan Parts & Acc. Engineering Div., YMC

YAMAHA GENUINE Parts & Accessories

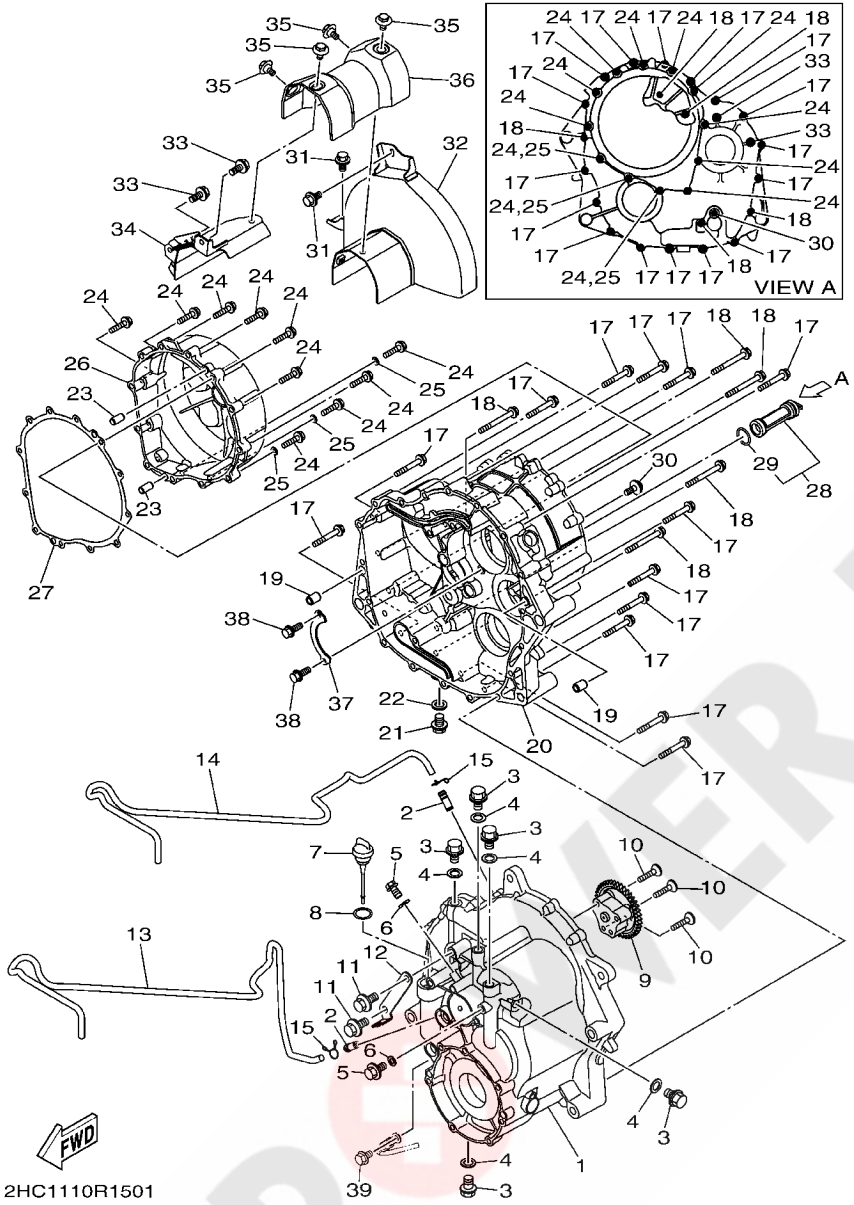

FIG. 15 TRANSFER

REF. NO.	PART NO.	DESCRIPTION	USA					REMARKS
1	2HC–17541–00	CASE, TRANSFER 1	1					
2	137–13115–01	CONNECTOR, SUCTION PIPE	2					
3	90340–10003	PLUG, STRAIGHT SCREW	5					
4	90430–10148	GASKET	5					
5	95022–06010	BOLT, FLANGE	2					
6	90430–06014	GASKET	2					
7	18G–15362–00	PLUG, OIL LEVEL	1					
8	93210–21190	O-RING	1					
9	2HC–17880–00	OIL PUMP ASSY	1					
10	98702–06030	SCREW, FLAT HEAD	3					
11	95822–08016	BOLT, FLANGE	2					
12	2HC–17665–00	PLATE 1	1					
13	90445–08040	HOSE (L1140)	1					
14	90445–08041	HOSE (L1040)	1					
15	90467–08075	CLIP	2					
17	95022–06045	BOLT, FLANGE	16					
18	95022–06060	BOLT, FLANGE	5					
19	99530–10114	PIN, DOWEL	2					
20	2HC–17542–00	CASE, TRANSFER 2	1					
21	90340–12006	PLUG, STRAIGHT SCREW	1					
22	90430–12213	GASKET	1					
23	99530–08016	PIN, DOWEL	2					
24	95022–06030	BOLT, FLANGE	12					
25	90430–06014	GASKET	3					
26	2HC–15415–00	COVER, 1	1					
27	2HC–15453–00	GASKET	1					

POWER PARTS By ATVQUAD

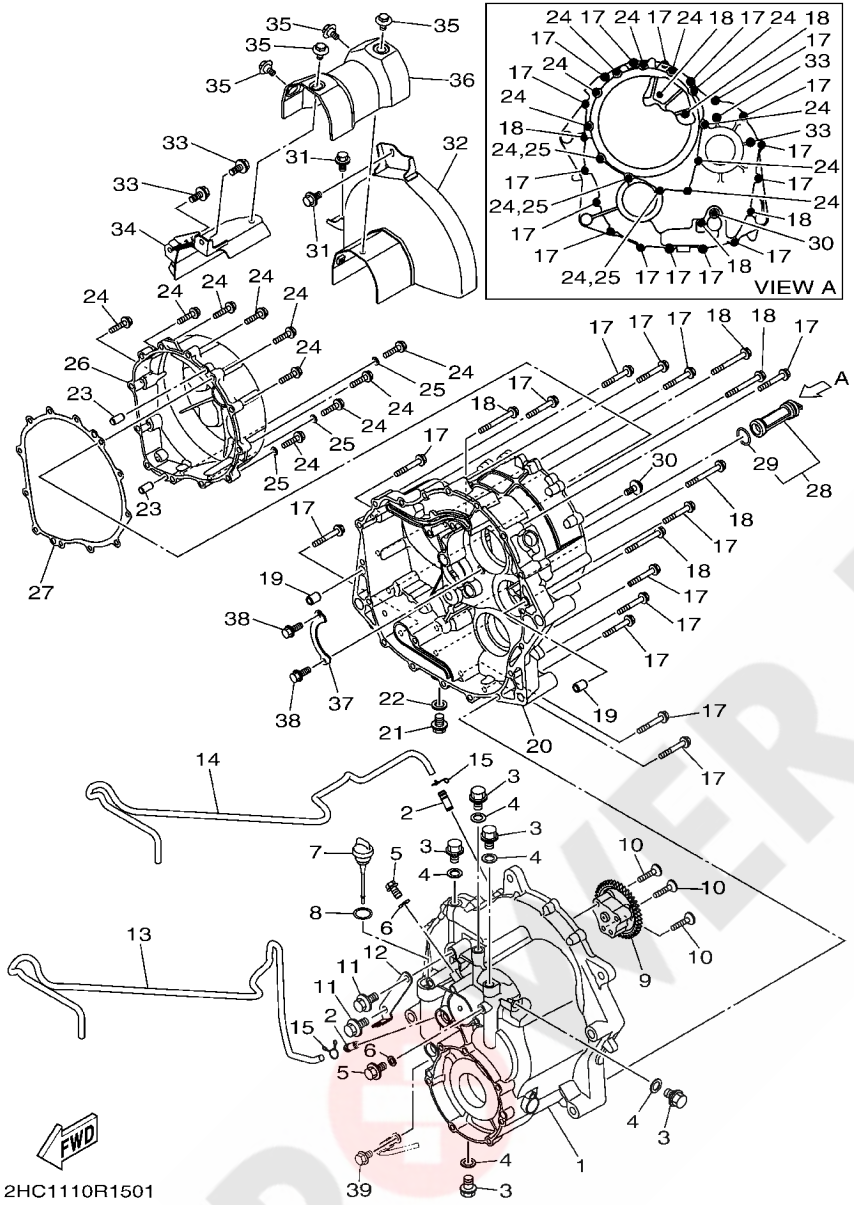

FIG. 15 TRANSFER

REF. NO.	PART NO.	DESCRIPTION	USA					REMARKS
28	2HC–13411–00	STRAINER, OIL	1					
29	93210–207A0	.O-RING	1					
30	90159–06021	SCREW, WITH WASHER	1					
31	90119–06242	BOLT, WITH WASHER	2					
32	2HC–2147J–00	COVER, SHAFT 1	1					
33	90119–06242	BOLT, WITH WASHER	2					
34	2HC–2147K–00	COVER, SHAFT 2	1					
35	90109–06202	BOLT	4					
36	2HC–2131P–00	COVER PLATE COMP.	1					
37	2HC–17558–00	PLATE, BEARING	1					
38	90105–06187	BOLT, FLANGE	2					
39	95880–06012	BOLT, FLANGE	1					

POWER PARTS By ATV QUAD

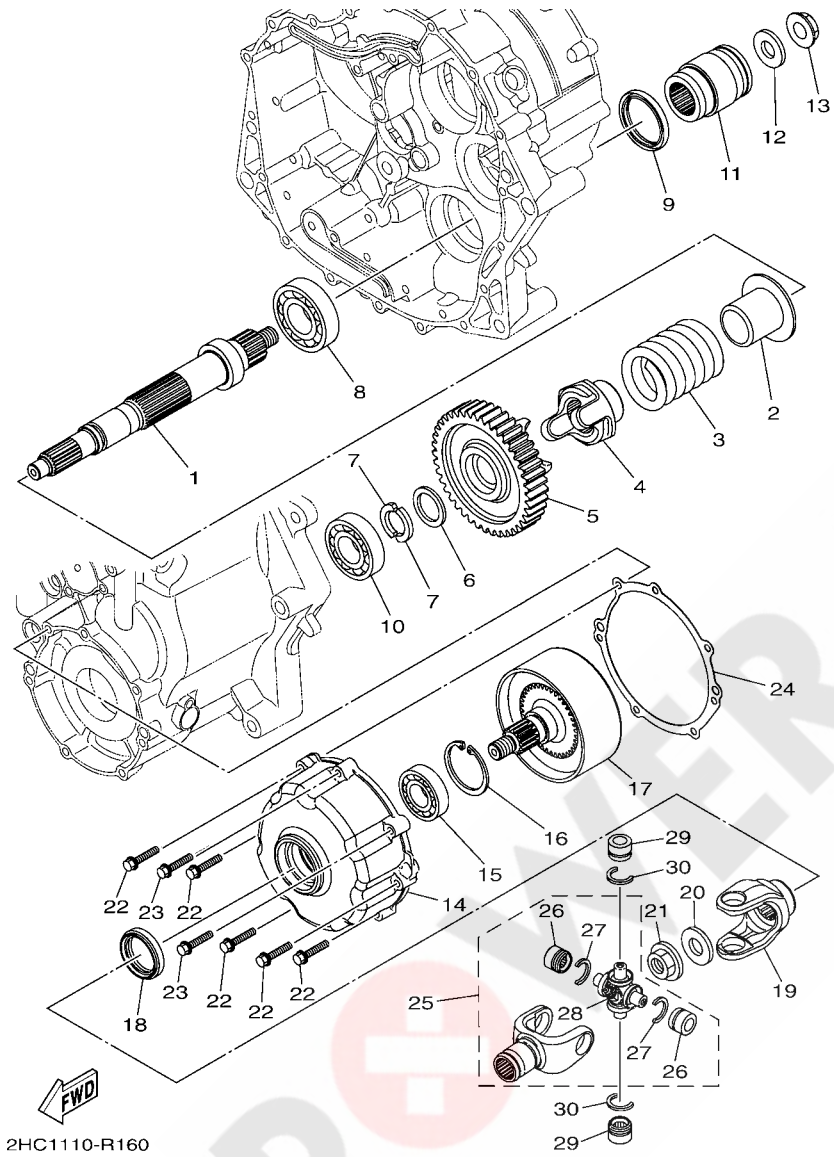

FIG. 16 MIDDLE DRIVE GEAR

REF. NO.	PART NO.	DESCRIPTION	USA					REMARKS
1	2HC–17523–00	SHAFT	1					
2	2HC–17524–00	HOLDER	1					
3	2HC–17528–00	SPRING, DAMPER	1					
4	2S3–17527–00	CAM, DRIVEN	1					
5	2HC–17583–00	GEAR, MIDDLE DRIVEN	1					
6	90201–27014	WASHER, PLATE	1					
7	23P–17529–00	WASHER, THRUST	2					
8	93306–20607	BEARING	1					
9	93105–45010	OIL SEAL	1					
10	93306–37218	BEARING	1					
11	2HC–17832–00	COUPLING	1					
12	90201–165H4	WASHER, PLATE	1					
13	90179–16004	NUT	1					
14	2HC–17521–00	HOUSING, BEARING	1					
15	93306–00518	BEARING	1					
16	99009–47500	CIRCLIP	1					
17	2HC–46380–00	SHAFT ASSY 1	1					
18	93102–34095	OIL SEAL	1					
19	2HC–17576–00	YOKE,JOINT 2	1					
20	90201–165H4	WASHER, PLATE	1					
21	90179–16004	NUT	1					
22	95022–06030	BOLT, FLANGE	5					
23	90105–06096	BOLT, FLANGE	2					
24	2HC–17818–00	GASKET	1					
25	2HC–46107–00	CROSS JOINT COMP. 2	1					
26	93399–99948	.BEARING	2					
27	93440–20088	.CIRCLIP	2					

POWER PARTS By 4WQUAD

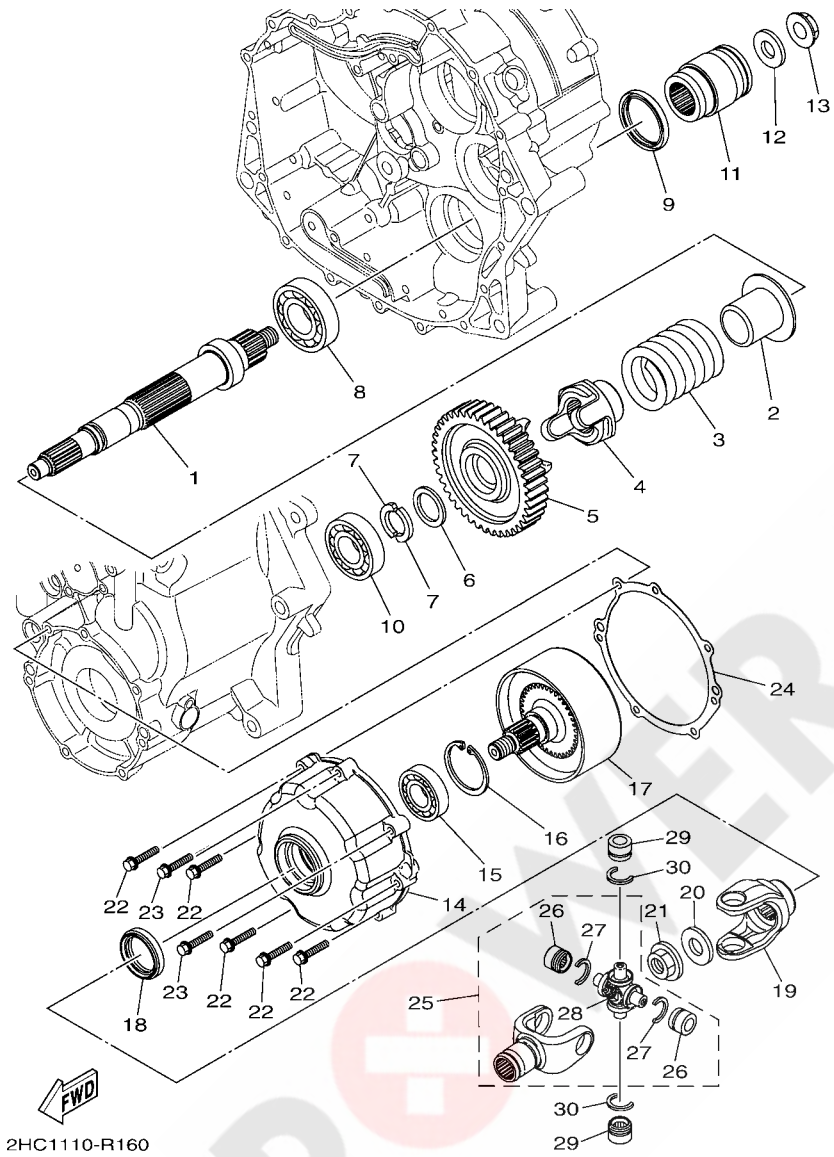

FIG. 16 MIDDLE DRIVE GEAR

REF. NO.	PART NO.	DESCRIPTION	USA					REMARKS
28	5GT–46187–00	.SPIDER	1					
29	93399–99948	BEARING	2					
30	93440–20088	CIRCLIP	2					

POWER PARTS By 4xQUAD

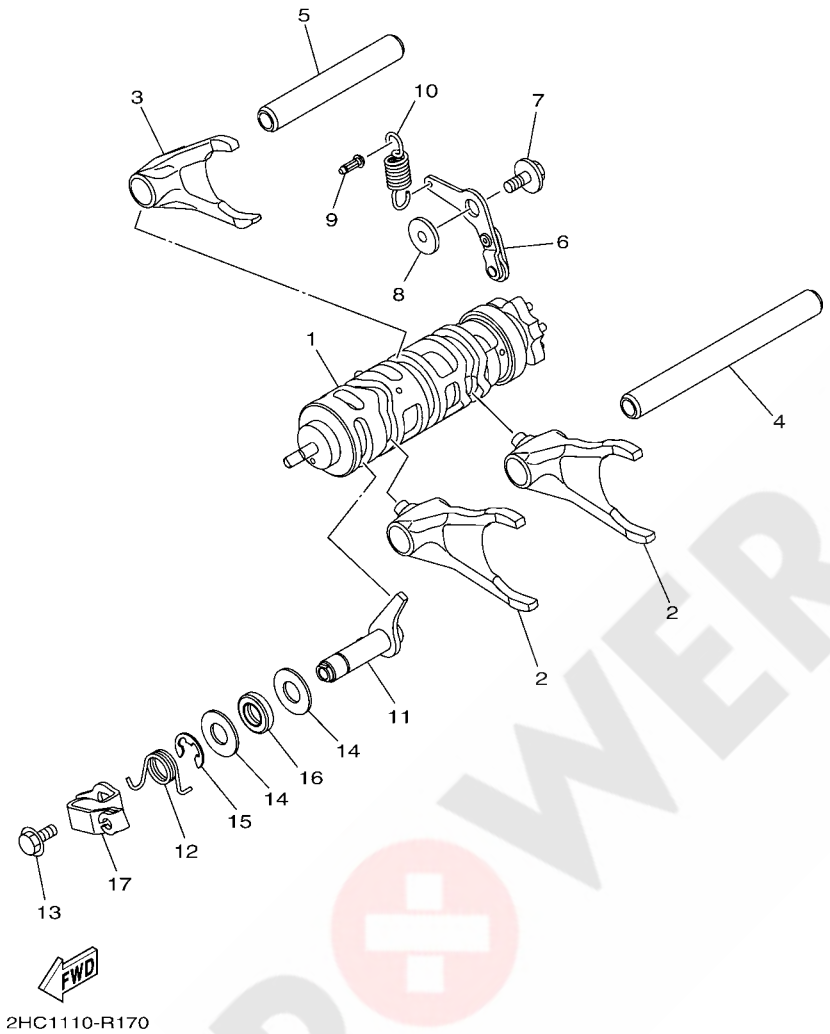

FIG. 17 SHIFT CAM & FORK

REF. NO.	PART NO.	DESCRIPTION	USA					REMARKS
1	2HC–18540–00	SHIFT CAM ASSY	1					
2	2HC–18511–00	FORK, SHIFT 1	2					
3	2HC–18512–00	FORK, SHIFT 2	1					
4	3D8–18531–00	BAR, SHIFT FORK GUIDE 1	1					
5	3D8–18535–00	BAR, SHIFT FORK GUIDE 2	1					
6	2HC–18140–00	STOPPER LEVER ASSY	1					
7	90159–06027	SCREW, WITH WASHER	1					
8	4NX–18175–00	SPACER	1					
9	132–16346–00	HOOK, SPRING	1					
10	2HC–18144–00	HANGER, SPRING	1					
11	2HC–18380–00	SHIFTER BRKT. ASSY	1					
12	2HC–18337–00	SPRING	1					
13	95812–06012	BOLT, FLANGE	1					
14	90201–12575	WASHER, PLATE	2					
15	99002–10600	CIRCLIP	1					
16	93102–12106	OIL SEAL (SD 12-22-5 HS)	1					
17	2HC–18431–00	BRACKET, SHIFTER	1					

POWER PARTS By ARQUAD

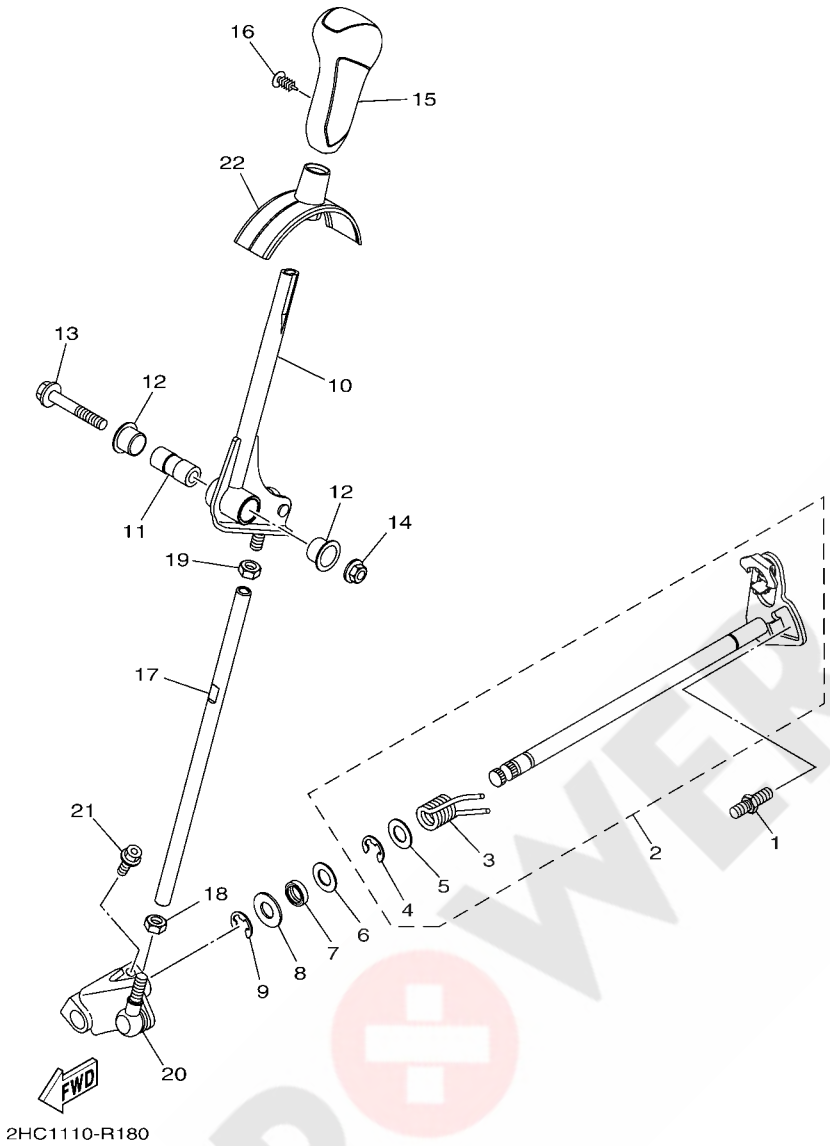

FIG. 18 SHIFT SHAFT

REF. NO.	PART NO.	DESCRIPTION	USA					REMARKS
1	1D7–18127–00	STOPPER, SCREW	1					
2	2HC–18101–00	SHIFT SHAFT ASSY	1					
3	90508–32021	.SPRING, TORSION	1					
4	99002–10600	.CIRCLIP	1					
5	90201–127E1	.WASHER, PLATE	1					
6	90201–127E1	WASHER, PLATE	1					
7	93102–12224	OIL SEAL	1					
8	90201–12575	WASHER, PLATE	1					
9	99002–10600	CIRCLIP	1					
10	2HC–18190–01	LEVER COMP. 1	1					
11	90387–08107	COLLAR	1					
12	90381–15001	BUSH, SOLID	2					
13	95812–08050	BOLT, FLANGE	1					
14	95602–08200	NUT, U FLANGE	1					
15	2HC–E8174–00	KNOB, SHIFT LEVER	1					
16	90269–05055	RIVET	1					
17	2HC–18115–00	ROD, SHIFT	1					
18	90170–08358	NUT	1					
19	95302–08700	NUT, HEXAGON	1					
20	2HC–18169–00	ARM, SHIFT 2	1					
21	90105–06142	BOLT, FLANGE	1					
22	2HC–E8172–00	GUIDE, SHIFT	1					

POWER PARTS By 4xQUAD

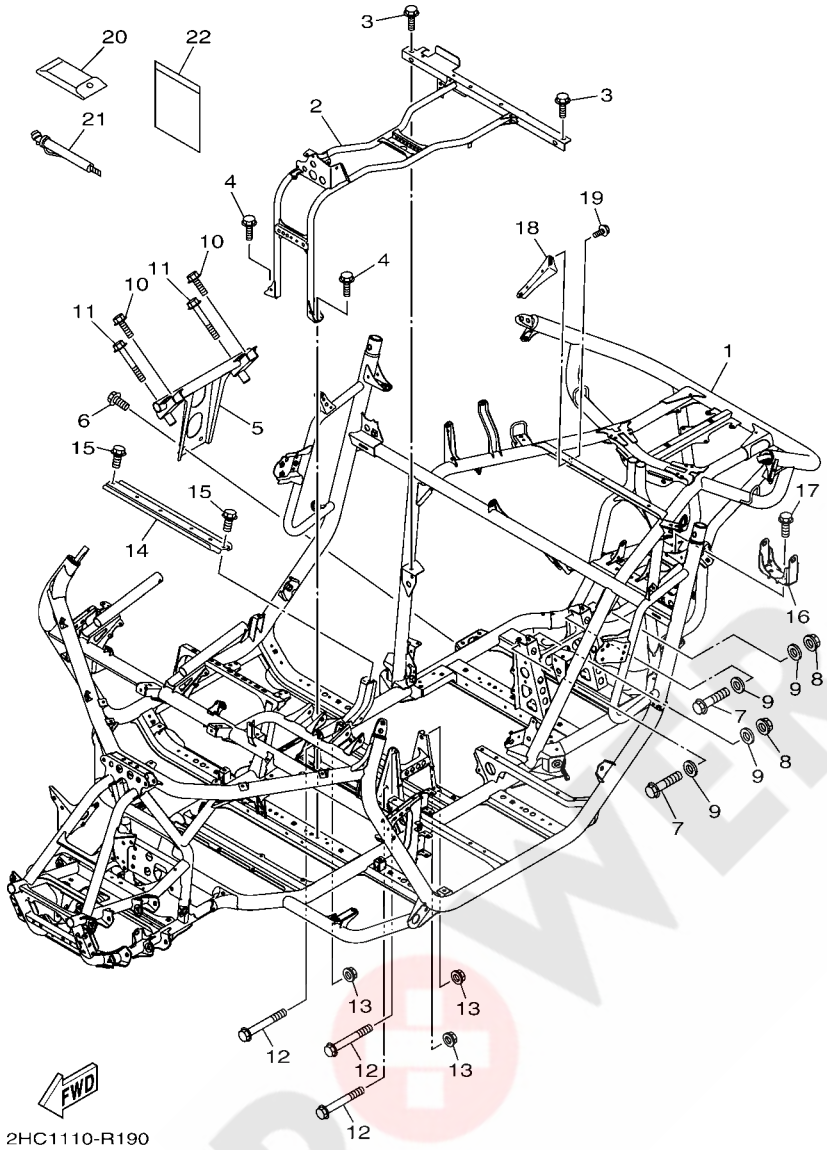

FIG. 19 FRAME

REF. NO.	PART NO.	DESCRIPTION	USA					REMARKS
1	2HC–F1110–00	FRAME COMP.	1					
2	2HC–F111B–00	FRAME SUB COMP.	1					
3	95812–08016	BOLT, FLANGE	2					
4	90105–08867	BOLT, FLANGE	2					
5	2HC–F110A–00	ENG. MOUNT COMP.	1					
6	95812–10016	BOLT, FLANGE	2					
7	95812–12070	BOLT, FLANGE	2					
8	90185–12002	NUT, SELF-LOCKING	2					
9	92902–12200	WASHER	4					
10	95812–08020	BOLT, FLANGE	2					
11	95812–08055	BOLT, FLANGE	2					
12	90105–10176	BOLT, FLANGE	3					
13	95602–10200	NUT, U FLANGE	3					
14	2HC–F1349–00	BRACKET, SEAT	1					
15	95812–08025	BOLT, FLANGE	2					
16	2HC–F194J–00	STAY, MUFFLER	1					
17	95812–10016	BOLT, FLANGE	2					
18	2HC–F115C–01	BRKT	1					
19	95812–06016	BOLT, FLANGE	2					
20	5B4–F8100–00	TOOL KIT	1					
21	1XD–F811A–00	GAUGE, AIR	1					
22	1P0–F8186–01	POUCH	1					

POWER PARTS By 4WD

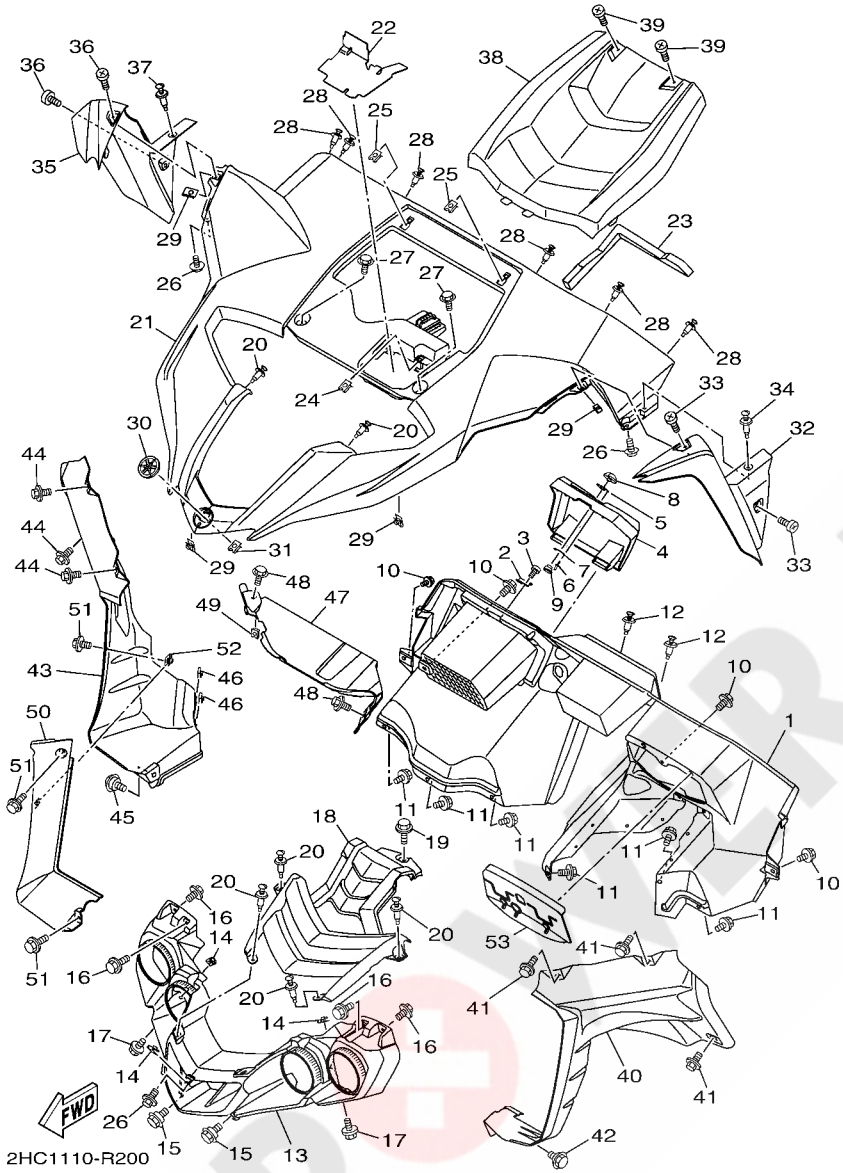

FIG. 20 FRONT FENDER

REF. NO.	PART NO.	DESCRIPTION	USA					REMARKS
1	2HC–K7711–00	PANEL, INSTRUMENT	1					
2	1XD–F139T–00	BRACKET, COVER	1					
3	90164–04800	SCREW, TAPPING	2					
4	2HC–F160F–00	LID	1					
5	1XD–F1515–00	WASHER, SPECIAL	1					
6	90267–24143	RIVET, BLIND	2					
7	1XD–F1516–00	WASHER, SPECIAL 2	1					
8	1XD–2837G–00	LOCK 1	1					
9	1XD–2837H–00	LOCK 2	1					
10	90111–06814	BOLT,HEX. SOCKET BUTTON	4					
11	90119–06226	BOLT, WITH WASHER	6					
12	90269–07803	RIVET	2					
13	2HC–F8309–00	GRILLE, FRONT	1					
14	90183–060A6	NUT, SPRING	3					
15	90109–06202	BOLT	2					
16	90119–06226	BOLT, WITH WASHER	4					
17	90119–06226	BOLT, WITH WASHER	2					
18	2HC–F3121–10	COVER, UPPER 1	1					
19	90119–06226	BOLT, WITH WASHER	1					
20	90269–07803	RIVET	6					
21	2HC–F1510–00	FRONT FENDER COMP.	1					
22	2HC–8258K–00	INSULATOR 1	1					
23	2HC–8259K–00	INSULATOR 2	1					
24	90183–060A6	NUT, SPRING	1					
25	90183–060A6	NUT, SPRING	2					
26	90119–06226	BOLT, WITH WASHER	3					
27	90119–06226	BOLT, WITH WASHER	2					

POWER PARTS By 4WDUAD

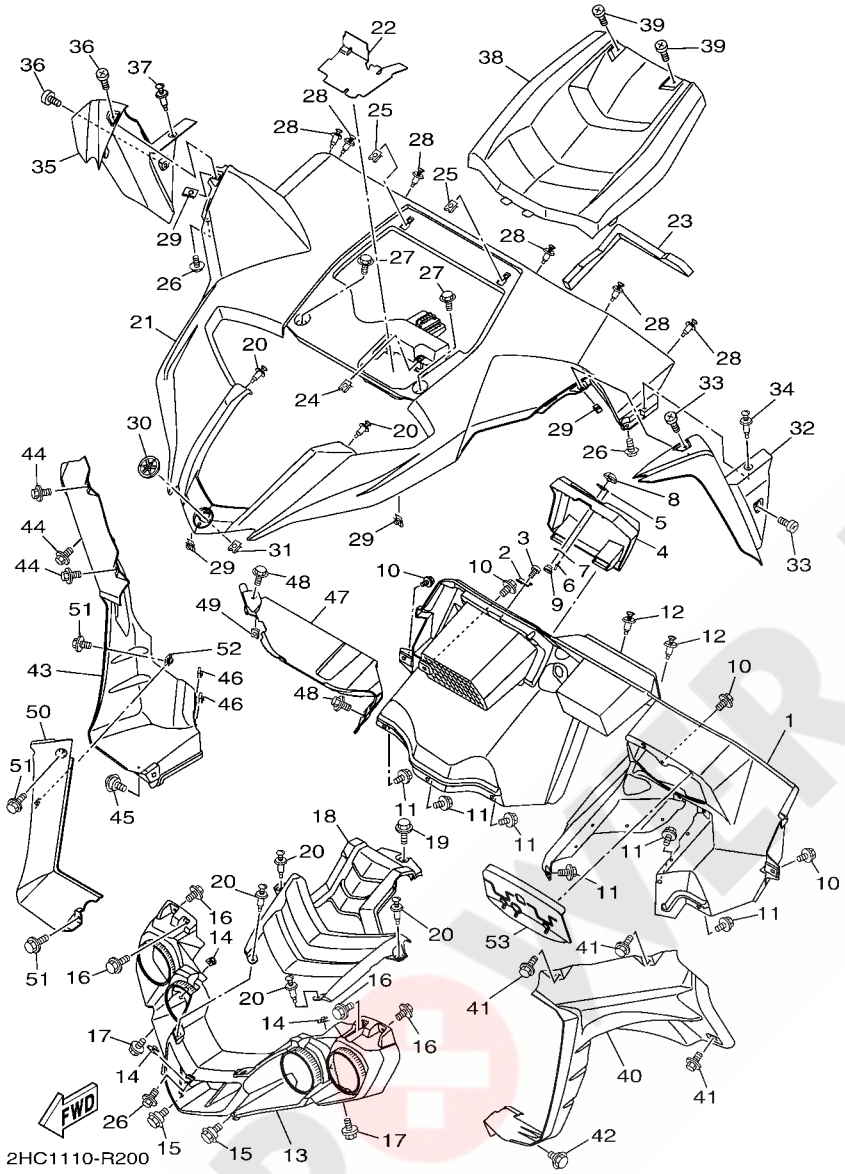

FIG. 20 FRONT FENDER

REF. NO.	PART NO.	DESCRIPTION	USA					REMARKS
28	90269–07803	RIVET	6					
29	90183–060A6	NUT, SPRING	4					
30	1XD–F175B–01	TUNING FORK MARK	1					
31	90183–06071	NUT, SPRING	2					
32	2HC–K8187–00	FLAP, FRONT FENDER	1					
33	90110–06200	BOLT, HEXAGON SOCKET HEAD	2					
34	90269–07803	RIVET	1					
35	2HC–K818K–00	FLAP, FRONT FENDER	1					
36	90110–06200	BOLT, HEXAGON SOCKET HEAD	2					
37	90269–07803	RIVET	1					
38	2HC–F1982–10	HOOD 1	1					
39	90110–06200	BOLT, HEXAGON SOCKET HEAD	2					
40	2HC–E246A–00	COVER 1	1					
41	90119–06226	BOLT, WITH WASHER	3					
42	90109–06202	BOLT	1					
43	2HC–E246E–00	COVER 2	1					
44	90119–06226	BOLT, WITH WASHER	3					
45	90109–06202	BOLT	1					
46	90183–060A6	NUT, SPRING	2					
47	2HC–F3383–00	COVER, DUST SEAL 1	1					
48	90119–06226	BOLT, WITH WASHER	2					
49	90183–060A6	NUT, SPRING	1					
50	2HC–F3384–00	COVER, DUST SEAL 2	1					
51	90119–06226	BOLT, WITH WASHER	3					
52	90183–060A6	NUT, SPRING	1					
53	2HC–F338G–00	COVER, SEAL 3	1					

POWER PARTS By SQUAD

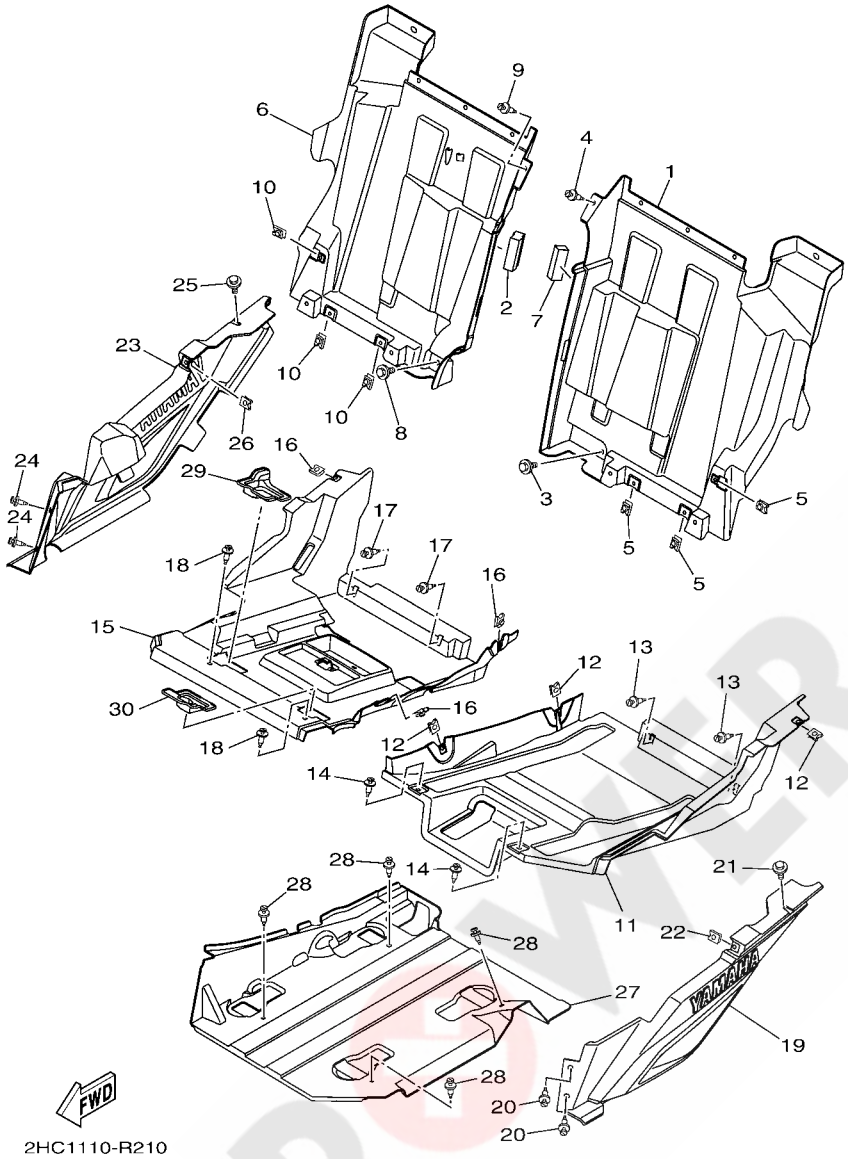

FIG. 21 SIDE COVER

REF. NO.	PART NO.	DESCRIPTION	USA					REMARKS
1	2HC–F2327–01	MUD GUARD 1	1					
2	90520–20007	DAMPER, PLATE	1					
3	90119–06226	BOLT, WITH WASHER	1					
4	90269–07803	RIVET	1					
5	90183–060A6	NUT, SPRING	3					
6	2HC–F2328–01	MUD GUARD 2	1					
7	90520–20006	DAMPER, PLATE	1					
8	90119–06226	BOLT, WITH WASHER	1					
9	90269–07803	RIVET	1					
10	90183–060A6	NUT, SPRING	3					
11	2HC–F84A3–00	PLATE, UNDER 1	1					
12	90183–060A6	NUT, SPRING	3					
13	90269–07803	RIVET	2					
14	90269–07803	RIVET	2					
15	2HC–F84A4–00	PLATE, UNDER 2	1					
16	90183–060A6	NUT, SPRING	3					
17	90269–07803	RIVET	2					
18	90269–07803	RIVET	2					
19	2HC–F1731–00	COVER, SIDE 3	1					
20	90269–07803	RIVET	2					
21	90119–06226	BOLT, WITH WASHER	1					
22	90183–060A6	NUT, SPRING	1					
23	2HC–F1741–00	COVER, SIDE 4	1					
24	90269–07803	RIVET	2					
25	90119–06226	BOLT, WITH WASHER	1					
26	90183–060A6	NUT, SPRING	1					
27	2HC–F84A5–00	PLATE, UNDER 3	1					

POWER PARTS By 4QUAD

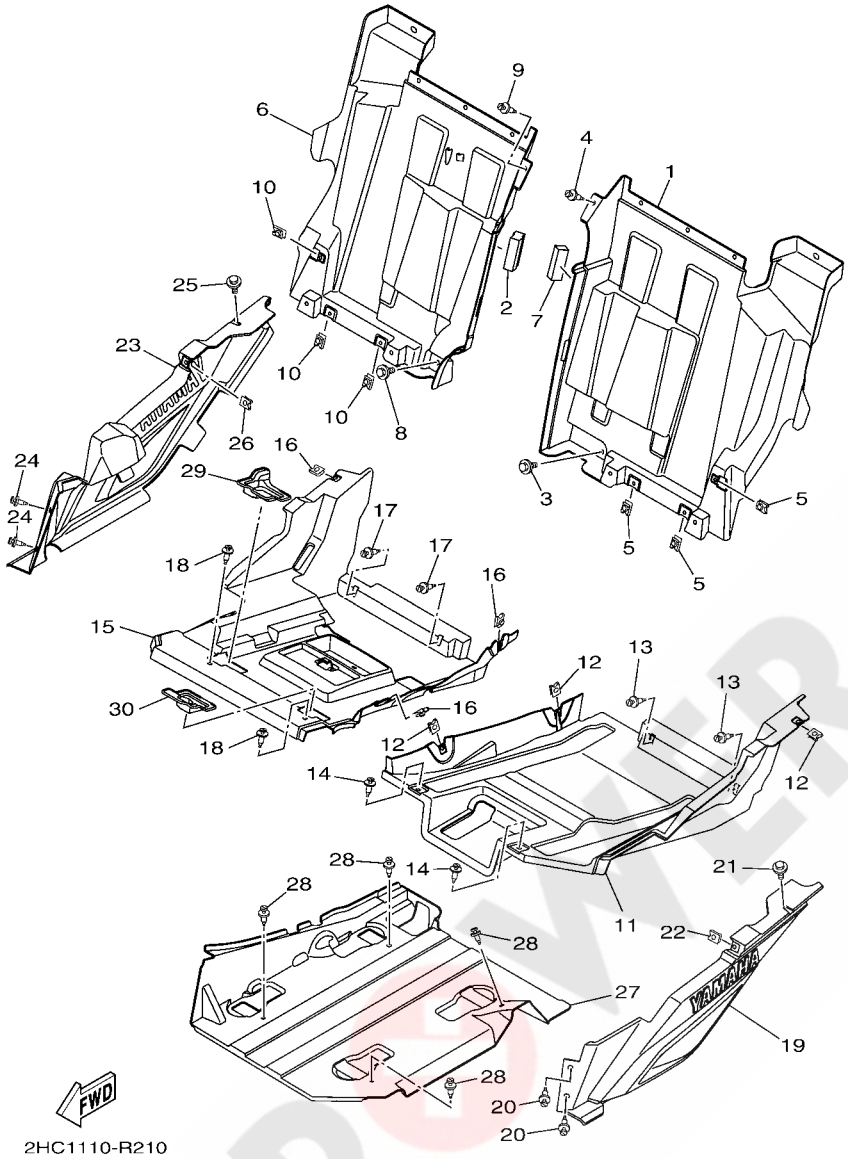

FIG. 21 SIDE COVER

REF. NO.	PART NO.	DESCRIPTION	USA					REMARKS
28	90269–07803	RIVET	4					
29	2HC–F8483–00	PLATE, RUBBER 1	1					
30	2HC–F8484–00	PLATE, RUBBER 2	1					

POWER PARTS By 4xQUAD

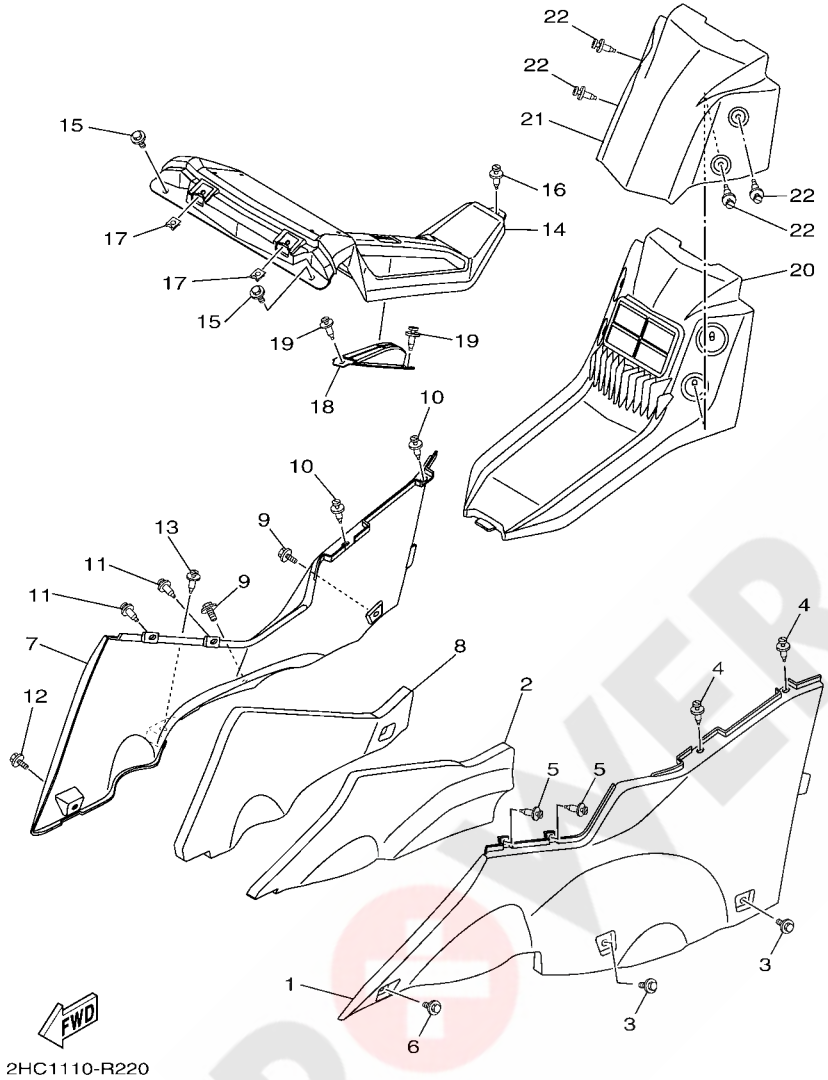

FIG. 22 SIDE COVER 2

REF. NO.	PART NO.	DESCRIPTION	USA					REMARKS
1	2HC–F837L–00	PANEL, CONSOLE 1	1					
2	2HC–2172S–00	INSULATOR 3	1					
3	90119–06226	BOLT, WITH WASHER	2					
4	90269–07803	RIVET	2					
5	90269–07803	RIVET	2					
6	90119–06226	BOLT, WITH WASHER	1					
7	2HC–F837M–00	PANEL, CONSOLE 2	1					
8	2HC–2173S–00	INSULATOR 4	1					
9	90119–06226	BOLT, WITH WASHER	2					
10	90269–07803	RIVET	2					
11	90269–07803	RIVET	2					
12	90119–06226	BOLT, WITH WASHER	1					
13	90269–07803	RIVET	1					
14	2HC–F171A–10	COVER, TOP	1					
15	90119–06226	BOLT, WITH WASHER	2					
16	90269–07803	RIVET	1					
17	90183–060A6	NUT, SPRING	2					
18	2HC–F6372–00	COVER, HANDLE LEVER 1	1					
19	90269–07803	RIVET	2					
20	2HC–F124E–11	COVER, BATTERY	1					
21	2HC–F117F–10	COVER	1					
22	90269–07803	RIVET	4					

POWER PARTS BY QUAD

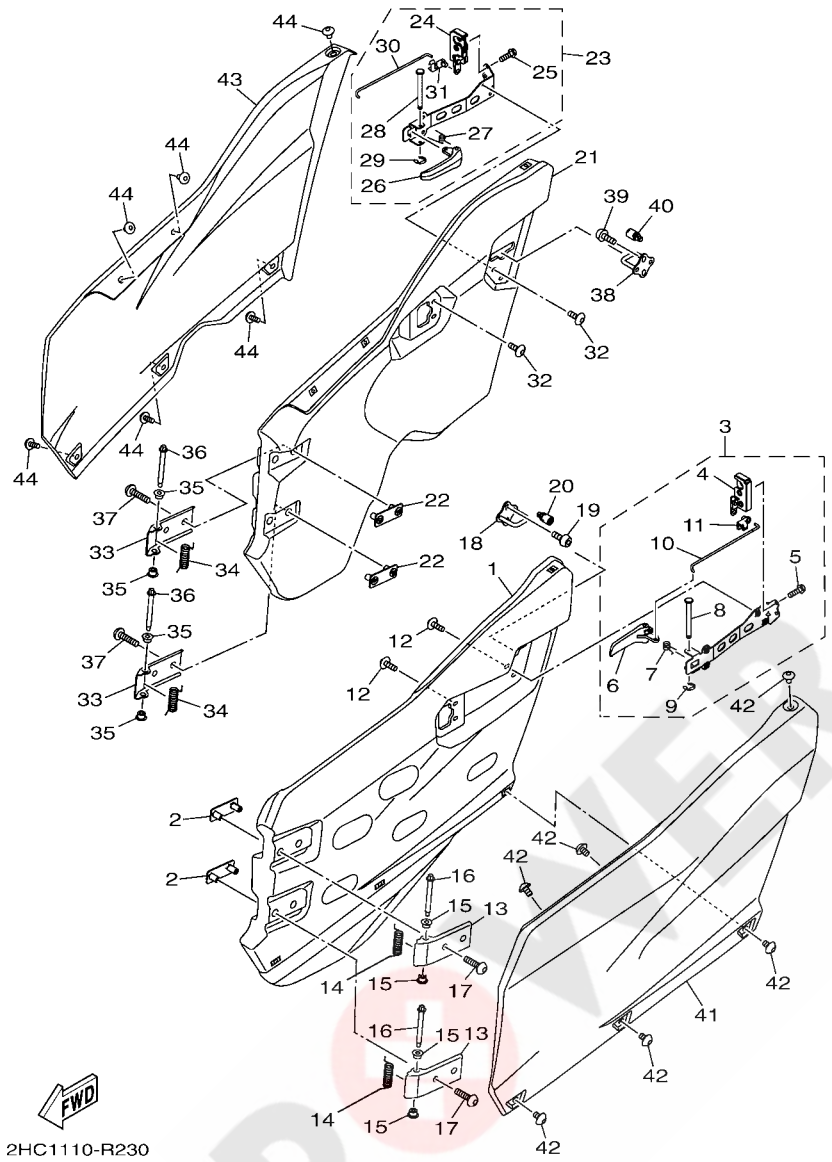

FIG. 23 SIDE COVER 3

REF. NO.	PART NO.	DESCRIPTION	USA					REMARKS
1	2HC–K8557–00	PNL., DOOR FR. LH	1					
2	2HC–F1736–00	NUT,PLATE	2					
3	2HC–K7171–00	BODY, LATCH 1	1					
4	2HC–F16A0–00	.LOCK ASSY	1					
5	95812–06020	.BOLT, FLANGE	2					
6	2HC–F17N1–00	.LEVER, LATCH 1	1					
7	2HC–F1742–00	.SPRING	1					
8	90249–05801	.PIN	1					
9	99002–04600	.CIRCLIP	1					
10	2HC–F7247–00	.ROD 1	1					
11	2HC–F2805–00	.CLIP, CABLE	1					
12	90111–06086	BOLT,HEX. SOCKET BUTTON	4					
13	2HC–K8554–00	STAY, FR. DOOR 1	2					
14	2HC–F463G–00	SPRG., HINGE	2					
15	2HC–F1748–00	COLLAR	4					
16	90109–068A8	BOLT	2					
17	90109–08856	BOLT	4					
18	2HC–F178J–00	LOCK	1					
19	92012–08012	BOLT, BUTTON HEAD	2					
20	2MB–F8378–00	PAD	1					
21	2HC–K8558–00	PNL., DOOR FR. RH	1					
22	2HC–F1736–00	NUT,PLATE	2					
23	2HC–K7172–00	BODY, LATCH 2	1					
24	2HC–F16B0–00	.LOCK ASSY 2	1					
25	95812–06020	.BOLT, FLANGE	2					
26	2HC–F17N1–00	.LEVER, LATCH 1	1					
27	2HC–F1742–00	.SPRING	1					

POWER PARTS By 4xQUAD

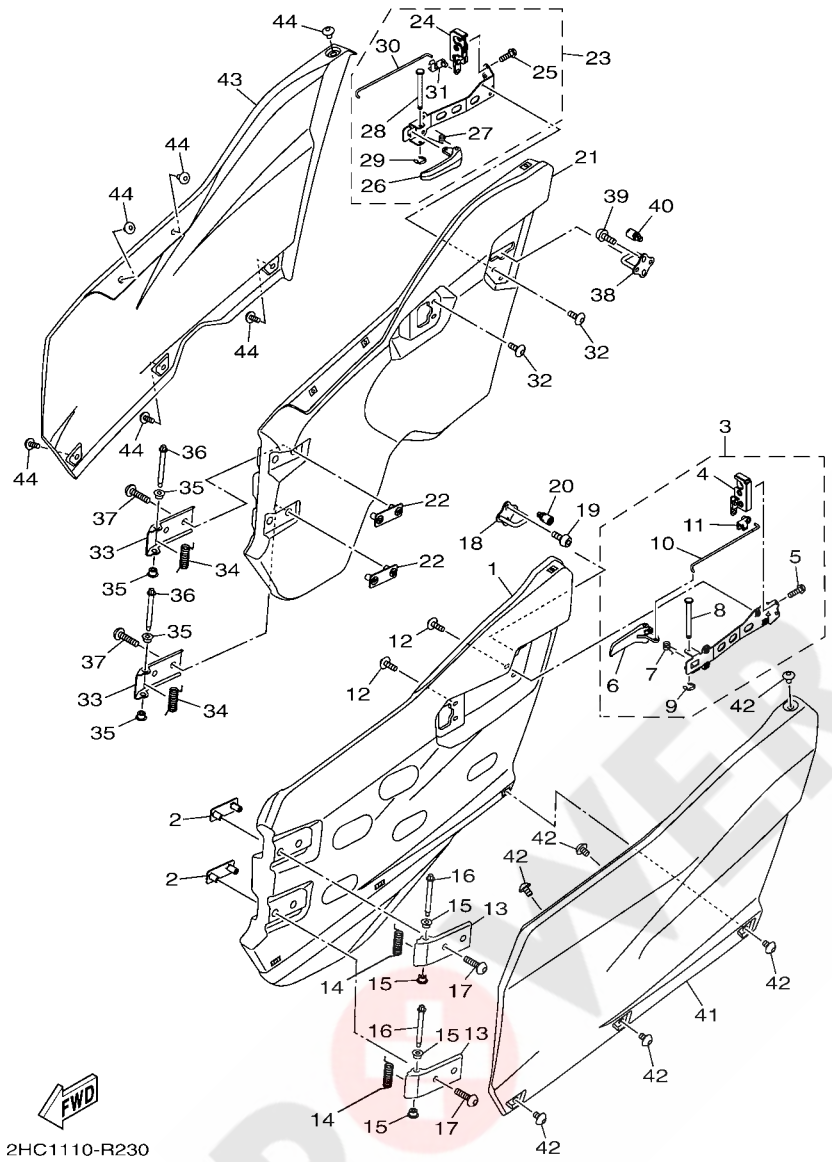

FIG. 23 SIDE COVER 3

REF. NO.	PART NO.	DESCRIPTION	USA					REMARKS
28	90249–05801	.PIN	1					
29	99002–04600	.CIRCLIP	1					
30	2HC–F7248–00	.ROD 2	1					
31	2HC–F2805–00	.CLIP, CABLE	1					
32	90111–06086	BOLT,HEX. SOCKET BUTTON	4					
33	2HC–K8554–00	STAY, FR. DOOR 1	2					
34	2HC–F463G–00	SPRG., HINGE	2					
35	2HC–F1748–00	COLLAR	4					
36	90109–068A8	BOLT	2					
37	90109–08856	BOLT	4					
38	2HC–F178J–00	LOCK	1					
39	92012–08012	BOLT, BUTTON HEAD	2					
40	2MB–F8378–00	PAD	1					
41	2HC–F17E0–00	SIDE COVER COMP. 1	1					
42	90110–06102	BOLT, HEXAGON SOCKET HEAD	6					
43	2HC–F17F0–00	SIDE COVER COMP. 2	1					
44	90110–06102	BOLT, HEXAGON SOCKET HEAD	6					

POWER PARTS By 4x4MAD

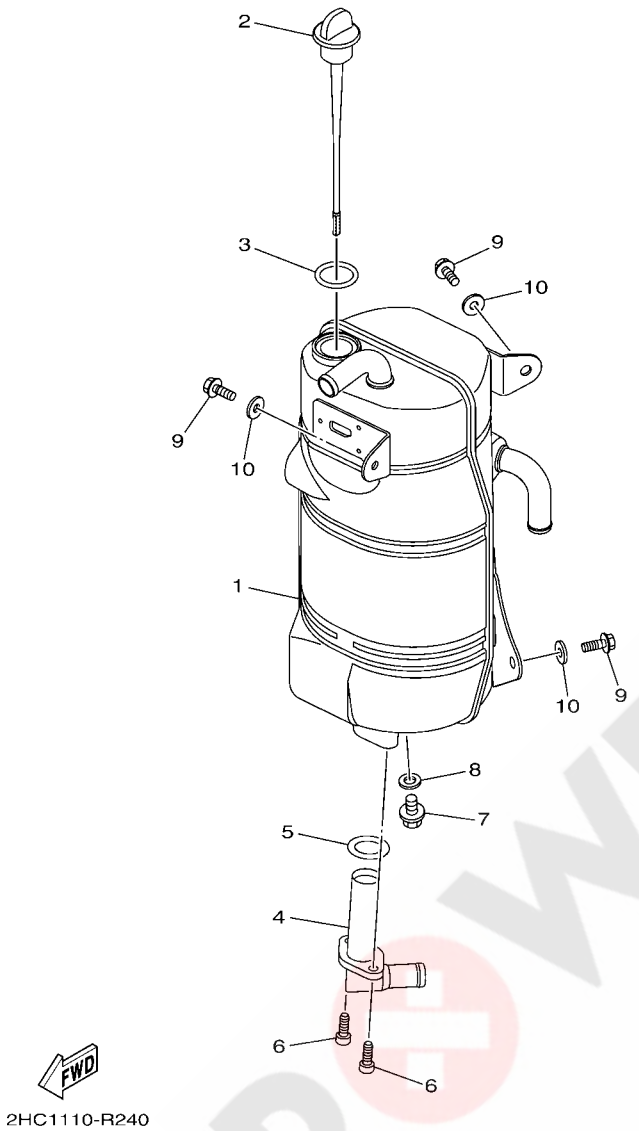

FIG. 24 OIL TANK

REF. NO.	PART NO.	DESCRIPTION	USA					REMARKS
1	2HC–21751–00	TANK, OIL	1					
2	2HC–85720–00	OIL LEVEL GAUGE ASSY	1					
3	93210–22006	O-RING	1					
4	8GL–13406–00	OIL PIPE COMP. 2	1					
5	93210–24001	O-RING	1					
6	91312–06016	BOLT	2					
7	95802–08012	BOLT, FLANGE	1					
8	90430–08204	GASKET	1					
9	95812–06016	BOLT, FLANGE	3					
10	90201–06102	WASHER, PLATE	3					

POWER PARTS By 4xQUAD

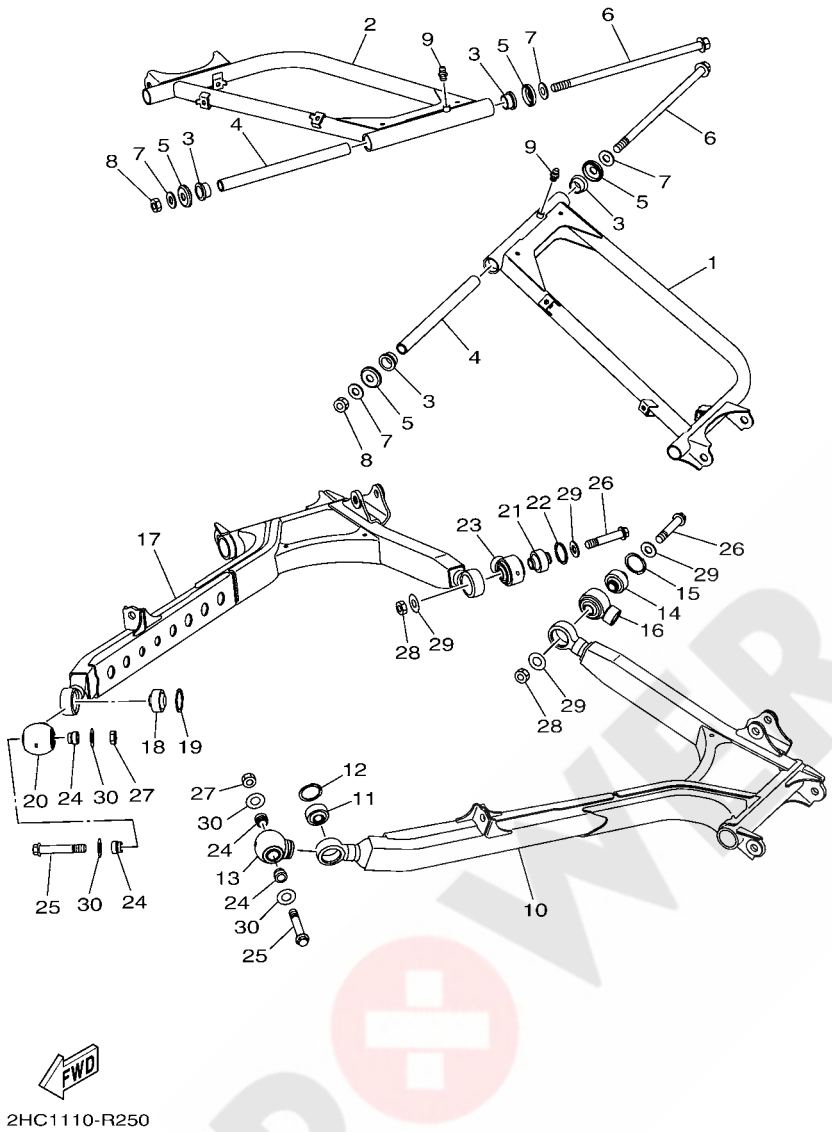

FIG. 25 REAR ARM

REF. NO.	PART NO.	DESCRIPTION	USA					REMARKS
1	2HC–F2104–10	RR. UPR. ARM COMP., 1	1					
2	2HC–F2105–10	RR. UPR. ARM COMP. 2	1					
3	90381–18003	BUSH, SOLID	4					
4	90387–12062	COLLAR	2					
5	1XD–23517–00	COVER, THRUST 1	4					
6	90105–12098	BOLT, FLANGE	2					
7	90201–12045	WASHER, PLATE	4					
8	90185–12007	NUT, SELF-LOCKING	2					
9	93700–06004	NIPPLE, GREASE	2					
10	2HC–F2106–10	RR. LWR. ARM COMP., 1	1					
11	2HC–23549–00	BALL JOINT 1	1					
12	99009–35500	CIRCLIP	1					
13	2HC–23527–00	SEAL, DUST 1	1					
14	2HC–23845–00	JOINT, UNIVERSAL 2	1					
15	99009–35500	CIRCLIP	1					
16	2HC–23528–00	SEAL, DUST 2	1					
17	2HC–F2107–10	RR. LWR. ARM COMP., 2	1					
18	2HC–23549–00	BALL JOINT 1	1					
19	99009–35500	CIRCLIP	1					
20	2HC–23527–00	SEAL, DUST 1	1					
21	2HC–23845–00	JOINT, UNIVERSAL 2	1					
22	99009–35500	CIRCLIP	1					
23	2HC–23528–00	SEAL, DUST 2	1					
24	2HC–23754–00	COLLAR 1	4					
25	90105–12095	BOLT, FLANGE	2					
26	90105–12100	BOLT, FLANGE	2					
27	90185–12007	NUT, SELF-LOCKING	2					

POWER PARTS By ATQUAD

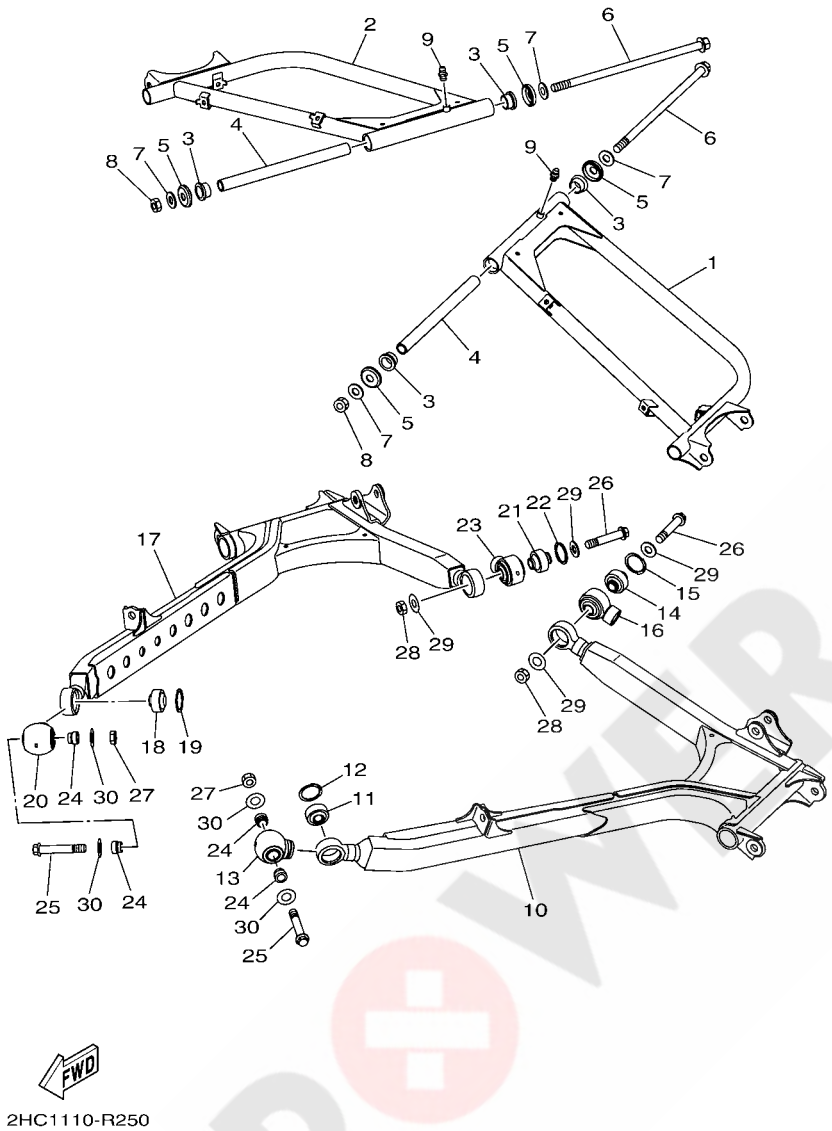

FIG. 25 REAR ARM

REF. NO.	PART NO.	DESCRIPTION	USA					REMARKS
28	90185–12007	NUT, SELF-LOCKING	2					
29	90201–12045	WASHER, PLATE	4					
30	90201–12045	WASHER, PLATE	4					

POWER PARTS By 4xQUAD

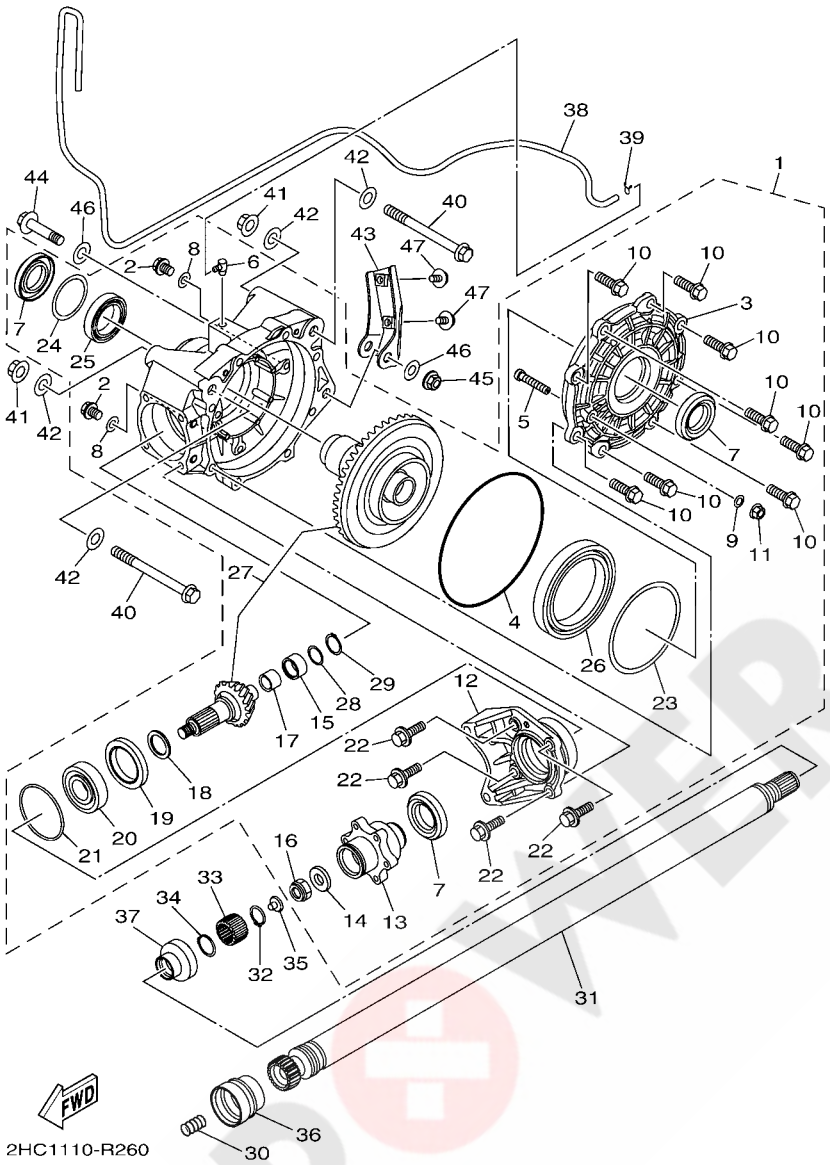

FIG. 26 DRIVE SHAFT

REF. NO.	PART NO.	DESCRIPTION	USA					REMARKS
1	2HC–G6101–03	REAR AXLE GEAR CASE ASSY	1					
2	1XD–E2228–00	.BOLT	2					
3	2HC–G6152–00	.HOUSING, BEARING	1					
4	2HC–G613A–00	.O-RING	1					
5	2HC–G6156–00	.STOPPER, RING GEAR	1					
6	1CT–E5371–00	.BREATHER	1					
7	1XD–E511B–00	.OIL SEAL	3					
8	1CT–E1195–00	.GASKET	2					
9	1CT–G6819–00	.GASKET	1					
10	2HC–E2157–00	.BOLT	8					
11	1CT–E3275–00	.NUT, ADJUSTING	1					
12	2HC–G2134–00	.COVER	1					
13	2HC–G6126–00	.COUPLING	1					
14	2HC–G5677–00	.WASHER	1					
15	1XD–E1428–00	.BEARING 1	1					
16	2HC–G7579–00	.NUT	1					
17	1XD–G5319–00	.CLIP	1					
18	1XD–G7531–00	.WHEEL, SPROCKET 1	1					
19	2HC–G4583–00	.NUT	1					
20	93306–30574	.BEARING	1					
21	1XD–E1614–00	.OIL RING, PISTON	1					
22	1XD–G2478–00	.BOLT, LOCK PLATE	4					
23	2HC–G5567–00	.SHIM	1					
24	1XD–G5577–00	.SHIM	1					
25	1XD–E142B–00	.BEARING 4	1					
26	2HC–E1429–00	.BEARING 2	1					
27	2HC–G61A0–00	.RING GEAR SET	1					

POWER PARTS By 4xQUAD

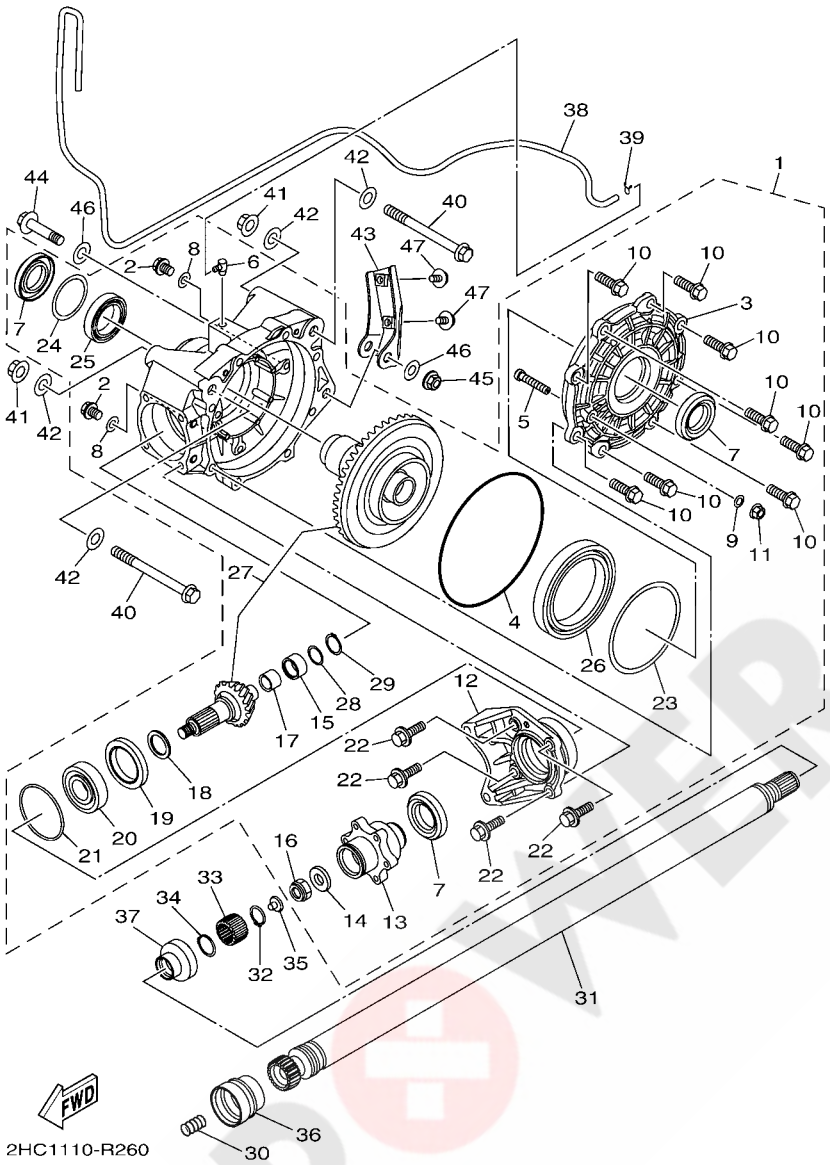

FIG. 26 DRIVE SHAFT

REF. NO.	PART NO.	DESCRIPTION	USA					REMARKS
28	2HC–F2149–00	.WASHER	1					
29	2HC–F5841–00	.RING,RETAINER	1					
30	90501–20361	SPRING, COMPRESSION	1					
31	2HC–46172–00	SHAFT, DRIVE	1					
32	99009–22400	CIRCLIP	1					
33	2HC–46126–00	COUPLING	1					
34	93410–26067	CIRCLIP	1					
35	5KM–46559–00	DAMPER	1					
36	2HC–46137–00	SEAL 2	1					
37	2HC–46136–00	SEAL 1	1					
38	90445–074F6	HOSE (L1300)	1					
39	90467–07029	CLIP	1					
40	95812–12130	BOLT, FLANGE	2					
41	90185–12002	NUT, SELF-LOCKING	2					
42	92902–12200	WASHER	4					
43	2HC–F1981–01	BRKT., RR. AXLE	1					
44	90105–12082	BOLT, FLANGE	1					
45	90185–12002	NUT, SELF-LOCKING	1					
46	92902–12200	WASHER	2					
47	95812–10016	BOLT, FLANGE	2					

POWER PARTS By 4xQUAD

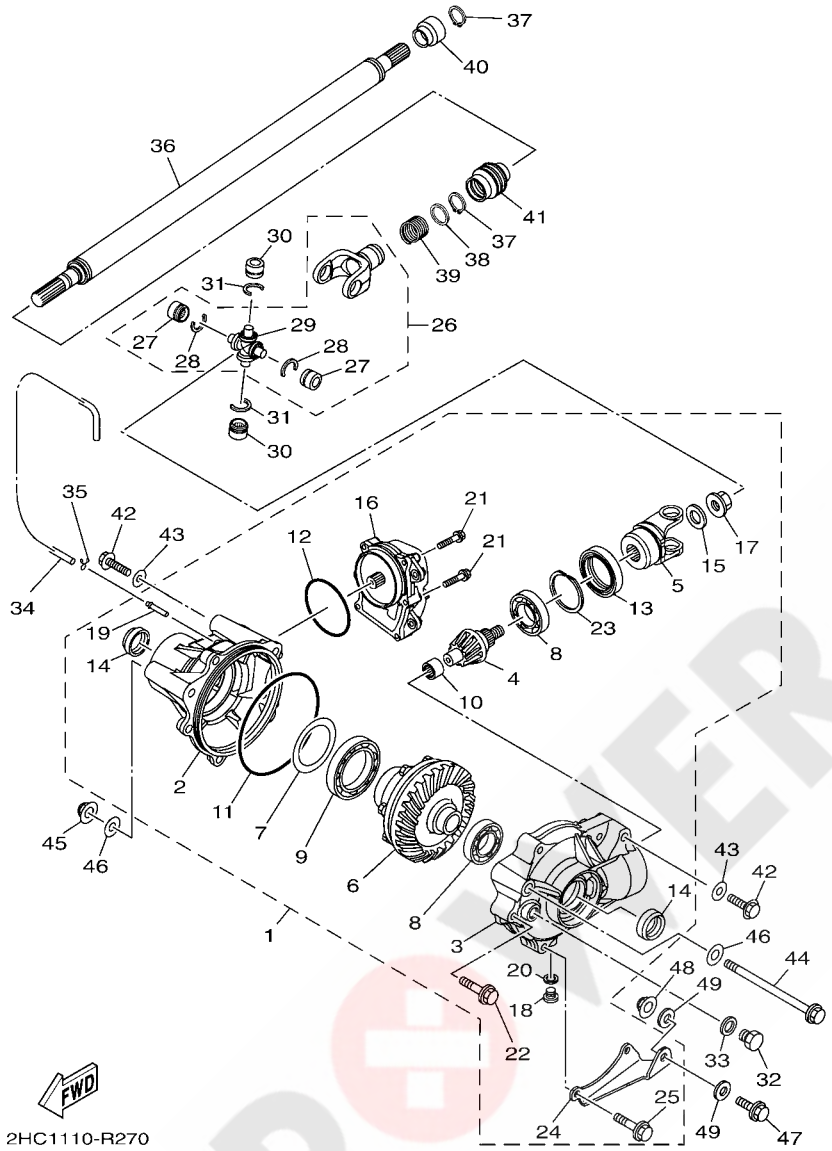

FIG. 27 FRONT DIFFERENTIAL

REF. NO.	PART NO.	DESCRIPTION	USA					REMARKS
1	2HC–46160–00	FRONT AXLE GEAR CASE COMP.	1					
2	1XD–46162–00	.HOUSING, BEARING 2	1					
3	2HC–46161–00	.HOUSING, SHAFT DRIVE 2	1					
4	2HC–46141–00	.PINION, DRIVE 2	1					
5	4S1–46146–01	.YOKE, JOINT 2	1					
6	2HC–46470–00	.LIMITED SLIP DIFF. ASSY	1					
7	3B4–46117–00	.SHIM, RING GEAR (0.1T)	1					UR
	3B4–46117–10	.SHIM, RING GEAR (0.2T)	1					UR
	3B4–46117–20	.SHIM, RING GEAR (0.3T)	1					UR
	3B4–46117–30	.SHIM, RING GEAR (0.4T)	1					UR
8	93306–00613	.BEARING	2					
9	3B4–46164–00	.BEARING 1	1					
10	3B4–46166–00	.BEARING 3	1					
11	3B4–46134–00	.O-RING 1	1					
12	3B4–46135–00	.O-RING 2	1					
13	93105–46001	.OIL SEAL	1					
14	3B4–46163–00	.SEAL, OIL 1	2					
15	90201–14021	.WASHER, PLATE	1					
16	1HP–4616A–00	.SERVO MOTOR COMP	1					
17	4WV–46145–10	.NUT 1	1					
18	90340–10001	.PLUG, STRAIGHT SCREW	1					
19	5GH–46293–00	.TUBE	1					
20	90430–10003	.GASKET	1					
21	95812–06014	.BOLT, FLANGE	3					
22	95812–08040	.BOLT, FLANGE	3					
23	3B4–46142–00	.RING,HOLE SNAP 1	1					
24	2HC–46114–00	.PLATE, COVER	1					

POWER PARTS By SQUAD

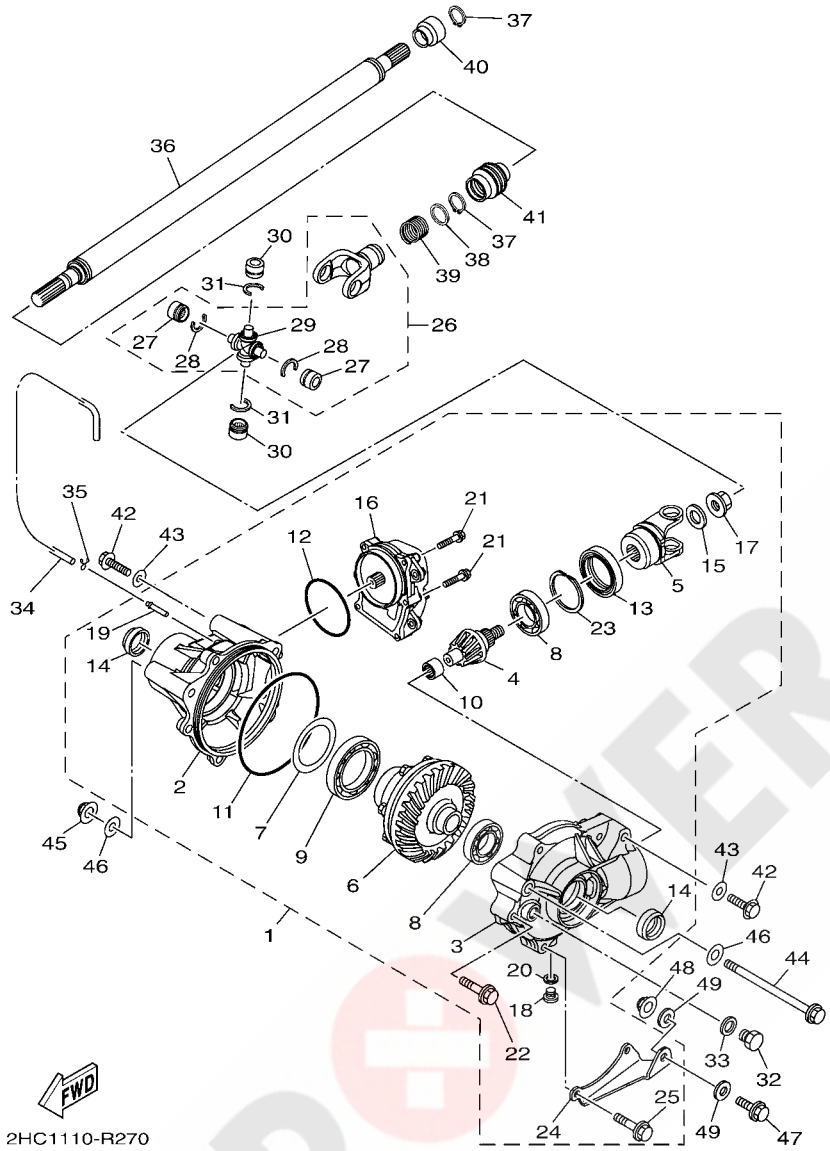

FIG. 27 FRONT DIFFERENTIAL

REF. NO.	PART NO.	DESCRIPTION	USA					REMARKS
25	95812–08050	.BOLT, FLANGE	2					
26	2HC–46107–00	CROSS JOINT COMP. 2	1					
27	93399–99948	.BEARING	2					
28	93440–20088	.CIRCLIP	2					
29	5GT–46187–00	.SPIDER	1					
30	93399–99948	BEARING	2					
31	93440–20088	CIRCLIP	2					
32	90340–14029	PLUG, STRAIGHT SCREW	1					
33	214–11198–01	GASKET	1					
34	90445–07047	HOSE (L1500)	1					
35	90467–07029	CLIP	1					
36	2HC–46109–00	DRIVE SHAFT COMP.	1					
37	99009–19400	CIRCLIP	2					
38	90201–20266	WASHER, PLATE (T=1.0)	1					
39	90501–235L9	SPRING, COMPRESSION	1					
40	5GT–46137–00	SEAL 2	1					
41	5GT–46136–00	SEAL 1	1					
42	90105–10255	BOLT, FLANGE	2					
43	90201–10035	WASHER, PLATE	2					
44	90105–12066	BOLT, FLANGE	1					
45	90185–12002	NUT, SELF-LOCKING	1					
46	92902–12200	WASHER	2					
47	90101–10038	BOLT	1					
48	90185–10011	NUT, SELF-LOCKING	1					
49	90201–10034	WASHER, PLATE	2					

POWER PARTS By 4xQUAD

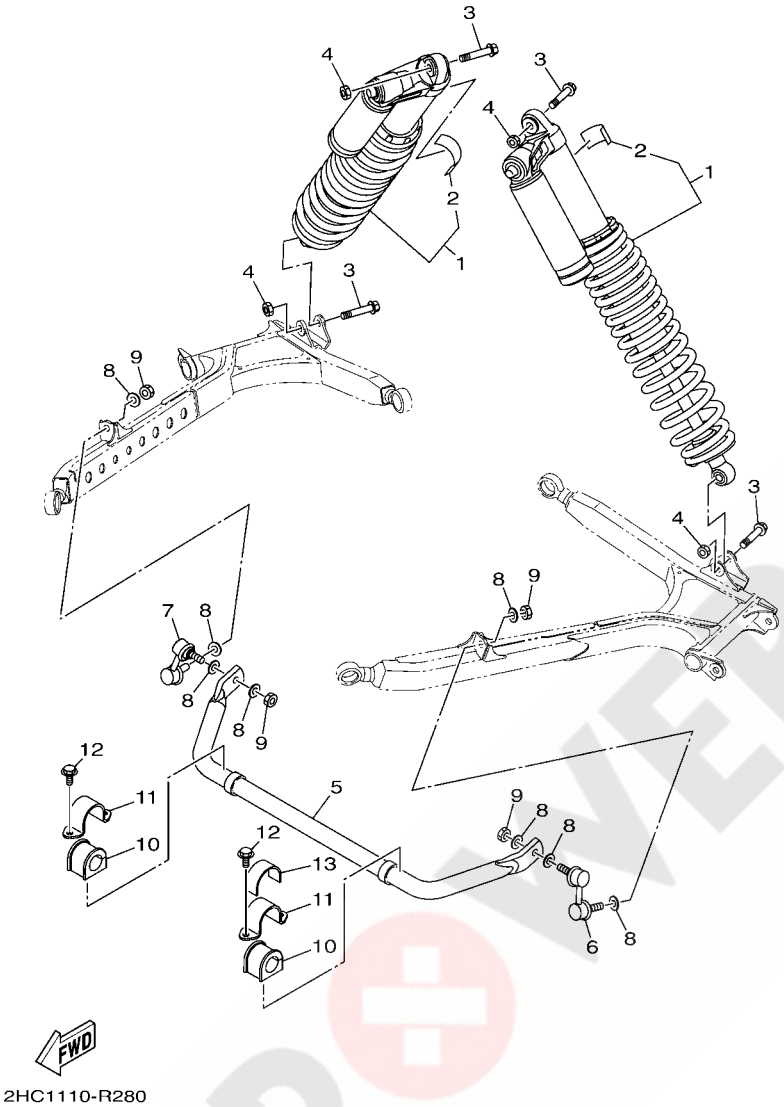

FIG. 28 REAR SUSPENSION

REF. NO.	PART NO.	DESCRIPTION	USA					REMARKS
1	2HC–F2200–00	SHOCK ABSORBER ASSY, REAR	2					
2	1HP–F2259–01	.LABEL, WARNING	1					
3	90105–12051	BOLT, FLANGE	4					
4	90185–12007	NUT, SELF-LOCKING	4					
5	2HC–G7491–10	BAR, STABILIZER	1					
6	2HC–2385L–00	JOINT, STABILIZER 1	1					
7	2HC–2385M–00	JOINT, STABILIZER 2	1					
8	90201–12045	WASHER, PLATE	8					
9	90185–12007	NUT, SELF-LOCKING	4					
10	2HC–F386G–01	BUSH, STABILIZER FRONT	2					
11	2HC–F386H–00	COVER, STABILIZER FRONT	2					
12	95812–10020	BOLT, FLANGE	4					
13	2HC–23421–00	PLATE, DAMPER 1	1					

POWER PARTS By ATQUAD

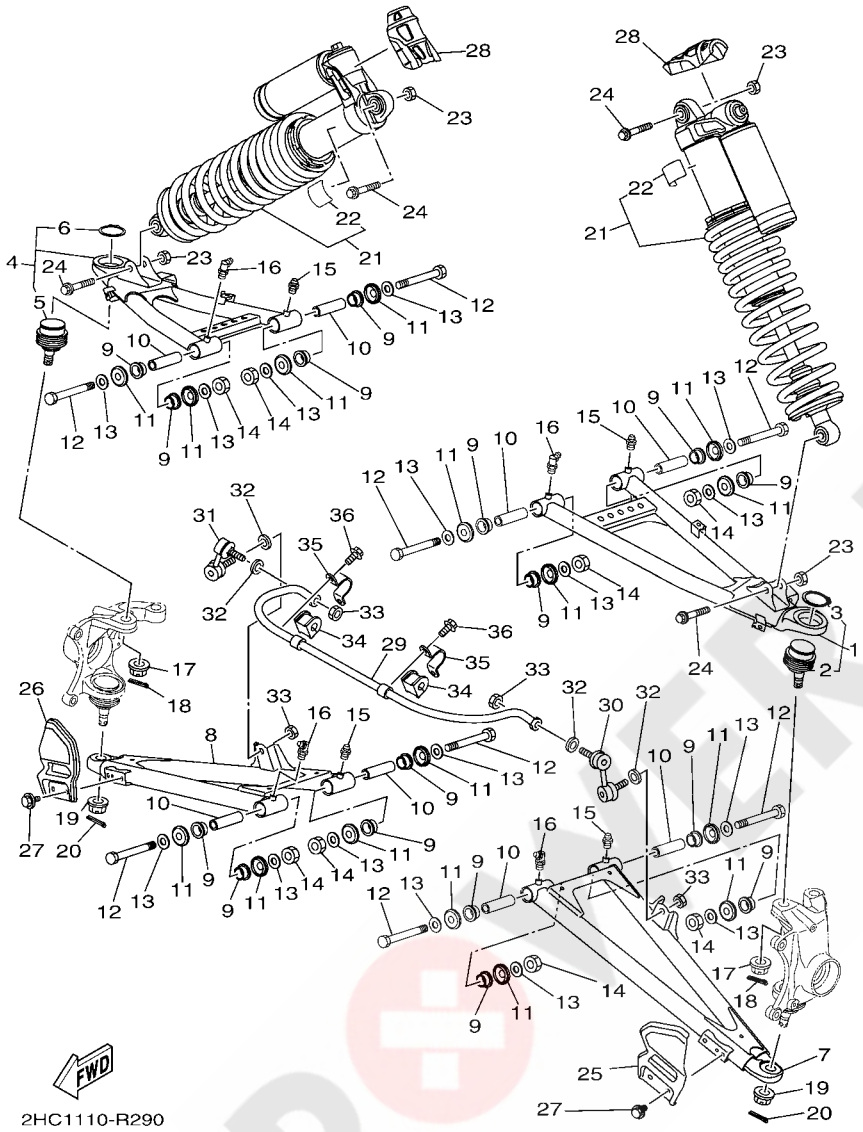

FIG. 29 FRONT SUSPENSION & WHEEL

REF. NO.	PART NO.	DESCRIPTION	USA					REMARKS
1	2HC–F3505–10	FRONT UPPER ARM SUB ASSY LH	1					
2	2HC–23579–00	.BALL JOINT 2	1					
3	93410–42096	.CIRCLIP	1					
4	2HC–F3506–10	FRONT UPPER ARM SUB ASSY RH	1					
5	2HC–23579–00	.BALL JOINT 2	1					
6	93410–42096	.CIRCLIP	1					
7	2HC–F3507–10	FRONT LOWER ARM SUB-ASSY (L.H)	1					
8	2HC–F3508–10	FRONT LOWER ARM SUB-ASSY (R.H)	1					
9	90381–18003	BUSH, SOLID	16					
10	90387–12063	COLLAR	8					
11	1XD–23517–00	COVER, THRUST 1	16					
12	90101–12050	BOLT	8					
13	90201–12045	WASHER, PLATE	16					
14	90185–12007	NUT, SELF-LOCKING	8					
15	93700–06004	NIPPLE, GREASE	4					
16	93700–06009	NIPPLE, GREASE	4					
17	90171–14005	NUT, CASTLE	2					
18	91402–30025	PIN, COTTER	2					
19	90171–14005	NUT, CASTLE	2					
20	91402–30025	PIN, COTTER	2					
21	2HC–F3390–00	SHOCK ABSORBER ASSY 2	2					
22	1HP–F2259–01	.LABEL, WARNING	1					
23	90185–10012	NUT, SELF-LOCKING	4					
24	90105–10283	BOLT, FLANGE	4					
25	2HC–F3123–00	COVER, UNDER 1	1					
26	2HC–F3133–00	COVER, LOWER 2	1					
27	90119–06212	BOLT, WITH WASHER	4					

PEWER PARTS By ATQUAD

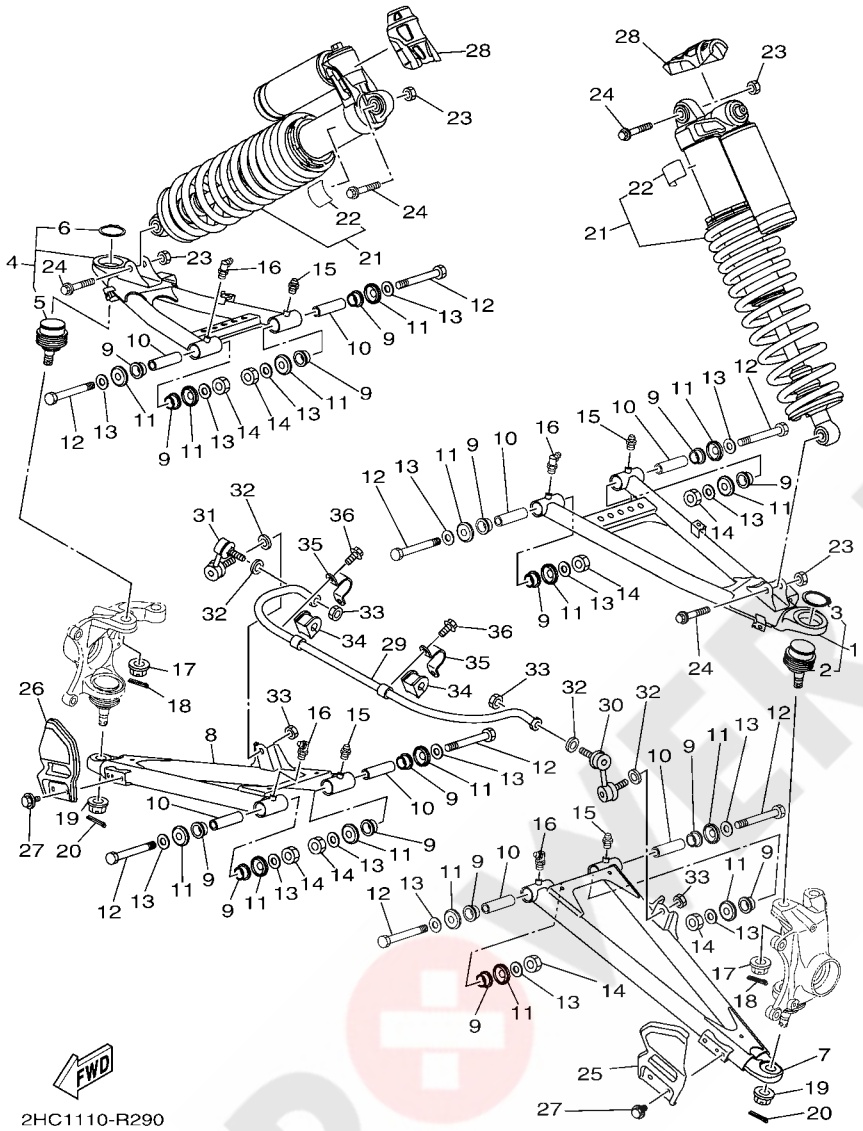

FIG. 29 FRONT SUSPENSION & WHEEL

REF. NO.	PART NO.	DESCRIPTION	USA					REMARKS
28	2HC–F198F–00	COVER 1	2					
29	8GN–2386E–00	BAR, STABILIZER FRONT	1					(14MM)
30	16B–2385L–10	JOINT, STABILIZER 1	1					
31	16B–2385M–10	JOINT, STABILIZER 2	1					
32	90201–10035	WASHER, PLATE	4					
33	90185–10012	NUT, SELF-LOCKING	4					
34	2HC–F3583–00	BUSH	2					
35	2HC–F386B–00	BRKT., STABILIZER FR.	2					
36	95812–08014	BOLT, FLANGE	4					

PEWER PARTS By axQUAD

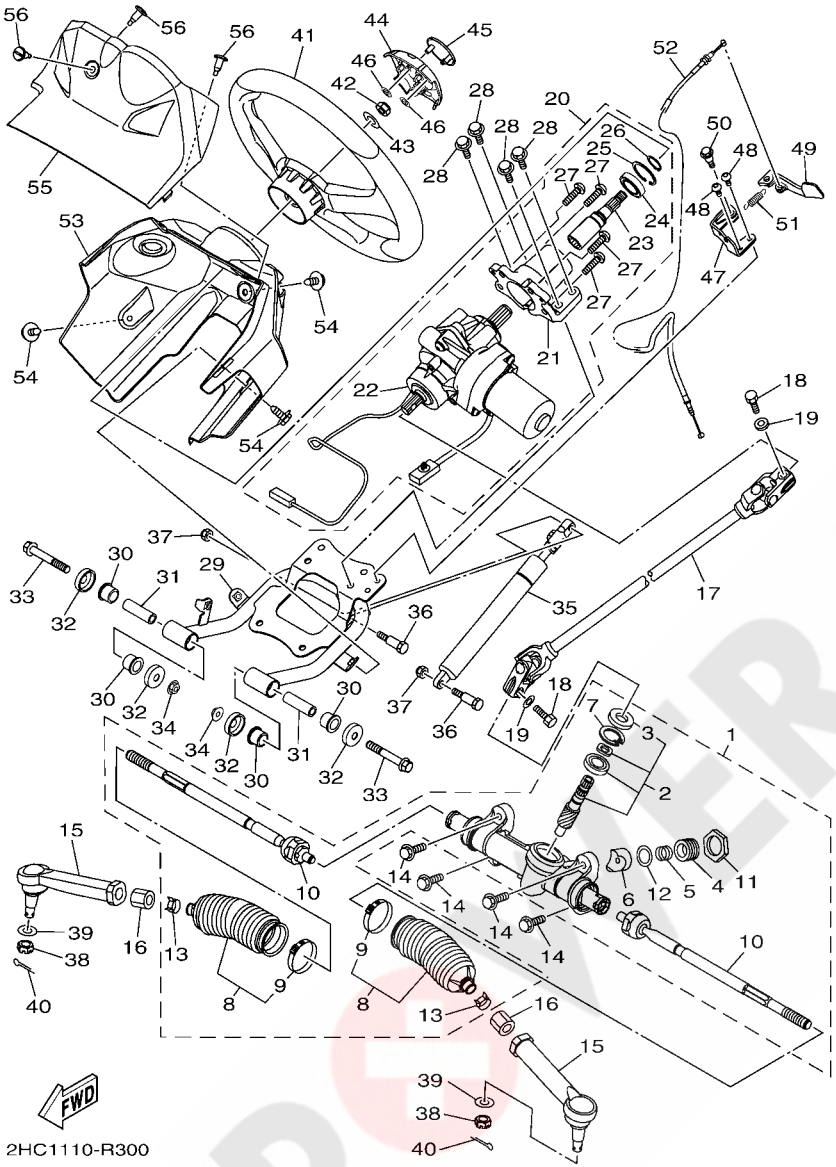

FIG. 30 STEERING

REF. NO.	PART NO.	DESCRIPTION	USA					REMARKS
1	2HC–F3400–01	STEERING ASSY	1					
2	2HC–F38G0–00	.STEERING PINION SET	1					
3	1XD–F3844–00	..SEAL	1					
4	1XD–F387G–00	.COVER, ADJUST	1					
5	1XD–F387K–00	.SPRING, PRESSURE	1					
6	1XD–F387F–00	.PAD, PRESSURE	1					
7	1XD–F387J–00	.RING, STOPPER	1					
8	1XD–F1208–00	.SEAL SET, 1	2					
9	1XD–F3489–00	..BAND	1					
10	2HC–F38H0–00	.RACK END SET	2					
11	1XD–F178K–00	.LOCK ASSY	1					
12	1XD–F3165–00	.WASHER, FELT	1					
13	1XD–F3447–00	.CLIP	2					
14	95022–10030	BOLT, FLANGE	4					
15	2HC–23841–00	JOINT, UNIVERSAL 1	2					
16	2HC–F3833–00	NUT 1	2					
17	2HC–F3840–00	STEERING SHAFT ASSY	1					
18	91312–08025	BOLT	2					
19	90201–083P5	WASHER, PLATE	2					
20	2HC–23810–00	STEERING COLUMN ASSY	1					
21	2HC–2254G–00	.SUPT., STRG. HSG.	1					
22	2HC–238B0–00	.POWER STRG. ACTUATOR ASSY	1					
23	2HC–23849–00	.SHAFT 1	1					
24	93306–97201	.BEARING	1					
25	99009–40500	.CIRCLIP	1					
26	99009–22400	.CIRCLIP	1					
27	92012–08030	.BOLT, BUTTON HEAD	4					

POWER PARTS By 4WD

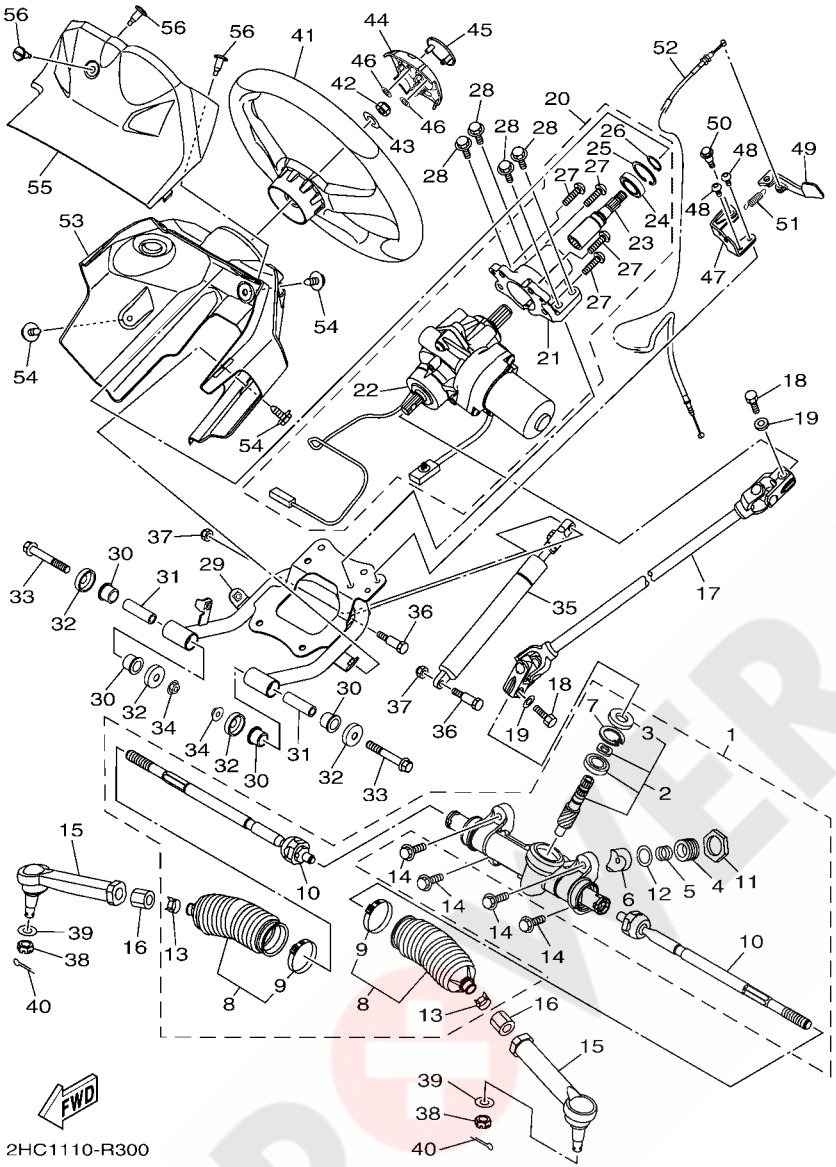

FIG. 30 STEERING

REF. NO.	PART NO.	DESCRIPTION	USA					REMARKS
28	95812–08025	BOLT, FLANGE	4					
29	2HC–F3870–00	STEERING GATE COMP.	1					
30	90381–15088	BUSH, SOLID	4					
31	90387–10111	COLLAR	2					
32	5YT–23517–00	COVER, THRUST 1	4					
33	90105–10267	BOLT, FLANGE	2					
34	95602–10200	NUT, U FLANGE	2					
35	2HC–F3855–00	SPRING, DAMPER	1					
36	90109–06255	BOLT	2					
37	95702–06300	NUT, NYLON	2					
38	90171–12001	NUT, CASTLE	2					
39	90201–12045	WASHER, PLATE	2					
40	91402–20020	PIN, COTTER	2					
41	2HC–F3838–00	WHEEL, STEERING	1					
42	90185–12008	NUT, SELF-LOCKING	1					
43	92902–12200	WASHER	1					
44	2HC–F3818–00	COVER, STEERING	1					
45	1XD–F175B–01	TUNING FORK MARK	1					
46	90183–06071	NUT, SPRING	2					
47	2HC–F3874–01	HOLDER, WIRE	1					
48	92012–06012	BOLT, BUTTON HEAD	2					
49	2HC–F6152–00	LEVER, REVERSE	1					
50	90109–06799	BOLT	1					
51	90506–09009	SPRING, TENSION	1					
52	2HC–2637E–00	CABLE, CONTROL 1	1					
53	2HC–F387G–00	COVER, ADJUST	1					
54	90119–06226	BOLT, WITH WASHER	3					

POWER PARTS By 4WD

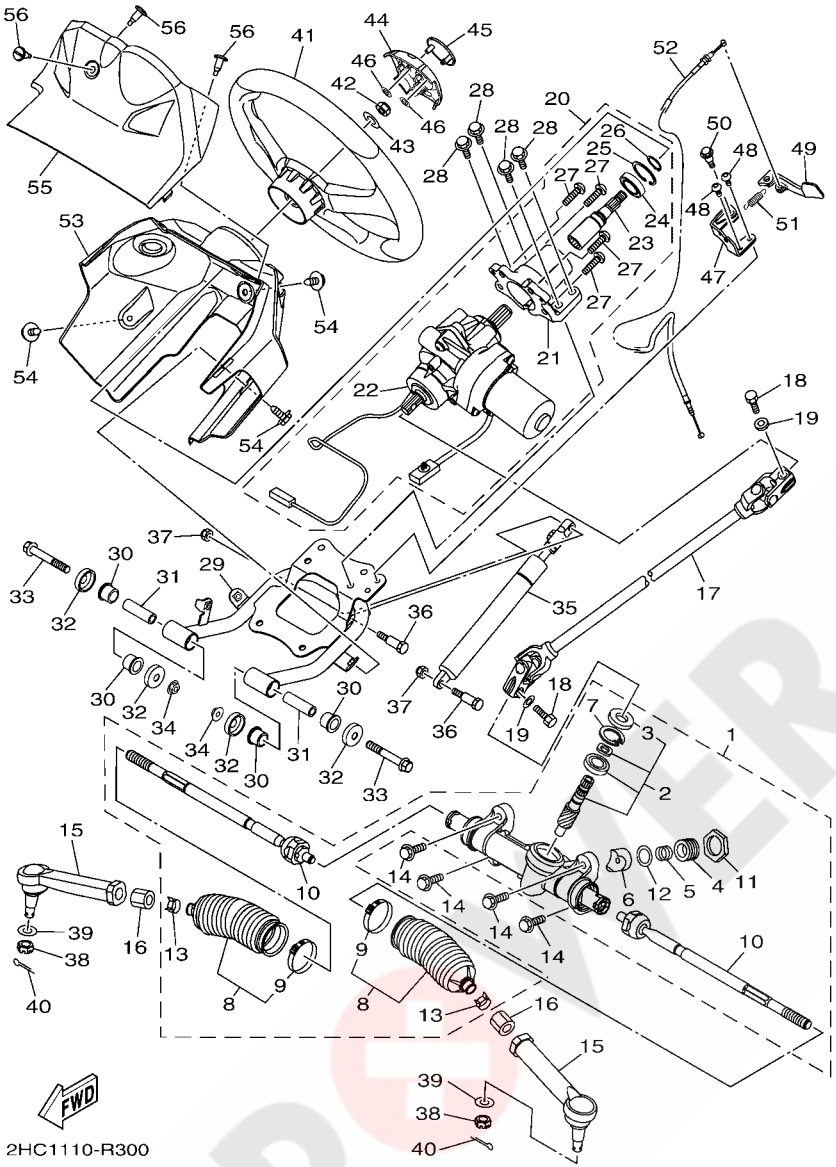

FIG. 30 STEERING

REF. NO.	PART NO.	DESCRIPTION	USA					REMARKS
55	2HC–H3559–01	COVER, METER	1					
56	90269–07803	RIVET	3					

POWER PARTS By 4xQUAD

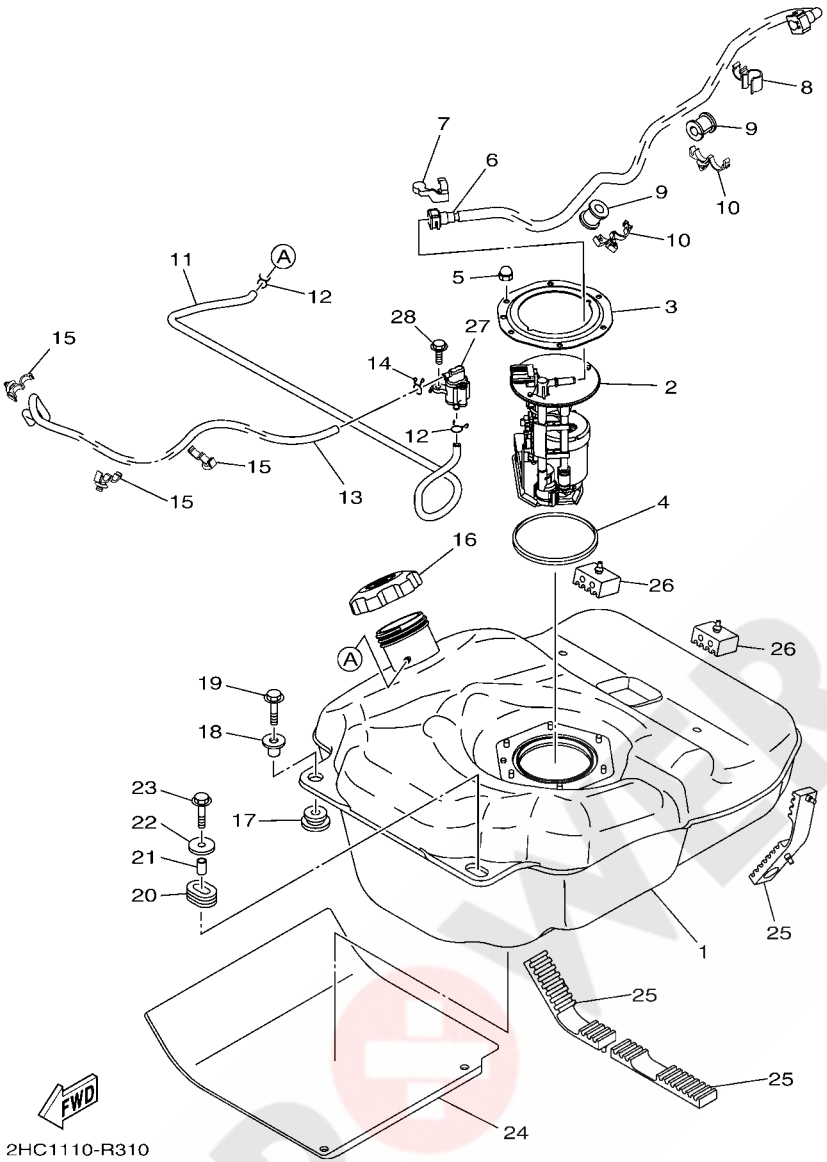

FIG. 31 FUEL TANK

REF. NO.	PART NO.	DESCRIPTION	USA					REMARKS
1	2HC–F4110–00	FUEL TANK COMP.	1					
2	B16–13907–00	FUEL PUMP COMP.	1					
3	3B4–24491–00	BRACKET, FUEL PUMP	1					
4	1S3–24486–00	O-RING	1					
5	95302–06800	NUT, CROWN	6					
6	2HC–13971–00	PIPE, FUEL 1	1					
7	90464–14004	CLAMP	1					
8	90464–15007	CLAMP	1					
9	90480–20543	GROMMET	2					
10	90464–20010	CLAMP	2					
11	90445–09830	HOSE (L930)	1					
12	90467–09006	CLIP	2					
13	90445–09831	HOSE (L1125)	1					
14	90467–09006	CLIP	1					
15	90464–12830	CLAMP	3					d: 12mm
16	2P5–24610–00	CAP ASSY	1					
17	90480–18016	GROMMET	1					
18	90387–07021	COLLAR	1					
19	95802–06030	BOLT, FLANGE	1					
20	90480–01400	GROMMET	1					
21	90387–061V1	COLLAR	1					
22	90201–065G8	WASHER, PLATE	1					
23	95802–06030	BOLT, FLANGE	1					
24	2HC–F414H–00	DAMPER, PLATE 1	1					
25	2HC–F4181–00	DAMPER, LOCATING 1	3					
26	2MB–F4182–00	DAMPER, LOCATING 2	2					
27	28P–24380–00	PIPE JOINT ASSY	1					

POWER PARTS By 4xQUAD

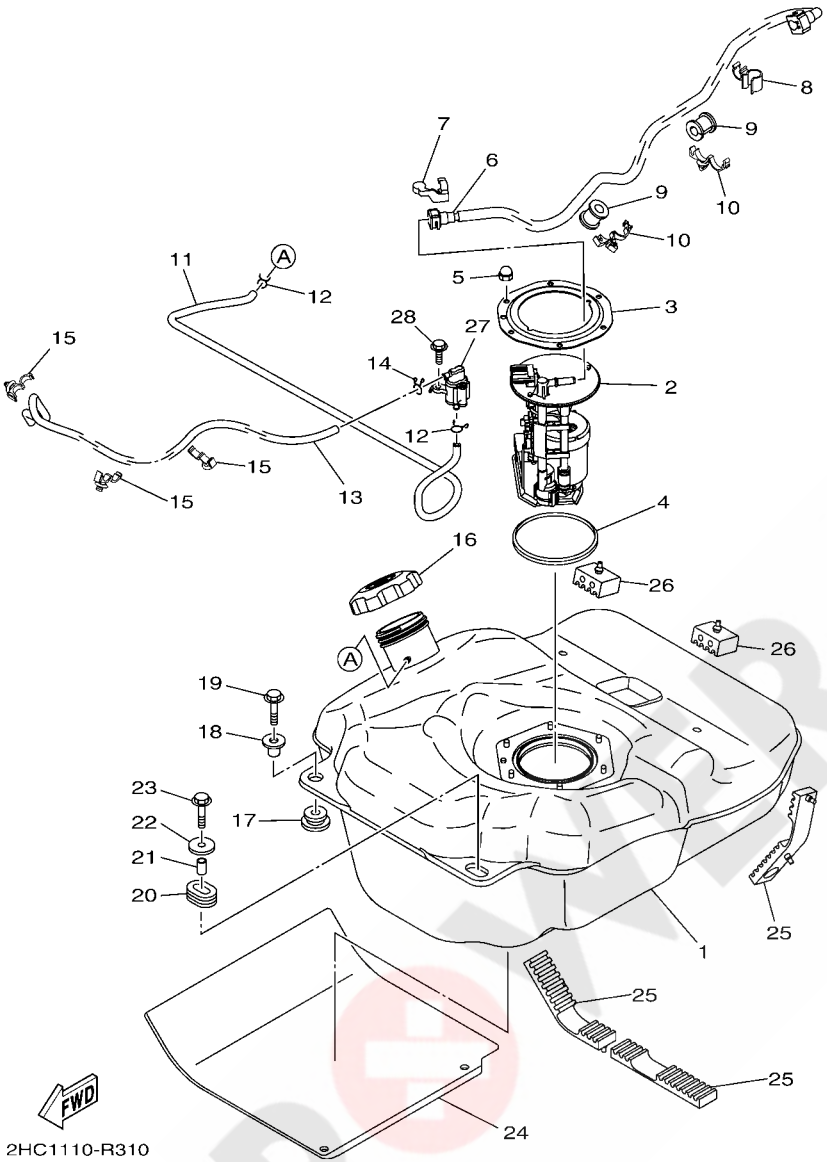

FIG. 31 FUEL TANK

REF. NO.	PART NO.	DESCRIPTION	USA					REMARKS
28	95022–06016	BOLT, FLANGE	1					

POWER PARTS By 4xQUAD

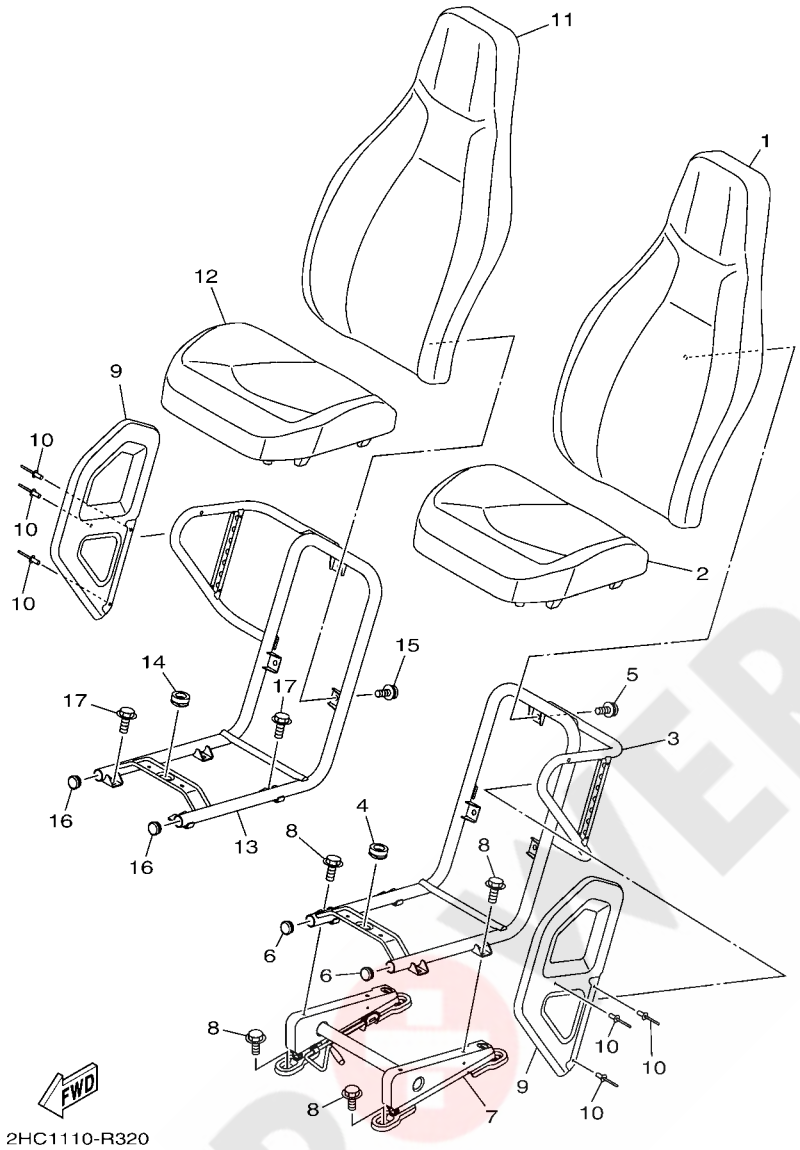

FIG. 32 SEAT

REF. NO.	PART NO.	DESCRIPTION	USA					REMARKS
1	2HC–F4790–10	SEAT BACK ASSY	1					
2	2HC–F4700–10	SEAT ASSY	1					
3	2HC–F473C–00	FRAME, SEAT 1	1					
4	1XD–F4742–00	GROMMET	1					
5	2PG–F4739–00	BOLT, SEAT FITTING	3					
6	2HC–F2417–00	PLUG	2					
7	2HC–F7270–00	ADJUSTER ASSY	1					
8	95812–08012	BOLT, FLANGE	8					
9	2HC–F475X–00	COVER,2	2					
10	90267–489U9	RIVET, BLIND	6					
11	2HC–F4790–10	SEAT BACK ASSY	1					
12	2HC–F4700–10	SEAT ASSY	1					
13	2HC–F473D–00	FRAME, SEAT 2	1					
14	1XD–F4742–00	GROMMET	1					
15	2PG–F4739–00	BOLT, SEAT FITTING	3					
16	2HC–F2417–00	PLUG	2					
17	95812–08012	BOLT, FLANGE	4					

POWER PARTS By 4QUAD

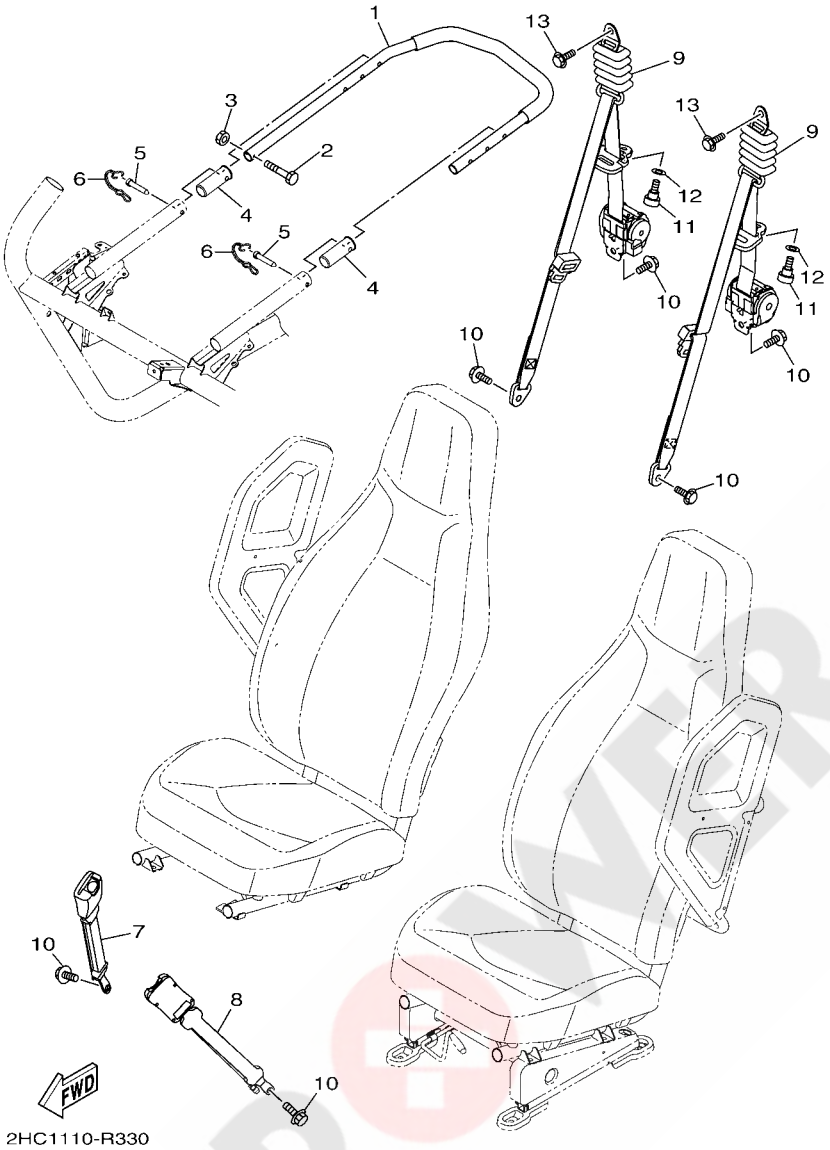

FIG. 33 SEAT 2

REF. NO.	PART NO.	DESCRIPTION	USA					REMARKS
1	2HC–F470J–00	ASSIST GRIP ASSY., 1	1					
2	97022–06040	BOLT, HEXAGON	1					
3	95612–06100	NUT, U	1					
4	1XD–F467K–00	BUSH, CAP	2					
5	1XD–F5926–00	BOLT	2					
6	1XD–F311F–00	SNAP, PIN	2					
7	2PG–F470R–00	FR. BELT RECEIVER ASSY	1					
8	2PG–F470R–10	FR. BELT RECEIVER ASSY	1					
9	1XD–F470L–00	FR. SEAT BELT ASSY 1	2					
10	95812–12020	BOLT, FLANGE	6					
11	16B–F3394–01	BOLT, SPECIAL	2					
12	90201–11801	WASHER, PLATE	2					
13	90111–12002	BOLT,HEX. SOCKET BUTTON	2					

POWER PARTS By ATQUAD

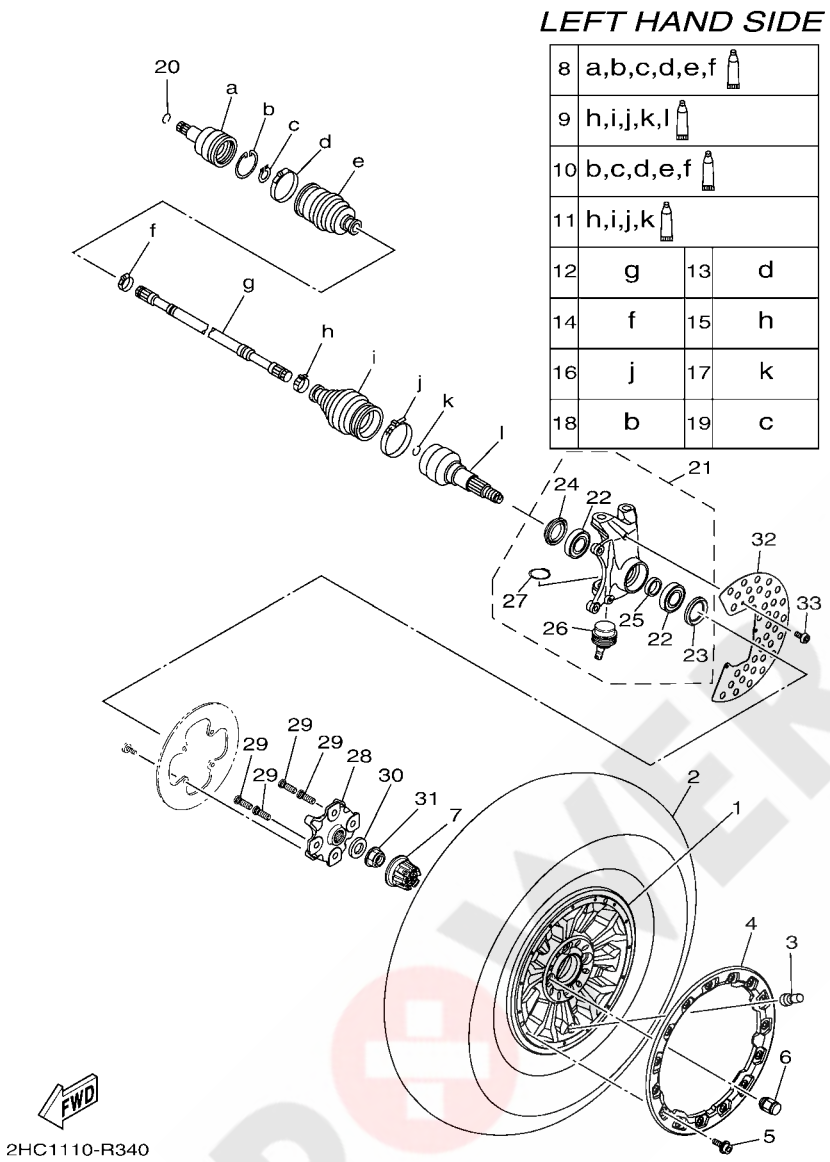

FIG. 34 FRONT WHEEL

REF. NO.	PART NO.	DESCRIPTION	USA					REMARKS
1	2HC–F5168–50	CAST WHEEL, FRONT	1					
2	94109–14809	TIRE (27X9.00R14 MU09 6PR TL)	1					MAXXIS
3	93900–00813	VALVE, RIM (TR413)	1					MAXXIS
4	2HC–F4658–50	PLATE, LOCK	1					
5	90105–068C3	BOLT, FLANGE	15					
6	90176–12800	NUT, CROWN	4					
7	2HC–F512A–00	CAP, WHEEL	1					
8	2HC–2510J–00	DOUBLE OFF SET JOINT	1					
9	2HC–2510F–00	BALL JOINT SET	1					
10	2HC–2510H–00	BOOT SET(DOUBLE OFFSET JOINT)	1					
11	2HC–2510G–00	BOOT SET (BALL JOINT)	1					
12	2HC–2518E–00	SHAFT	1					
13	2HC–2511H–00	BOOT BAND(DOUBLE OFFSET JOINT)	1					
14	2HC–2511G–00	BOOT BAND(DOUBLE OFFSET JOINT)	1					
15	2HC–2510U–00	BOOT BAND (BALL JOINT)	1					
16	2HC–2512G–00	BOOT BAND (BALL JOINT)	1					
17	2HC–2512H–00	CIRCLIP	1					
18	3B4–25182–00	CIRCLIP	1					
19	3B4–2512J–00	SNAP RING	1					
20	93450–22119	CIRCLIP	1					
21	2HC–F3501–00	STEERING KNUCKLE ASSY (LEFT)	1					
22	93306–206Y2	.BEARING	2					
23	93106–42800	.OIL SEAL	1					
24	93106–38800	.OIL SEAL	1					
25	90387–30008	.COLLAR	1					
26	2HC–23579–00	.BALL JOINT 2	1					
27	93410–42096	.CIRCLIP	1					

POWER PARTS By 4WD

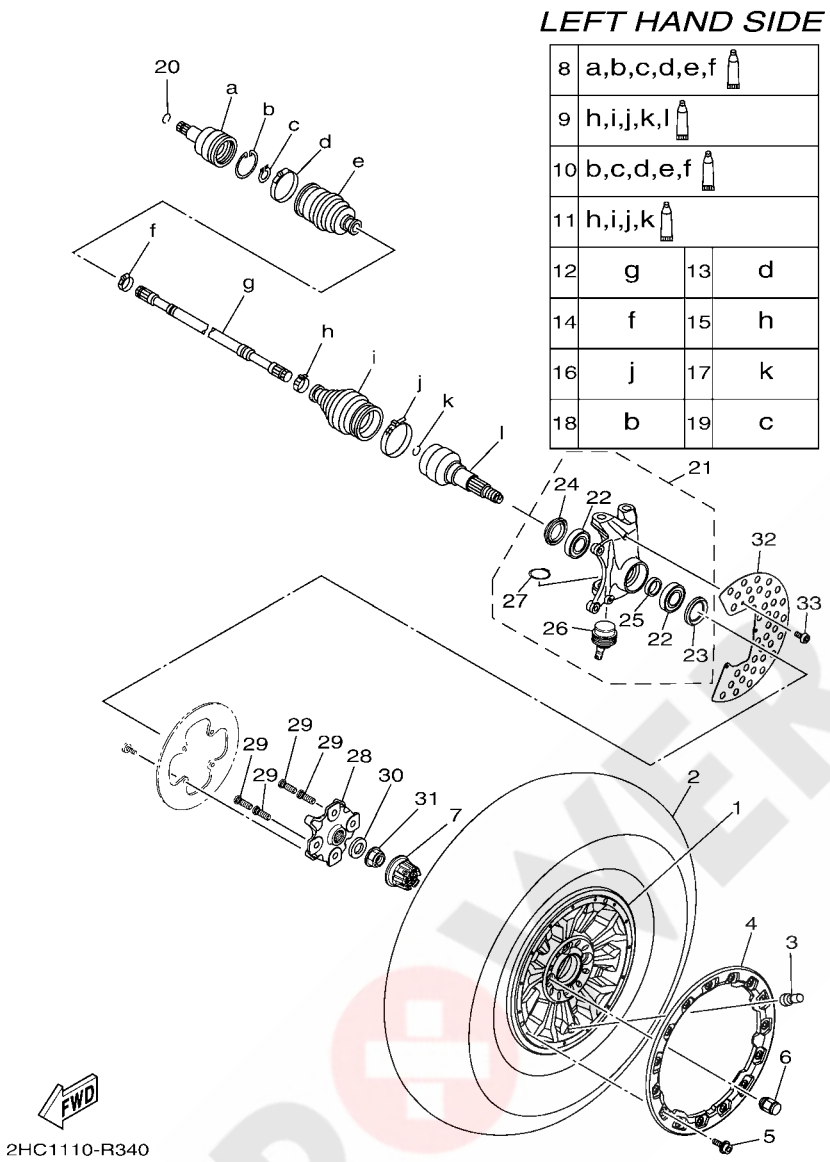

FIG. 34 FRONT WHEEL

REF. NO.	PART NO.	DESCRIPTION	USA					REMARKS
28	2HC–F5111–00	HUB, FRONT	1					
29	90114–12005	BOLT, SERRATION	4					
30	90201–25023	WASHER, PLATE	1					
31	90179–24006	NUT	1					
32	2HC–F514A–00	RING, WHEEL 1	1					
33	92012–06012	BOLT, BUTTON HEAD	3					

POWER PARTS By 4xQUAD

FIG. 35 FRONT WHEEL 2

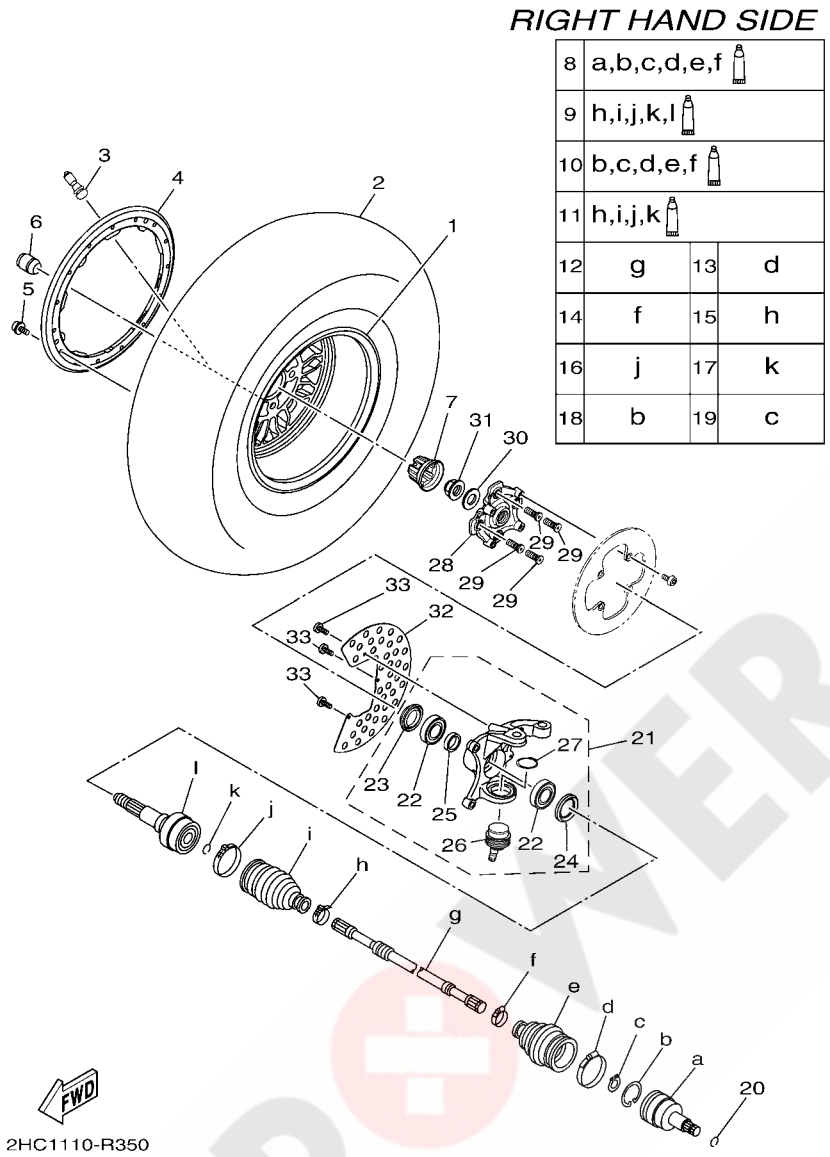

REF. NO.	PART NO.	DESCRIPTION	USA					REMARKS
1	2HC–F5168–50	CAST WHEEL, FRONT	1					
2	94109–14809	TIRE (27X9.00R14 MU09 6PR TL)	1					MAXXIS
3	93900–00813	VALVE, RIM (TR413)	1					MAXXIS
4	2HC–F4658–50	PLATE, LOCK	1					
5	90105–068C3	BOLT, FLANGE	15					
6	90176–12800	NUT, CROWN	4					
7	2HC–F512A–00	CAP, WHEEL	1					
8	2HC–2510J–00	DOUBLE OFF SET JOINT	1					
9	2HC–2510F–00	BALL JOINT SET	1					
10	2HC–2510H–00	BOOT SET(DOUBLE OFFSET JOINT)	1					
11	2HC–2510G–00	BOOT SET (BALL JOINT)	1					
12	2HC–2518E–00	SHAFT	1					
13	2HC–2511H–00	BOOT BAND(DOUBLE OFFSET JOINT)	1					
14	2HC–2511G–00	BOOT BAND(DOUBLE OFFSET JOINT)	1					
15	2HC–2510U–00	BOOT BAND (BALL JOINT)	1					
16	2HC–2512G–00	BOOT BAND (BALL JOINT)	1					
17	2HC–2512H–00	CIRCLIP	1					
18	3B4–25182–00	CIRCLIP	1					
19	3B4–2512J–00	SNAP RING	1					
20	93450–22119	CIRCLIP	1					
21	2HC–F3502–00	STEERING KNUCKLE ASSY (RIGHT)	1					
22	93306–206Y2	.BEARING	2					
23	93106–42800	.OIL SEAL	1					
24	93106–38800	.OIL SEAL	1					
25	90387–30008	.COLLAR	1					
26	2HC–23579–00	.BALL JOINT 2	1					
27	93410–42096	.CIRCLIP	1					

POWER PARTS By ATV4QUAD

FIG. 35 FRONT WHEEL 2

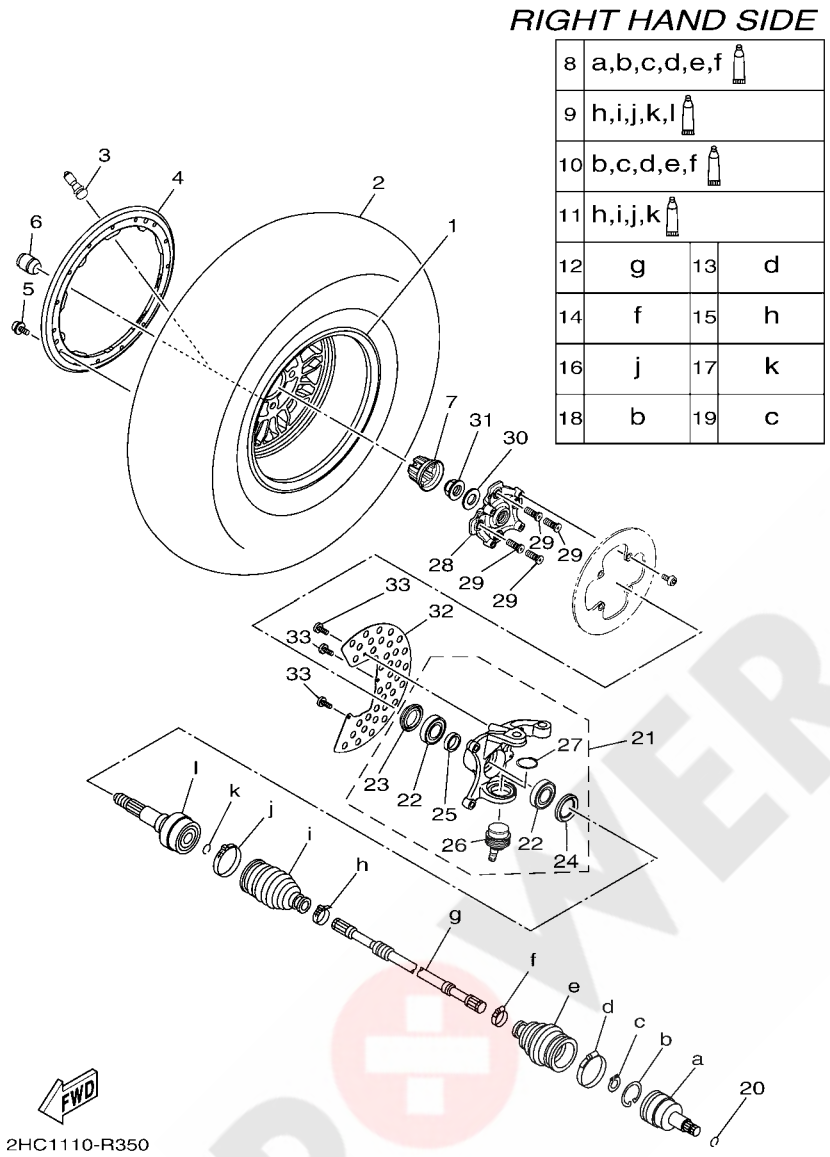

REF. NO.	PART NO.	DESCRIPTION	USA					REMARKS
28	2HC–F5111–00	HUB, FRONT	1					
29	90114–12005	BOLT, SERRATION	4					
30	90201–25023	WASHER, PLATE	1					
31	90179–24006	NUT	1					
32	2HC–F514A–00	RING, WHEEL 1	1					
33	92012–06012	BOLT, BUTTON HEAD	3					

POWER PARTS By 4xQUAD

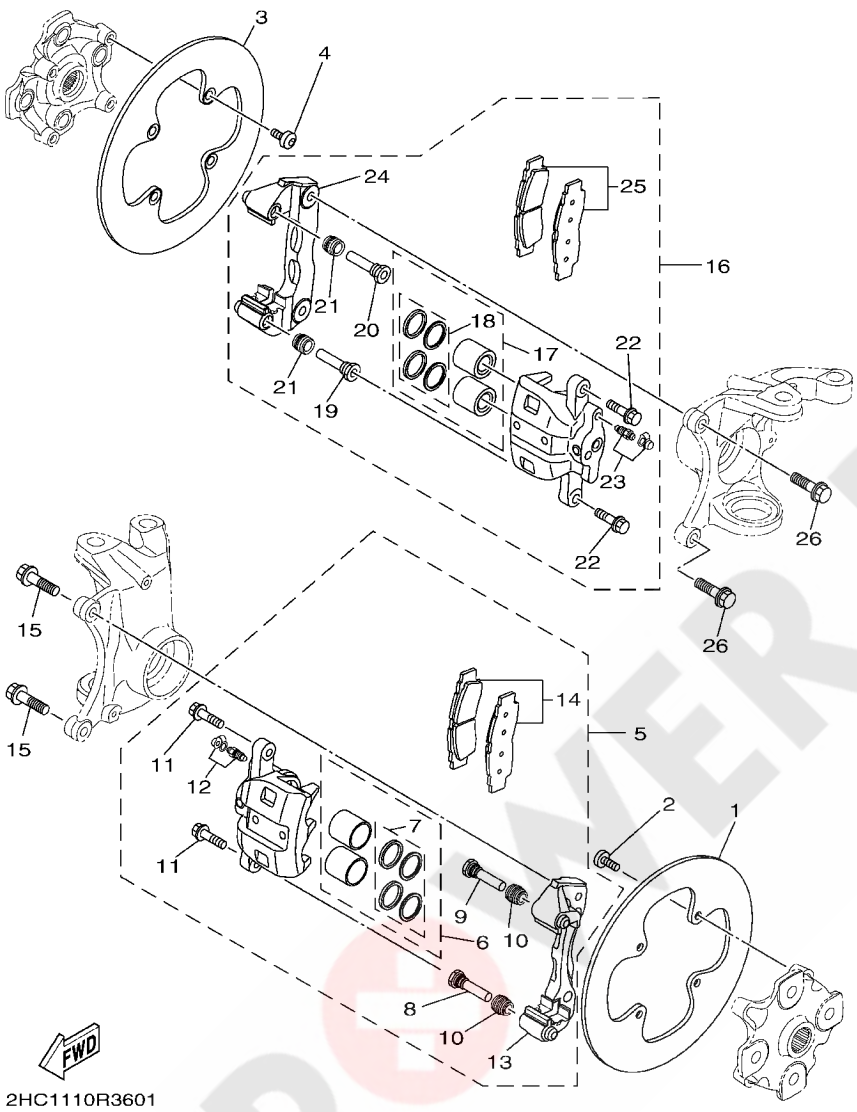

FIG. 36 FRONT BRAKE CALIPER

REF. NO.	PART NO.	DESCRIPTION	USA					REMARKS
1	2HC–F582T–00	DISC, BRAKE (LEFT)	1					
2	90109–08076	BOLT	4					
3	2HC–F582T–00	DISC, BRAKE (LEFT)	1					
4	90109–08076	BOLT	4					
5	2HC–2580T–00	CALIPER ASSY (LEFT)	1					
6	1XD–25802–00	.PISTON ASSY, CALIPER	1					
7	1XD–25803–00	..CALIPER SEAL KIT	1					
8	2HC–25926–00	.BOLT	1					
9	2HC–25926–10	.BOLT	1					
10	2HC–25917–00	.BOOT, CALIPER	2					
11	2HC–25833–00	.BOLT, FITTING	2					
12	1UY–W0048–50	.BLEED SCREW KIT	1					
13	2HC–25819–00	.BRACKET, CALIPER	1					WITH SUPPORT PAD
14	2HC–25805–00	.BRAKE PAD KIT	1					
15	90105–10405	BOLT, FLANGE	2					
16	2HC–2580U–00	CALIPER ASSY (RIGHT)	1					
17	1XD–25802–00	.PISTON ASSY, CALIPER	1					
18	1XD–25803–00	..CALIPER SEAL KIT	1					
19	2HC–25926–00	.BOLT	1					
20	2HC–25926–10	.BOLT	1					
21	2HC–25917–00	.BOOT, CALIPER	2					
22	2HC–25833–00	.BOLT, FITTING	2					
23	1UY–W0048–50	.BLEED SCREW KIT	1					
24	2HC–25819–00	.BRACKET, CALIPER	1					WITH SUPPORT PAD
25	2HC–25805–00	.BRAKE PAD KIT	1					
26	90105–10405	BOLT, FLANGE	2					

POWER PARTS By ATVQUAD

FIG. 37 REAR WHEEL

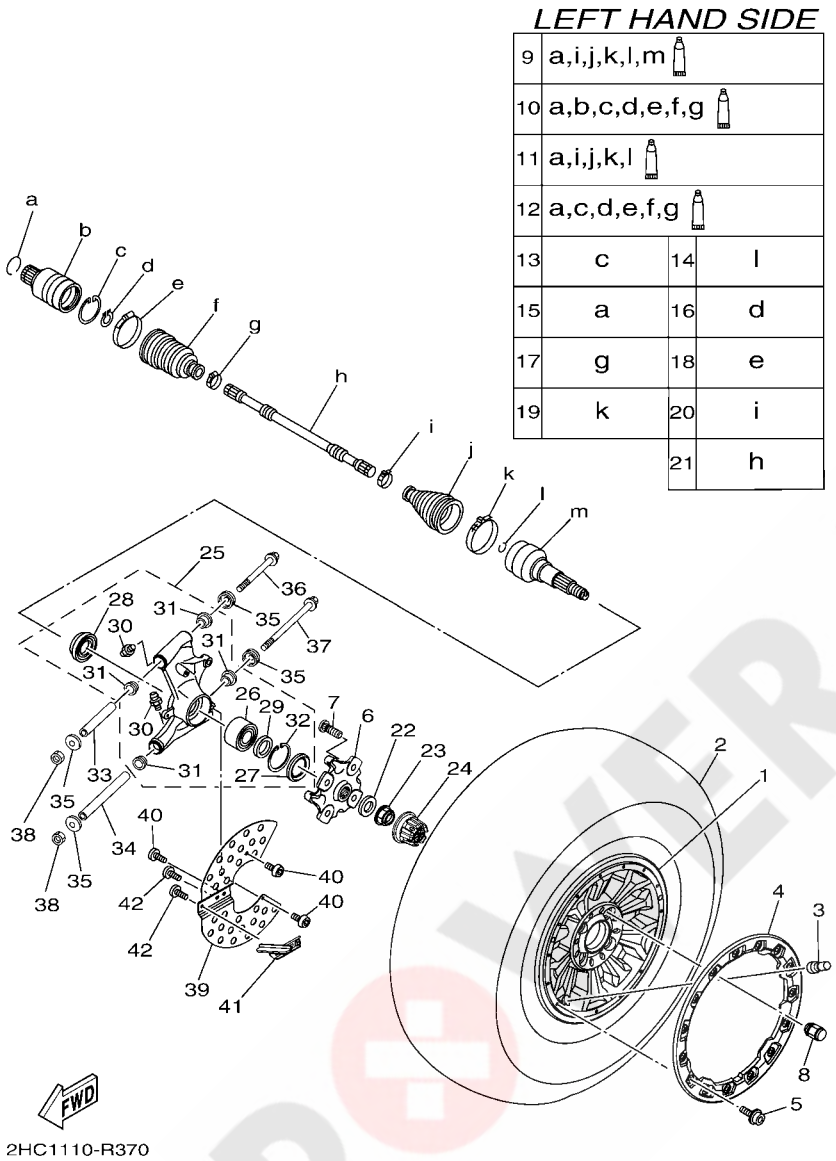

REF. NO.	PART NO.	DESCRIPTION	USA					REMARKS
1	2HC–F5307–50	CAST WHEEL, REAR	1					
2	94111–14802	TIRE (27X11.00R14 MU10 6PR TL)	1					MAXXIS
3	93900–00813	VALVE, RIM (TR413)	1					MAXXIS
4	2HC–F4658–50	PLATE, LOCK	1					
5	90105–068C3	BOLT, FLANGE	15					
6	2HC–F5111–00	HUB, FRONT	1					
7	90114–12005	BOLT, SERRATION	4					
8	90176–12800	NUT, CROWN	4					
9	2HC–2530T–00	BALL JOINT SET	1					
10	2HC–2530V–00	DOUBLE OFF SET JOINT	1					
11	2HC–2530X–00	BOOT SET (BALL JOINT)	1					
12	2HC–2530Y–00	BOOT SET(DOUBLE OFFSET JOINT)	1					
13	2HC–2536E–00	CLIP, SPRING	1					
14	16B–25185–00	RING 1	1					
15	16B–2536E–00	CLIP, SPRING	1					
16	2HC–2512J–00	SNAP RING	1					
17	2HC–25719–00	BAND	1					
18	2HC–26293–00	BAND	1					
19	2HC–2512G–00	BOOT BAND (BALL JOINT)	1					
20	2HC–26397–00	BAND	1					
21	2HC–259A2–00	SHAFT	1					
22	90201–25023	WASHER, PLATE	1					
23	90179–24006	NUT	1					
24	2HC–F512A–00	CAP, WHEEL	1					
25	2HC–F530F–02	REAR KNUCKLE ASSY	1					
26	93305–00603	.BEARING	1					
27	93106–42801	.OIL SEAL	1					

POWER PARTS BY ATV QUAD

FIG. 37 REAR WHEEL

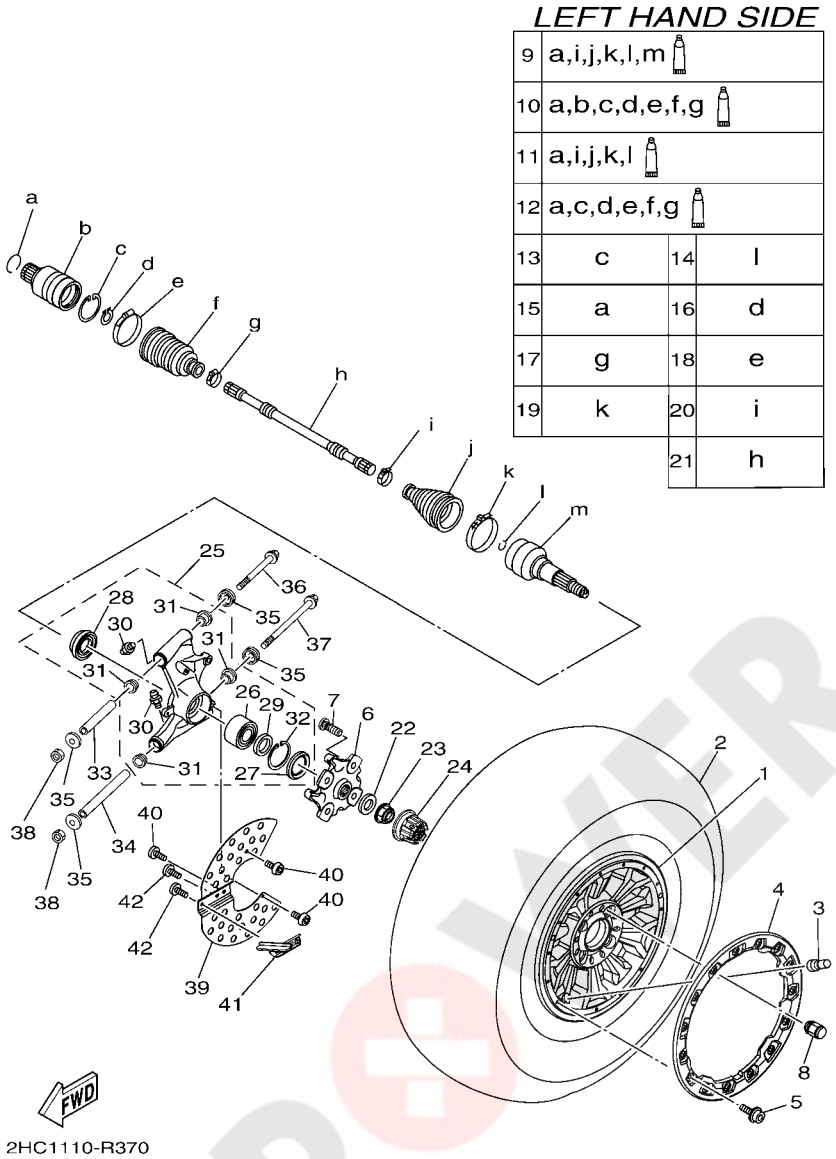

REF. NO.	PART NO.	DESCRIPTION	USA					REMARKS
28	93106–38800	.OIL SEAL	1					
29	90387–30013	.COLLAR	1					
30	93700–06004	.NIPPLE, GREASE	2					
31	90381–17067	.BUSH, SOLID	4					
32	99009–72500	.CIRCLIP	1					
33	90387–12060	COLLAR	1					
34	90387–12061	COLLAR	1					
35	1XD–23517–00	COVER, THRUST 1	4					
36	90105–12066	BOLT, FLANGE	1					
37	90105–12097	BOLT, FLANGE	1					
38	90185–12007	NUT, SELF-LOCKING	2					
39	2HC–F534C–00	RING, WHEEL RR. 1	1					
40	90111–06096	BOLT,HEX. SOCKET BUTTON	3					
41	2HC–F2341–00	PLATE, GUIDE 1	1					
42	92012–06012	BOLT, BUTTON HEAD	2					

POWER PARTS By 4xQUAD

FIG. 38 REAR WHEEL 2

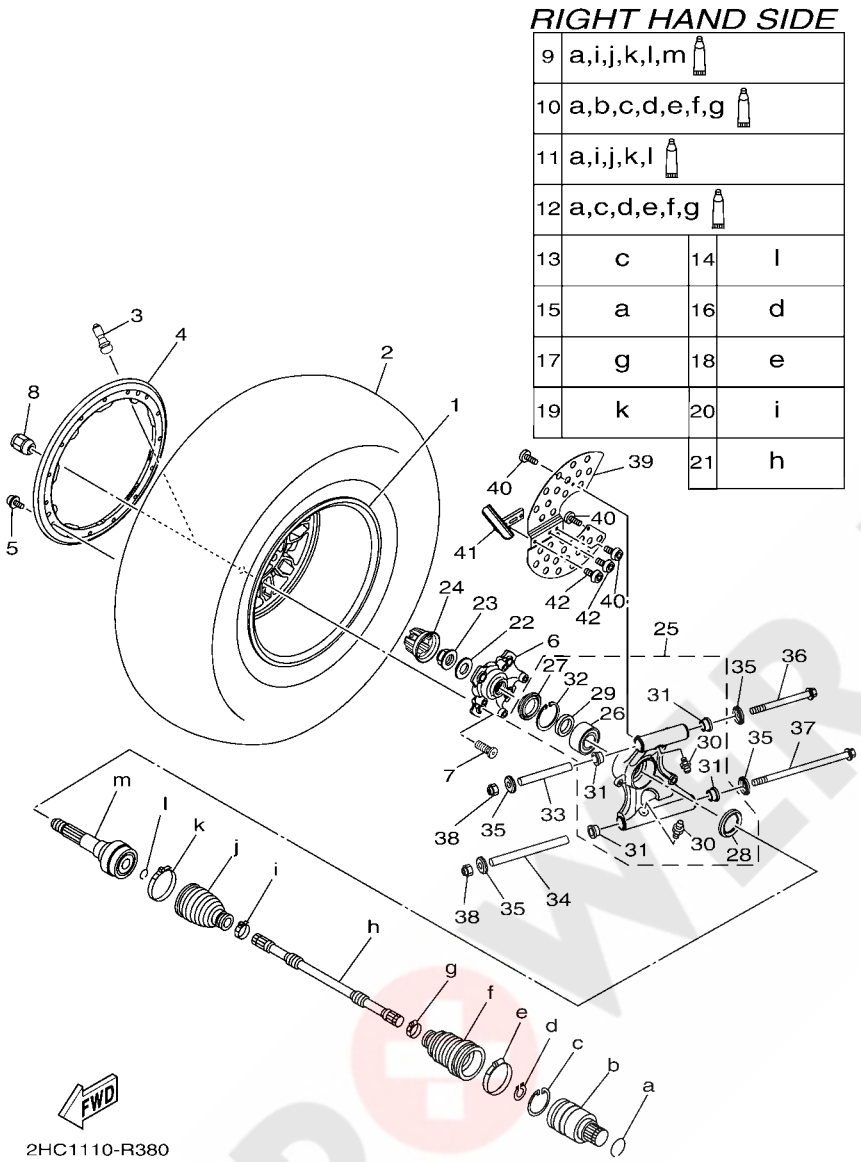

REF. NO.	PART NO.	DESCRIPTION	USA					REMARKS
1	2HC–F5307–50	CAST WHEEL, REAR	1					
2	94111–14802	TIRE (27X11.00R14 MU10 6PR TL)	1					MAXXIS
3	93900–00813	VALVE, RIM (TR413)	1					MAXXIS
4	2HC–F4658–50	PLATE, LOCK	1					
5	90105–068C3	BOLT, FLANGE	15					
6	2HC–F5111–00	HUB, FRONT	1					
7	90114–12005	BOLT, SERRATION	4					
8	90176–12800	NUT, CROWN	4					
9	2HC–2530T–00	BALL JOINT SET	1					
10	2HC–2530V–00	DOUBLE OFF SET JOINT	1					
11	2HC–2530X–00	BOOT SET (BALL JOINT)	1					
12	2HC–2530Y–00	BOOT SET(DOUBLE OFFSET JOINT)	1					
13	2HC–2536E–00	CLIP, SPRING	1					
14	16B–25185–00	RING 1	1					
15	16B–2536E–00	CLIP, SPRING	1					
16	2HC–2512J–00	SNAP RING	1					
17	2HC–25719–00	BAND	1					
18	2HC–26293–00	BAND	1					
19	2HC–2512G–00	BOOT BAND (BALL JOINT)	1					
20	2HC–26397–00	BAND	1					
21	2HC–259A2–00	SHAFT	1					
22	90201–25023	WASHER, PLATE	1					
23	90179–24006	NUT	1					
24	2HC–F512A–00	CAP, WHEEL	1					
25	2HC–F532F–02	REAR KNUCKLE ASSY.,2	1					
26	93305–00603	.BEARING	1					
27	93106–42801	.OIL SEAL	1					

POWER PARTS By 4WD

FIG. 38 REAR WHEEL 2

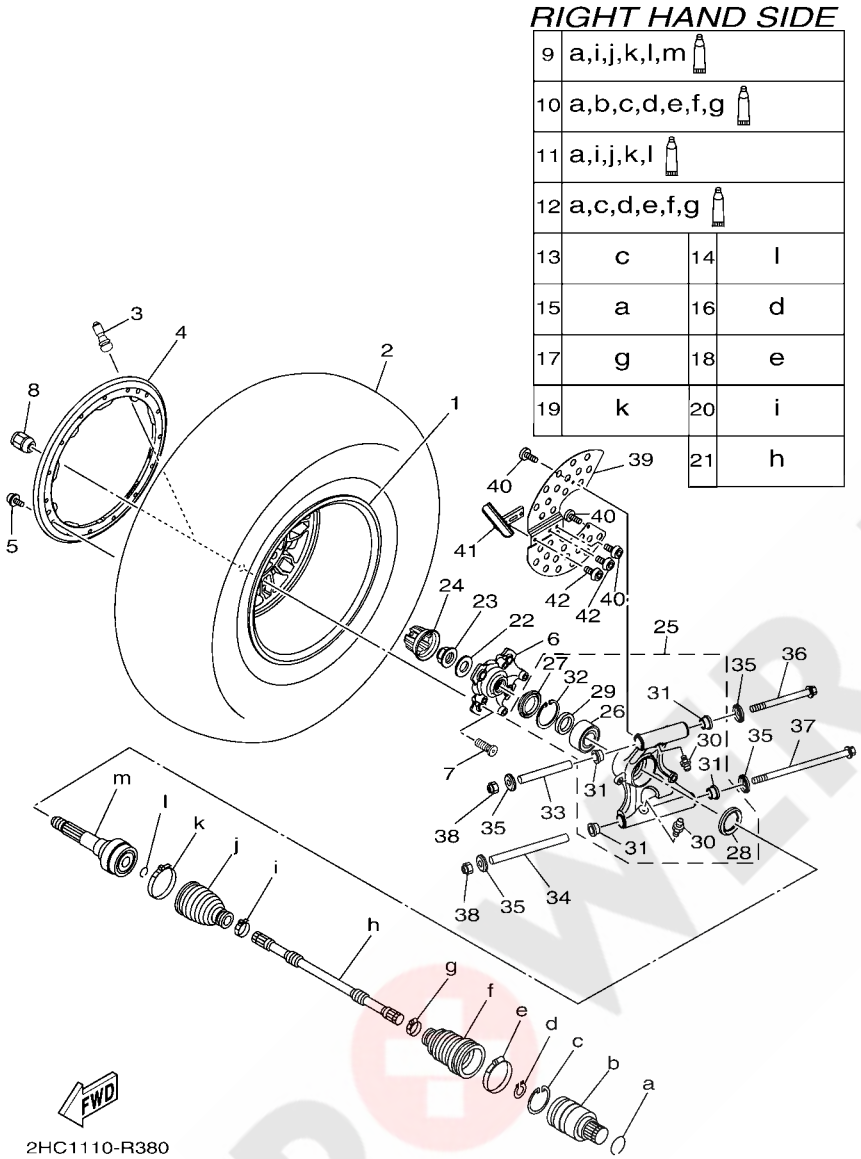

REF. NO.	PART NO.	DESCRIPTION	USA					REMARKS
28	93106–38800	.OIL SEAL	1					
29	90387–30013	.COLLAR	1					
30	93700–06004	.NIPPLE, GREASE	2					
31	90381–17067	.BUSH, SOLID	4					
32	99009–72500	.CIRCLIP	1					
33	90387–12060	COLLAR	1					
34	90387–12061	COLLAR	1					
35	1XD–23517–00	COVER, THRUST 1	4					
36	90105–12066	BOLT, FLANGE	1					
37	90105–12097	BOLT, FLANGE	1					
38	90185–12007	NUT, SELF-LOCKING	2					
39	2HC–F535C–00	RING, WHEEL RR. 2	1					
40	90111–06096	BOLT,HEX. SOCKET BUTTON	3					
41	2HC–F2342–00	PLATE, GUIDE 2	1					
42	92012–06012	BOLT, BUTTON HEAD	2					

POWER PARTS By 4x4QUAD

FIG. 39 REAR BRAKE CALIPER

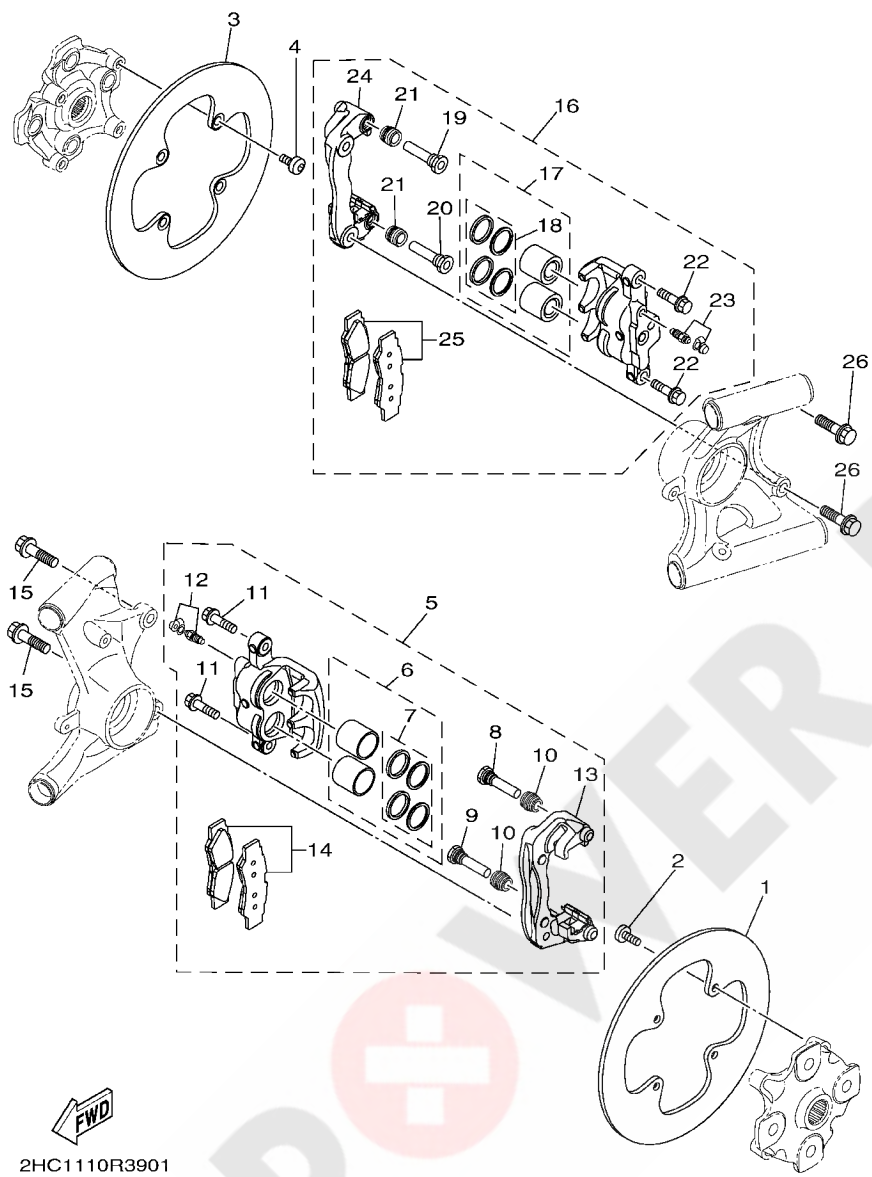

REF. NO.	PART NO.	DESCRIPTION	USA					REMARKS
1	2HC–F582T–00	DISC, BRAKE (LEFT)	1					
2	90109–08076	BOLT	4					
3	2HC–F582T–00	DISC, BRAKE (LEFT)	1					
4	90109–08076	BOLT	4					
5	2HC–2580V–00	CALIPER ASSY, REAR 1	1					
6	3LD–25802–00	.PISTON ASSY, CALIPER	1					
7	3JD–25803–00	..CALIPER SEAL KIT	1					
8	2HC–25926–00	.BOLT	1					
9	2HC–25926–10	.BOLT	1					
10	2HC–25917–00	.BOOT, CALIPER	2					
11	2HC–25833–00	.BOLT, FITTING	2					
12	1UY–W0048–50	.BLEED SCREW KIT	1					
13	2HC–25921–00	.BRACKET, SUPPORT	1					WITH SUPPORT PAD
14	2HC–25806–00	.BRAKE PAD KIT 2	1					
15	90105–10405	BOLT, FLANGE	2					
16	2HC–2580W–00	CALIPER ASSY, REAR 2	1					
17	3LD–25802–00	.PISTON ASSY, CALIPER	1					
18	3JD–25803–00	..CALIPER SEAL KIT	1					
19	2HC–25926–00	.BOLT	1					
20	2HC–25926–10	.BOLT	1					
21	2HC–25917–00	.BOOT, CALIPER	2					
22	2HC–25833–00	.BOLT, FITTING	2					
23	1UY–W0048–50	.BLEED SCREW KIT	1					
24	2HC–25921–00	.BRACKET, SUPPORT	1					WITH SUPPORT PAD
25	2HC–25806–00	.BRAKE PAD KIT 2	1					
26	90105–10405	BOLT, FLANGE	2					

POWER PARTS By SQUAD

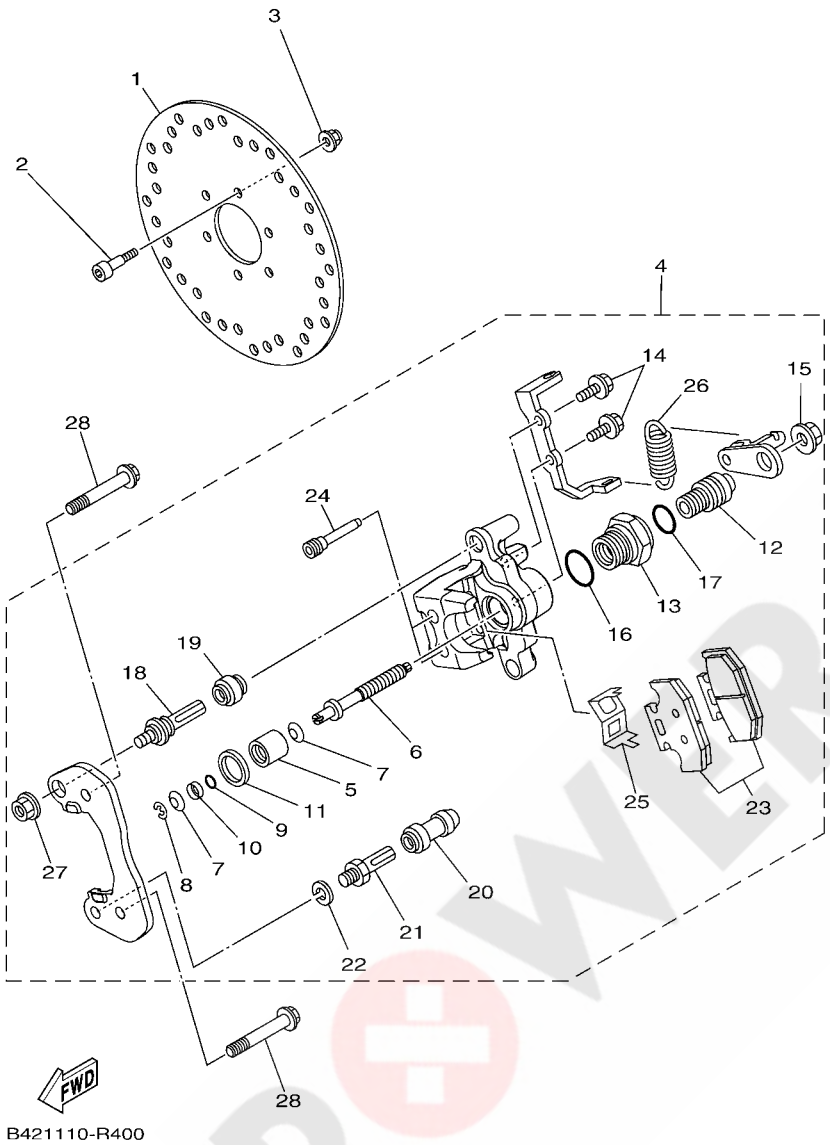

FIG. 40 REAR BRAKE CALIPER 2

REF. NO.	PART NO.	DESCRIPTION	USA					REMARKS
1	1XD–F5711–01	DISC, BRAKE	1					
2	90110–06228	BOLT, HEXAGON SOCKET HEAD	6					
3	95602–06200	NUT, SELF-LOCKING	6					
4	1XD–25905–00	PARKING BRAKE ASSY	1					
5	5B4–25814–10	.PISTON, CALIPER	1					
6	5B4–25880–00	.PUSH ROD COMP.	1					
7	5B4–2581R–00	.WASHER, CONICAL SPRING	2					
8	5B4–25415–00	.CIRCLIP	1					
9	5B4–25976–00	.O-RING	1					
10	5B4–25913–00	.RETAINER	1					
11	5B4–25975–00	.RUBBER, BUSHING	1					
12	5B4–25978–00	.SHAFT L	1					
13	5B4–25973–00	.NUT	1					
14	5B4–25833–00	.BOLT, FITTING	2					
15	1UY–25973–51	.NUT	1					
16	5B4–25976–10	.O-RING	1					
17	5B4–25976–20	.O-RING	1					
18	3JD–25926–00	.BOLT	1					
19	3JD–25917–00	.BOOT, CALIPER	1					
20	1UY–25937–51	.BOOT 2	1					
21	1UY–25926–51	.BOLT	1					
22	1UY–25938–51	.WASHER, SPRING	1					
23	5B4–25806–00	.BRAKE PAD KIT 2	1					
24	5B4–25924–00	.PIN, PAD	2					
25	5B4–25919–00	.SUPPORT, PAD	1					
26	5B4–25977–00	.SPRING, RETURN	1					
27	5B4–2585F–00	.NUT	1					

POWER PARTS By 4WDUAD

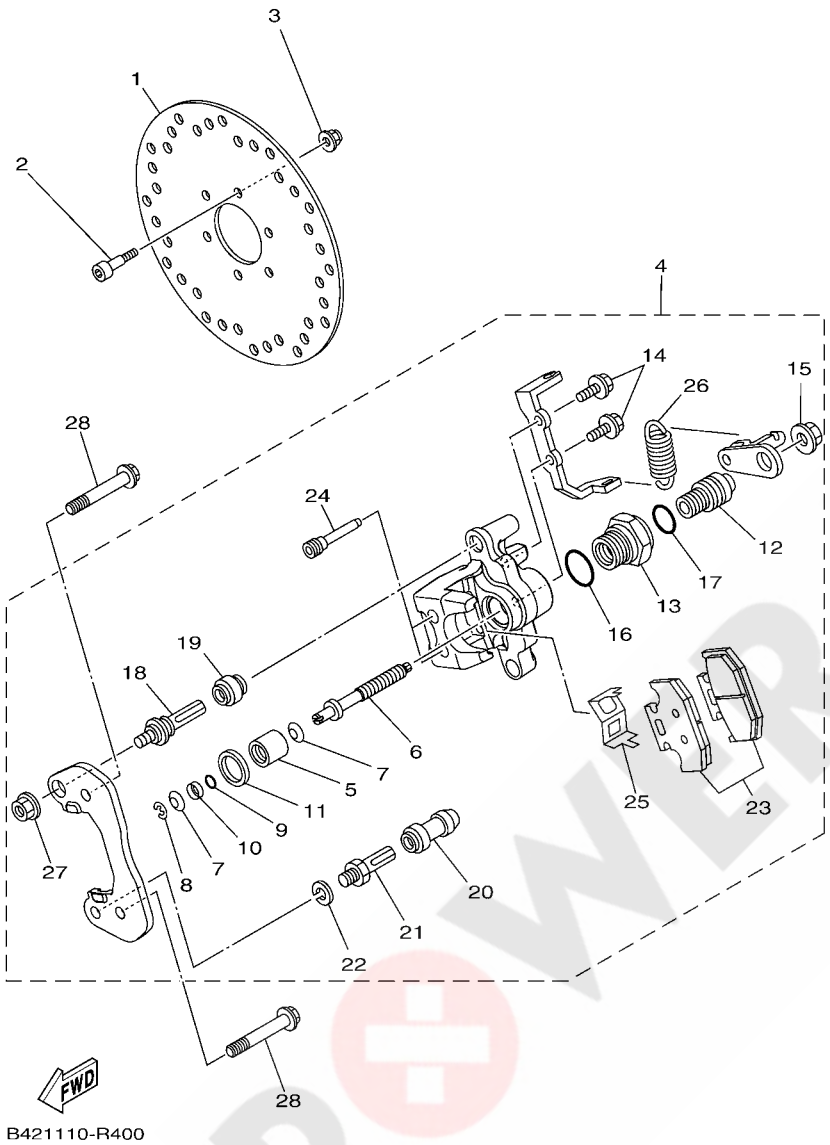

FIG. 40 REAR BRAKE CALIPER 2

REF. NO.	PART NO.	DESCRIPTION	USA					REMARKS
28	90105–10295	BOLT, FLANGE	2					

POWER PARTS By 4xQUAD

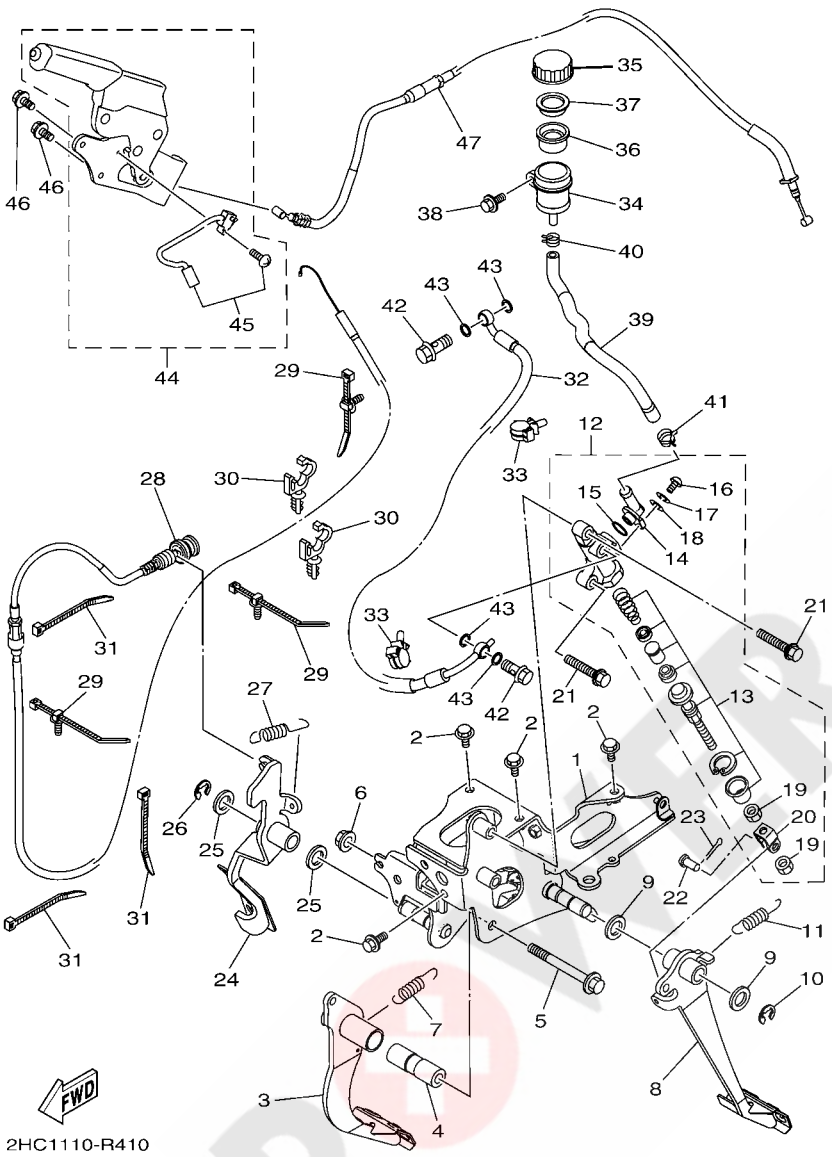

FIG. 41 PEDAL WIRE

REF. NO.	PART NO.	DESCRIPTION	USA					REMARKS
1	2HC–F2548–00	BRACKET, PEDAL SUPPORT	1					
2	95812–08016	BOLT, FLANGE	4					
3	2HC–F7200–00	PEDAL, BRAKE	1					
4	90387–10843	COLLAR	1					
5	95812–10090	BOLT, FLANGE	1					
6	95602–10200	NUT, U FLANGE	1					
7	90506–20192	SPRING, TENSION	1					
8	2HC–E8110–00	SHIFT PEDAL ASSY	1					
9	90201–15018	WASHER, PLATE	2					
10	93430–12008	CIRCLIP	1					
11	90506–20192	SPRING, TENSION	1					
12	2HC–26450–00	MASTER CYLINDER ASSY (CLUTCH)	1					
13	2HC–W0042–50	.CYLINDER KIT, MASTER	1					
14	1AE–2582A–00	.JOINT	1					
15	93210–15620	.O-RING	1					
16	98502–04012	.SCREW, PAN HEAD	1					
17	92902–04100	.WASHER, SPRING	1					
18	92902–04600	.WASHER, PLATE	1					
19	4SS–27218–00	.NUT	2					
20	2YK–27222–00	.JOINT	1					
21	95812–08050	BOLT, FLANGE	2					
22	90240–08005	PIN, CLEVIS	1					
23	91401–20020	PIN, COTTER	1					
24	2HC–F7801–01	ACCEL PEDAL ASSY	1					
25	90201–15018	WASHER, PLATE	2					
26	93430–12008	CIRCLIP	1					
27	90506–20192	SPRING, TENSION	1					

POWER PARTS By ATQUAD

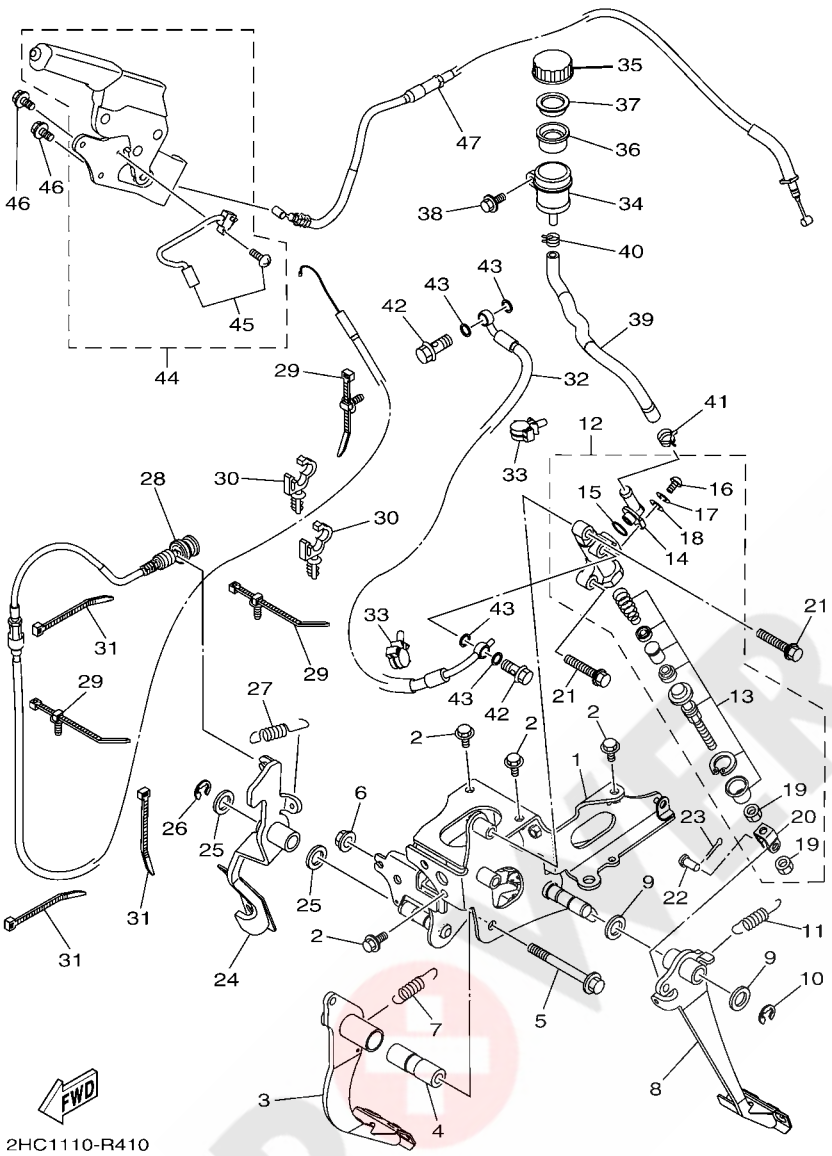

FIG. 41 PEDAL WIRE

REF. NO.	PART NO.	DESCRIPTION	USA					REMARKS
28	2HC–26311–00	CABLE, THROTTLE 1	1					
29	5B4–F1338–00	CLAMP	3					
30	90464–12830	CLAMP	2					d: 12mm
31	90464–48800	CLAMP	3					
32	2HC–F6472–00	HOSE, CLUTCH 1	1					
33	90464–16012	CLAMP	2					
34	5JJ–25894–01	TANK, RESERVOIR	1					
35	3XP–25852–50	CAP, RESERVOIR	1					
36	2VN–25854–00	DIAPHRAGM, RESERVOIR	1					
37	2VN–25855–00	BUSH,DIAPHRAGM	1					
38	90119–06137	BOLT, WITH WASHER	1					
39	2HC–F5895–00	HOSE, RESERVOIR	1					
40	90467–11044	CLIP	1					
41	90467–14057	CLIP	1					
42	90401–10015	BOLT, UNION	2					
43	90201–10118	WASHER, PLATE	4					
44	1XD–F5690–00	PARKING LEVER ASSY	1					
45	5UG–H251S–00	.SWITCH COMP.	1					
46	95812–06012	BOLT, FLANGE	2					
47	2HC–26341–00	WIRE, BRAKE 1	1					

POWER PARTS By ATVQUAD

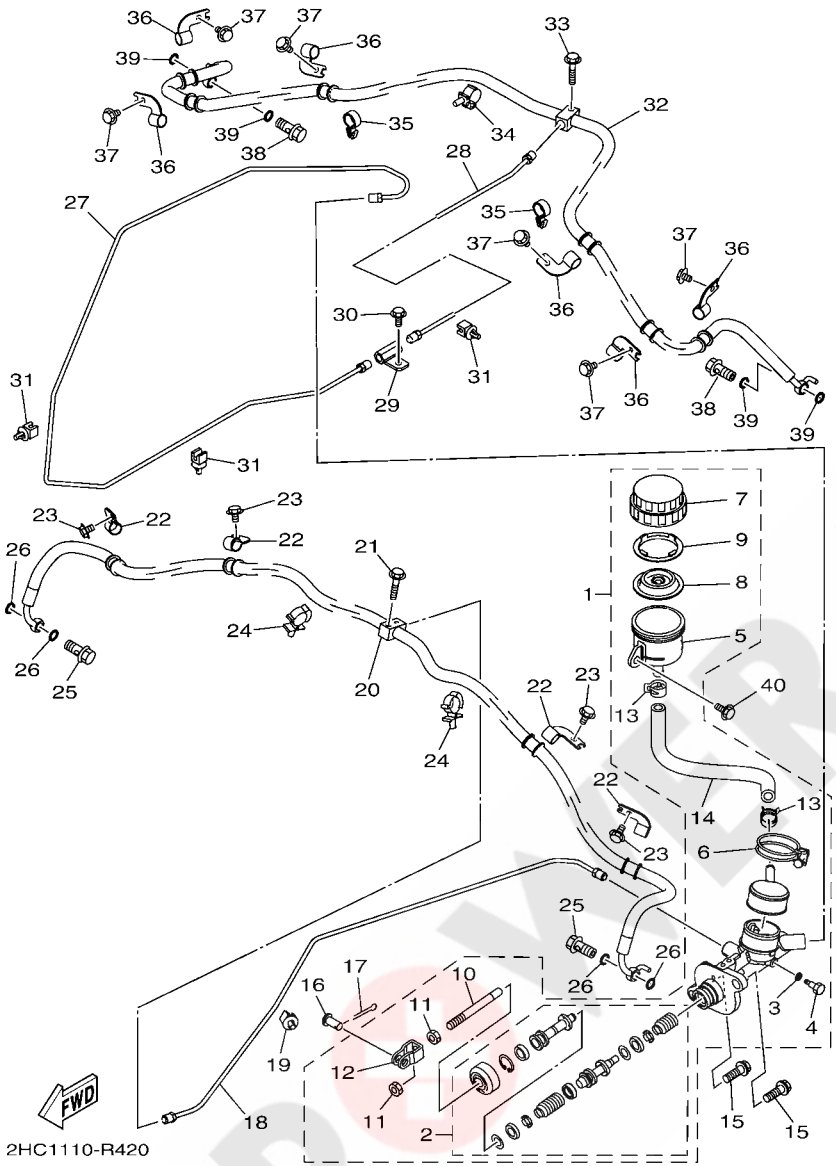

FIG. 42 MASTER CYLINDER

REF. NO.	PART NO.	DESCRIPTION	USA					REMARKS
1	2HC–2583T–00	MASTER CYLINDER ASSY	1					
2	5UG–25808–00	.CYLINDER KIT, MASTER	1					
3	5UG–25878–00	.WASHER, OIL BOLT	1					
4	5UG–25877–00	.BOLT, OIL 1	1					
5	2HC–25894–00	.TANK, RESERVOIR	1					
6	5UG–25719–00	.BAND	1					
7	5UG–25852–00	.CAP, RESERVOIR	1					
8	5UG–25854–00	.DIAPHRAGM, RESERVOIR	1					
9	5UG–25855–00	.BUSH,DIAPHRAGM	1					
10	5UG–25880–00	.PUSH ROD COMP.	1					
11	4SS–27218–00	.NUT	2					
12	2YK–27222–00	.JOINT	1					
13	2HC–24519–00	.CLIP	2					
14	2HC–2589E–00	.HOSE	1					
15	90105–08129	BOLT, FLANGE	2					
16	90240–08005	PIN, CLEVIS	1					
17	91402–20020	PIN, COTTER	1					
18	2HC–F5882–00	PIPE, BRAKE 2	1					
19	2HC–81677–00	CLAMP 1	1					
20	2HC–F5872–01	HOSE, BRAKE 1	1					
21	90105–06833	BOLT, FLANGE	1					
22	3B4–25876–10	HOLDER, BRAKE HOSE 2	4					
23	95812–06010	BOLT, FLANGE	4					
24	90464–18011	CLAMP	2					
25	90401–10015	BOLT, UNION	2					
26	90201–10118	WASHER, PLATE	4					
27	2HC–F5871–00	PIPE, BRAKE	1					

POWER PARTS By KOUAD

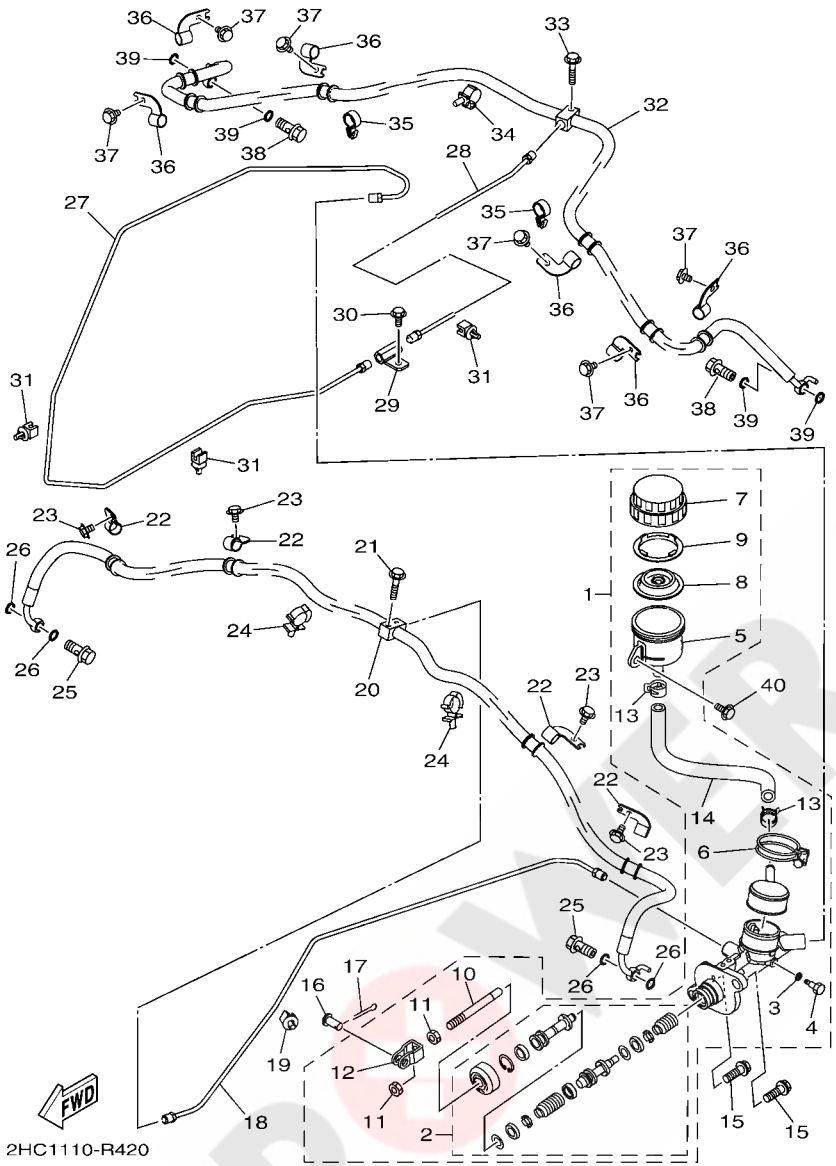

FIG. 42 MASTER CYLINDER

REF. NO.	PART NO.	DESCRIPTION	USA					REMARKS
28	2HC–F5883–00	PIPE, BRAKE 3	1					
29	JX2–25885–11	JOINT	1					
30	90105–06831	BOLT, FLANGE	1					
31	2HC–81677–00	CLAMP 1	7					
32	2HC–F5873–01	HOSE, BRAKE 2	1					
33	90105–06833	BOLT, FLANGE	1					
34	90464–16012	CLAMP	1					
35	90464–19815	CLAMP	2					
36	3B4–25876–10	HOLDER, BRAKE HOSE 2	6					
37	95812–06010	BOLT, FLANGE	6					
38	90401–10015	BOLT, UNION	2					
39	90201–10118	WASHER, PLATE	4					
40	90119–06137	BOLT, WITH WASHER	1					

POWER PARTS By axQUAD

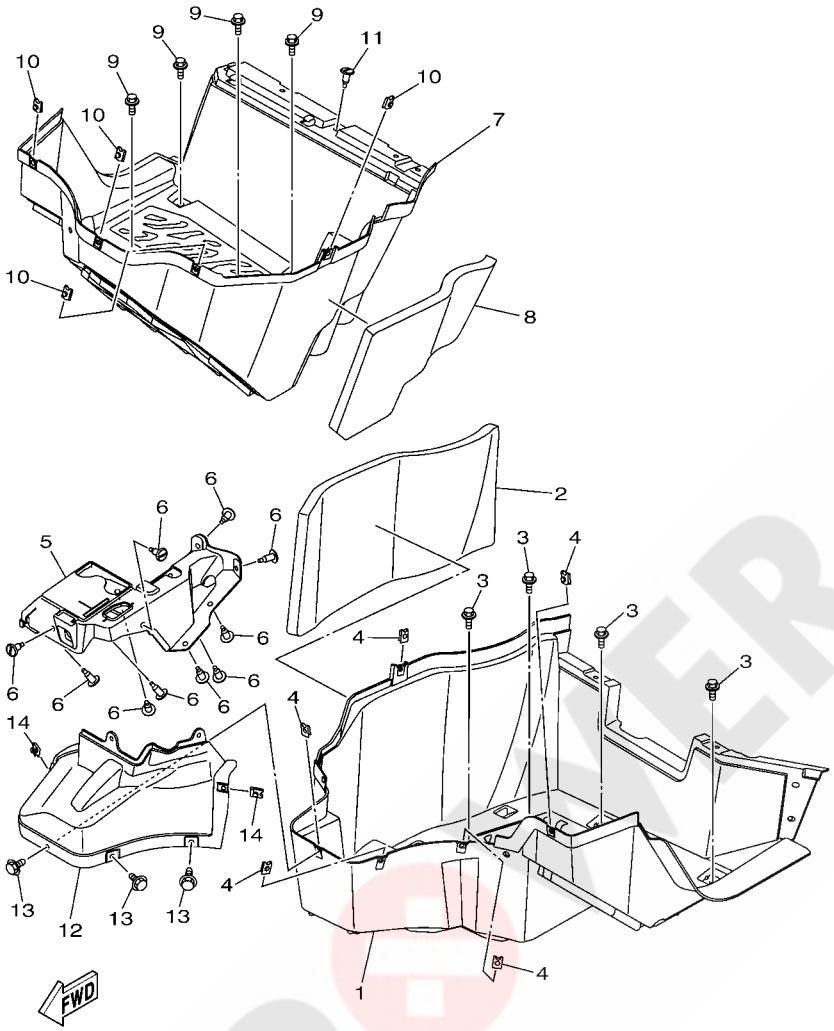

FIG. 43 STAND & FOOTREST

REF. NO.	PART NO.	DESCRIPTION	USA					REMARKS
1	2HC–F7411–00	FOOTREST 1	1					
2	2HC–2174A–00	INSULATOR, SIDE COVER	1					
3	JW1–K6179–01	BOLT, SPECIAL 1	4					
4	90183–060A6	NUT, SPRING	5					
5	2HC–F7286–00	COVER, DUST	1					
6	90269–07803	RIVET	10					
7	2HC–F7421–00	FOOTREST 2	1					
8	2HC–2174S–00	INSULATOR 5	1					
9	JW1–K6179–01	BOLT, SPECIAL 1	4					
10	90183–060A6	NUT, SPRING	4					
11	90269–07803	RIVET	1					
12	2HC–F7854–00	COVER, PEDAL	1					
13	90119–06226	BOLT, WITH WASHER	3					
14	90183–060A6	NUT, SPRING	2					

POWER PARTS By ATVQUAD

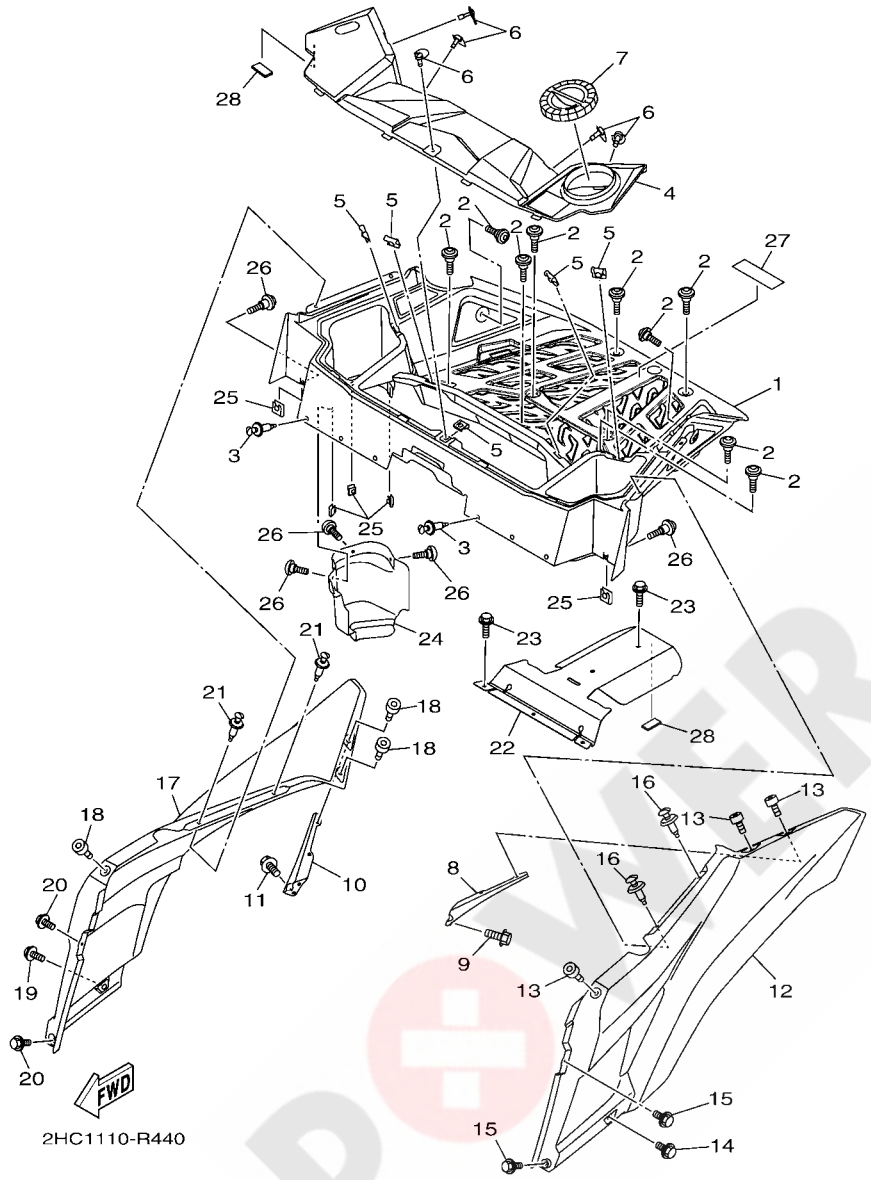

FIG. 44 CARRIER

REF. NO.	PART NO.	DESCRIPTION	USA					REMARKS
1	2HC–F4841–00	CARRIER, FRONT	1					
2	90109–068A5	BOLT	9					
3	90269–07803	RIVET	6					
4	2HC–F172W–00	COVER	1					
5	4XV–2177L–01	PLATE, SPRING	5					
6	8HG–28386–00	HEAD	5					
7	1XP–F151B–00	CAP	1					
8	2HC–F1643–00	STAY, REAR	1					
9	95812–06012	BOLT, FLANGE	2					
10	2HC–F1644–00	STAY, REAR	1					
11	95812–06012	BOLT, FLANGE	2					
12	2HC–K8193–01	PANEL, REAR FENDER 3	1					
13	90110–06200	BOLT, HEXAGON SOCKET HEAD	3					
14	90109–06307	BOLT	1					
15	90119–06226	BOLT, WITH WASHER	2					
16	90269–07803	RIVET	2					
17	2HC–K8194–01	PANEL, REAR FENDER 4	1					
18	90110–06200	BOLT, HEXAGON SOCKET HEAD	3					
19	90109–06307	BOLT	1					
20	90119–06226	BOLT, WITH WASHER	2					
21	90269–07803	RIVET	2					
22	2HC–F2898–00	INSULATOR, HEAT	1					
23	95812–08016	BOLT, FLANGE	5					
24	2HC–F842M–00	COVER 1	1					
25	90183–060A6	NUT, SPRING	5					
26	90119–06226	BOLT, WITH WASHER	5					
27	F1K–U8221–00	PAD, BATTERY	1					

POWER PARTS By 4xQUAD

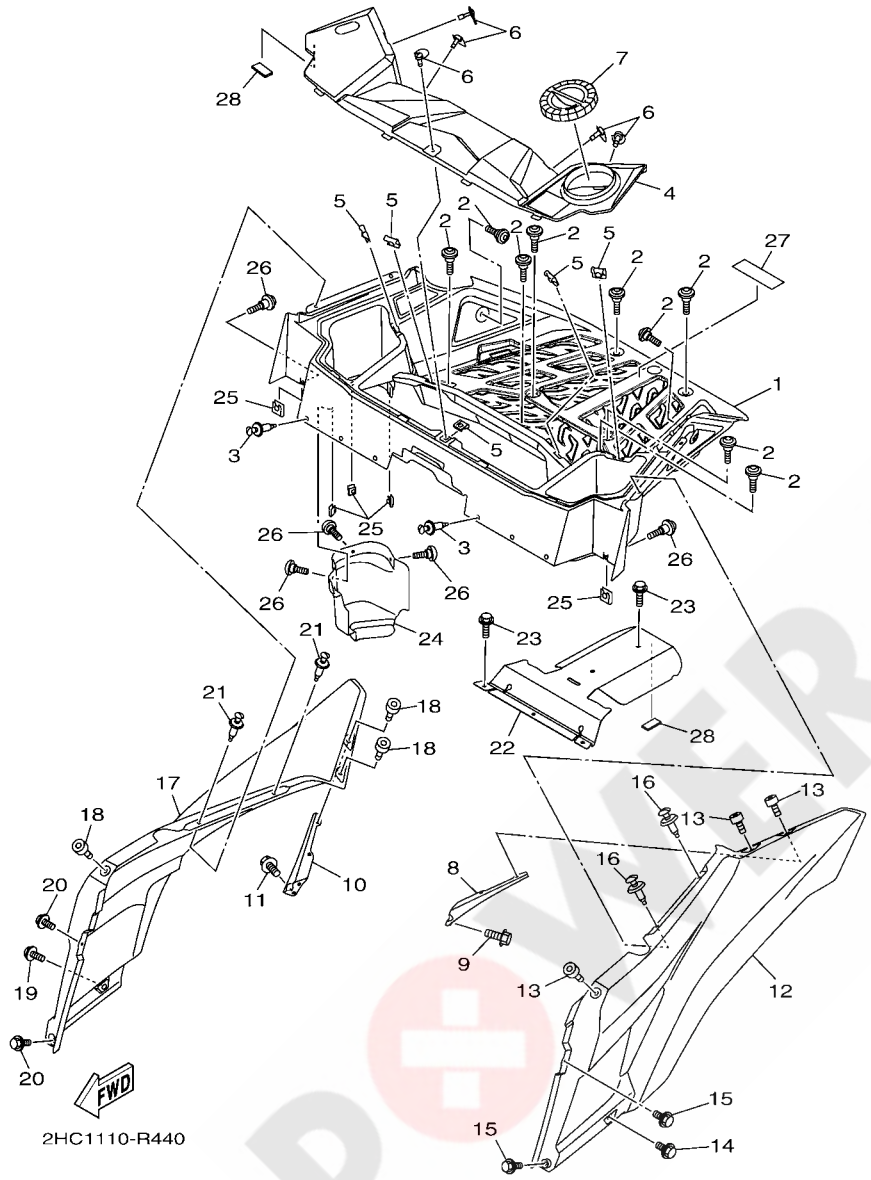

FIG. 44 CARRIER

REF. NO.	PART NO.	DESCRIPTION	USA					REMARKS
28	5UG–K7588–00	DAMPER	2					

POWER PARTS By 4xQUAD

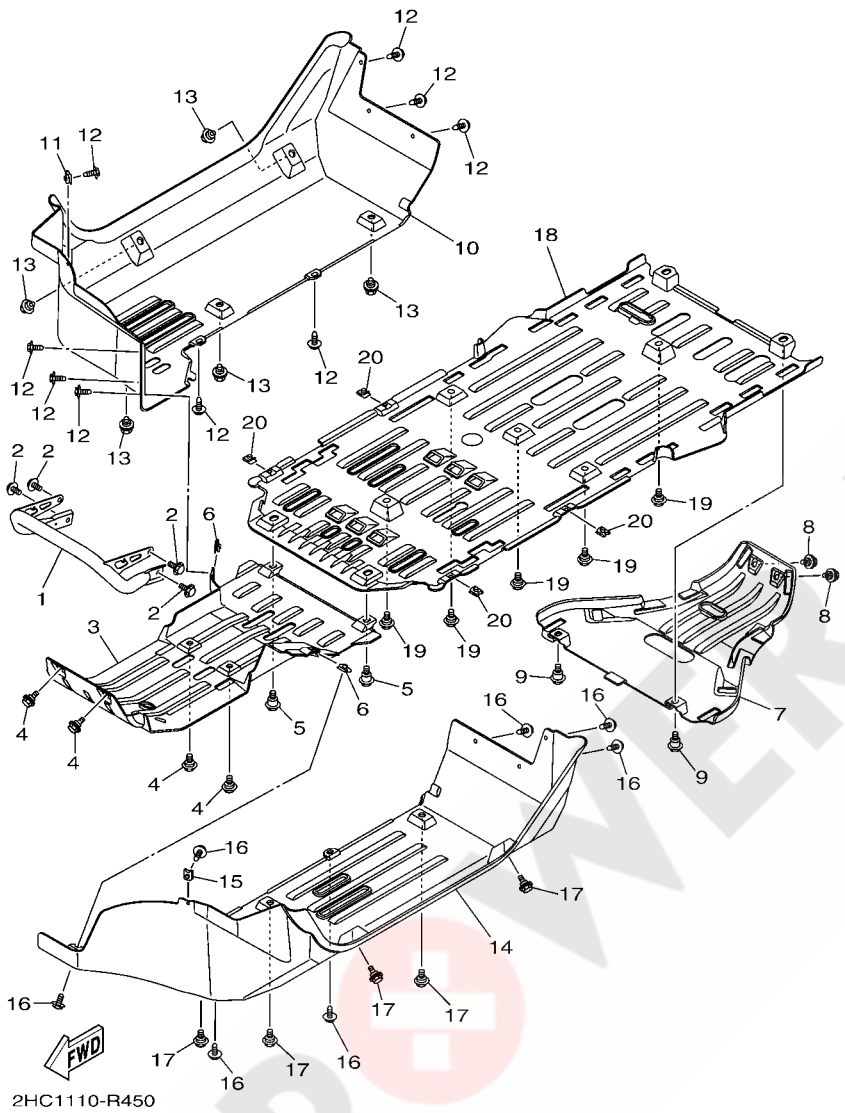

FIG. 45 GUARD

REF. NO.	PART NO.	DESCRIPTION	USA					REMARKS
1	2HC–F845N–00	BAR, CARRY FRONT	1					
2	95812–10016	BOLT, FLANGE	4					
3	2HC–F8385–00	COVER, UNDER	1					
4	90109–06202	BOLT	4					
5	90109–068A7	BOLT	2					
6	90183–060A6	NUT, SPRING	2					
7	2HC–F8395–00	COVER, UNDER 2	1					
8	90109–06202	BOLT	2					
9	90109–068A7	BOLT	2					
10	2HC–F2361–00	GUARD 1	1					
11	90183–060A6	NUT, SPRING	1					
12	90119–06226	BOLT, WITH WASHER	9					
13	90109–06202	BOLT	5					
14	2HC–F2362–00	GUARD 2	1					
15	90183–060A6	NUT, SPRING	1					
16	90119–06226	BOLT, WITH WASHER	7					
17	90109–06202	BOLT	5					
18	2HC–F8418–00	GUARD, ENGINE 1	1					
19	90109–06202	BOLT	5					
20	90183–060A6	NUT, SPRING	4					

POWER PARTS BY 4QUAD

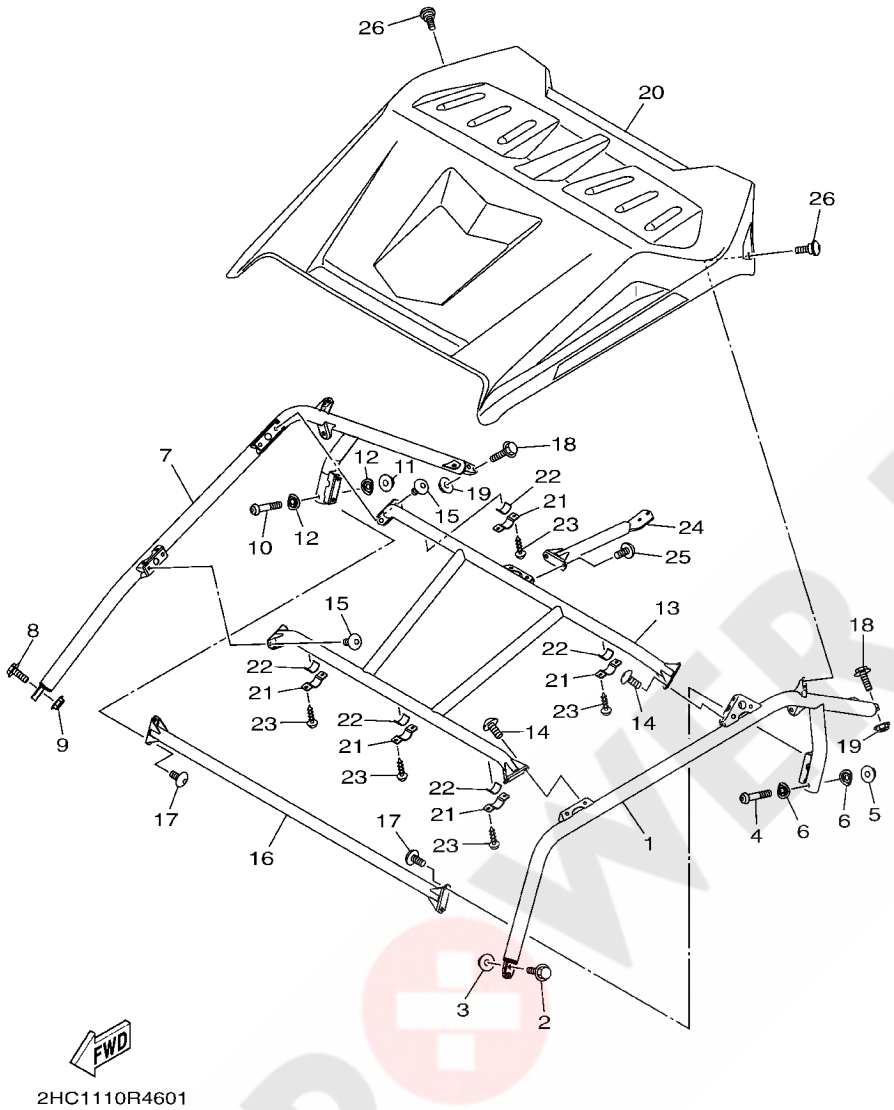

FIG. 46 GUARD 2

REF. NO.	PART NO.	DESCRIPTION	USA					REMARKS
1	2HC–K831A–00	SUPPORT, ROOF 3	1					
2	95812–10045	BOLT, FLANGE	2					
3	90185–10011	NUT, SELF-LOCKING	2					
4	92012–10060	BOLT, BUTTON HEAD	1					
5	90185–10011	NUT, SELF-LOCKING	1					
6	5UG–K7526–00	WASHER 2	2					
7	2HC–K831E–00	SUPPORT, ROOF 4	1					
8	95812–10045	BOLT, FLANGE	2					
9	90185–10011	NUT, SELF-LOCKING	2					
10	92012–10060	BOLT, BUTTON HEAD	1					
11	90185–10011	NUT, SELF-LOCKING	1					
12	5UG–K7526–00	WASHER 2	2					
13	2HC–K8392–00	MEMBER, ROOF FRAME	1					
14	90111–10802	BOLT,HEX. SOCKET BUTTON	4					
15	90111–10802	BOLT,HEX. SOCKET BUTTON	4					
16	2HC–K830A–00	ROOF SUPPORT ASSY 1	1					
17	90111–10802	BOLT,HEX. SOCKET BUTTON	4					
18	95812–10045	BOLT, FLANGE	4					
19	90185–10011	NUT, SELF-LOCKING	4					
20	2HC–K8314–00	COVER, SUN ROOF	1					
21	2HC–K8366–00	CLAMP, SUPPORT	5					
22	5UG–K7588–00	DAMPER	5					
23	90167–06800	SCREW, TAPPING	12					
24	2HC–K830B–00	ROOF SUPPORT ASSY 2	1					
25	90111–10802	BOLT,HEX. SOCKET BUTTON	2					
26	90109–06307	BOLT	2					

POWER PARTS By KQUAD

FIG. 47 GENERATOR

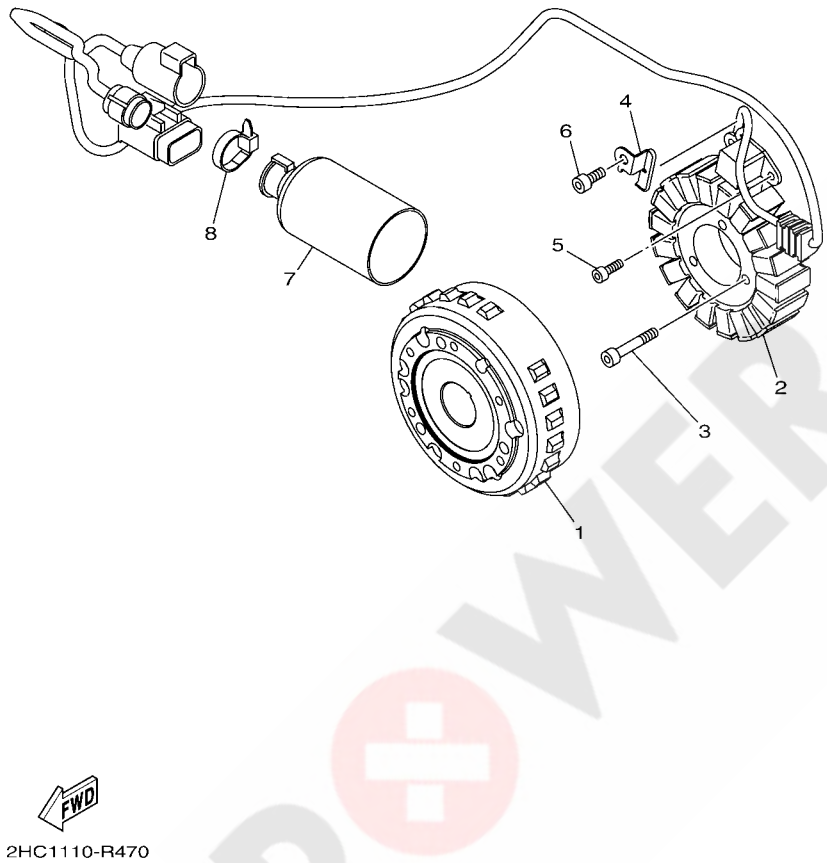

REF. NO.	PART NO.	DESCRIPTION	USA					REMARKS
1	2HC–81450–00	ROTOR ASSY	1					
2	2HC–81410–00	STATOR ASSY	1					
3	90110–06208	BOLT, HEXAGON SOCKET HEAD	3					
4	2HC–15113–00	PLATE	1					
5	90110–05034	BOLT, HEXAGON SOCKET HEAD	2					
6	90110–06187	BOLT, HEXAGON SOCKET HEAD	1					
7	8GL–8252U–00	COVER	1					
8	90464–13077	CLAMP	1					

POWER PARTS By ATV-QUAD

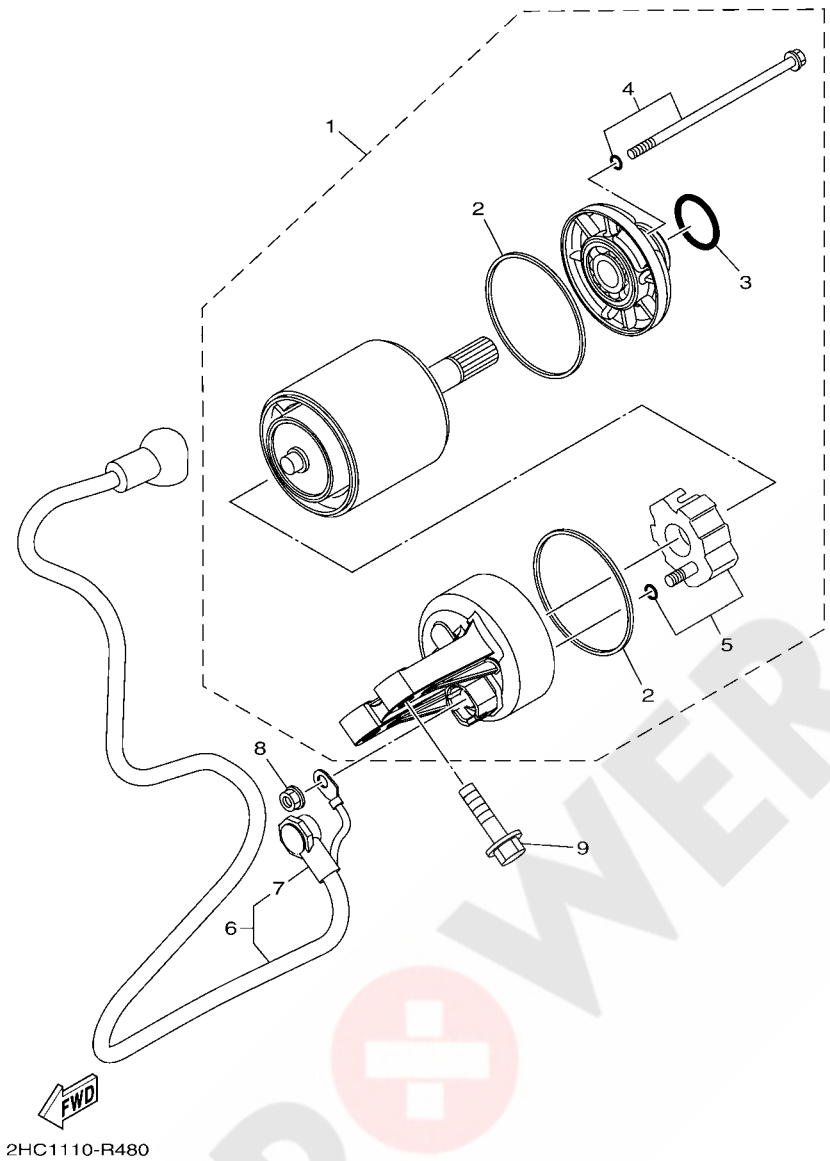

FIG. 48 STARTING MOTOR

REF. NO.	PART NO.	DESCRIPTION	USA					REMARKS
1	2HC–81890–00	MOTOR ASSY	1					
2	11H–81844–00	.GASKET	2					
3	1FK–81847–00	.O-RING	1					
4	28P–81826–00	.BOLT	2					
5	4B5–81840–00	.BRUSH HOLDER ASSY	1					
6	2HC–81815–00	CORD, STARTER MOTOR	1					
7	4B5–81871–00	.CAP	1					
8	4XV–8182A–00	NUT	2					
9	95812–08030	BOLT, FLANGE	2					

POWER PARTS By AXQUAD

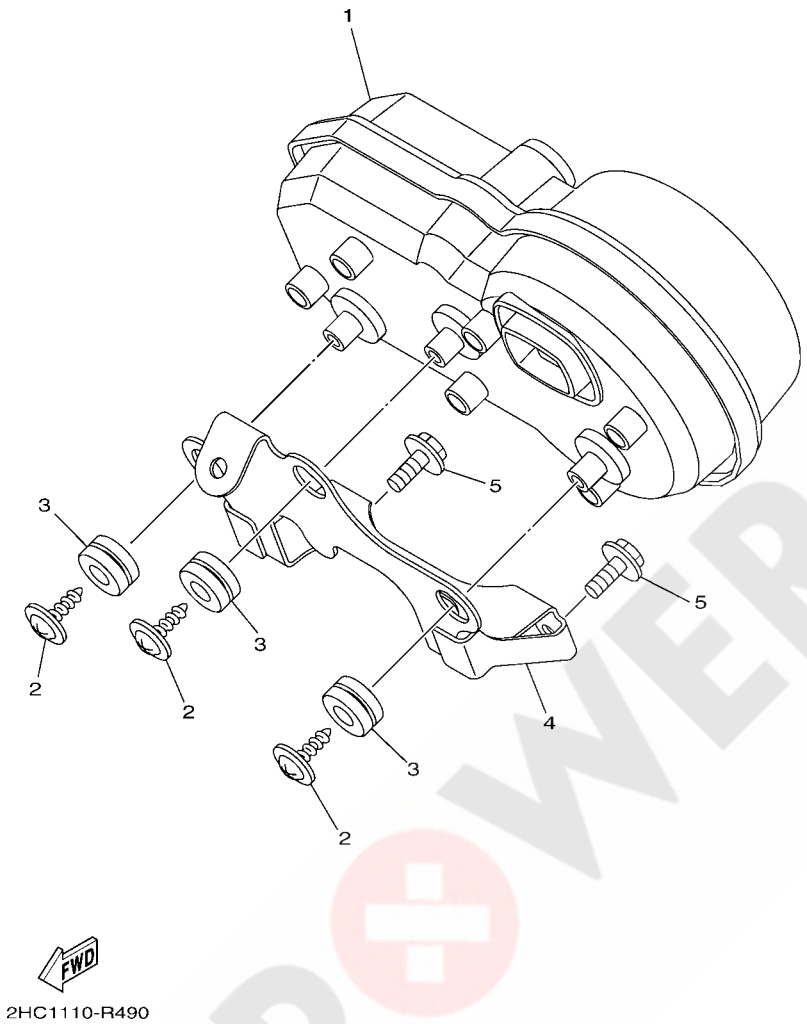

FIG. 49 METER

REF. NO.	PART NO.	DESCRIPTION	USA					REMARKS
1	2HC–83500–00	METER ASSY	1					
2	90164–05014	SCREW, TAPPING	3					
3	90480–14052	GROMMET	3					
4	2HC–H3519–00	BRACKET, METER	1					
5	95812–06016	BOLT, FLANGE	2					

POWER PARTS By 4xQUAD

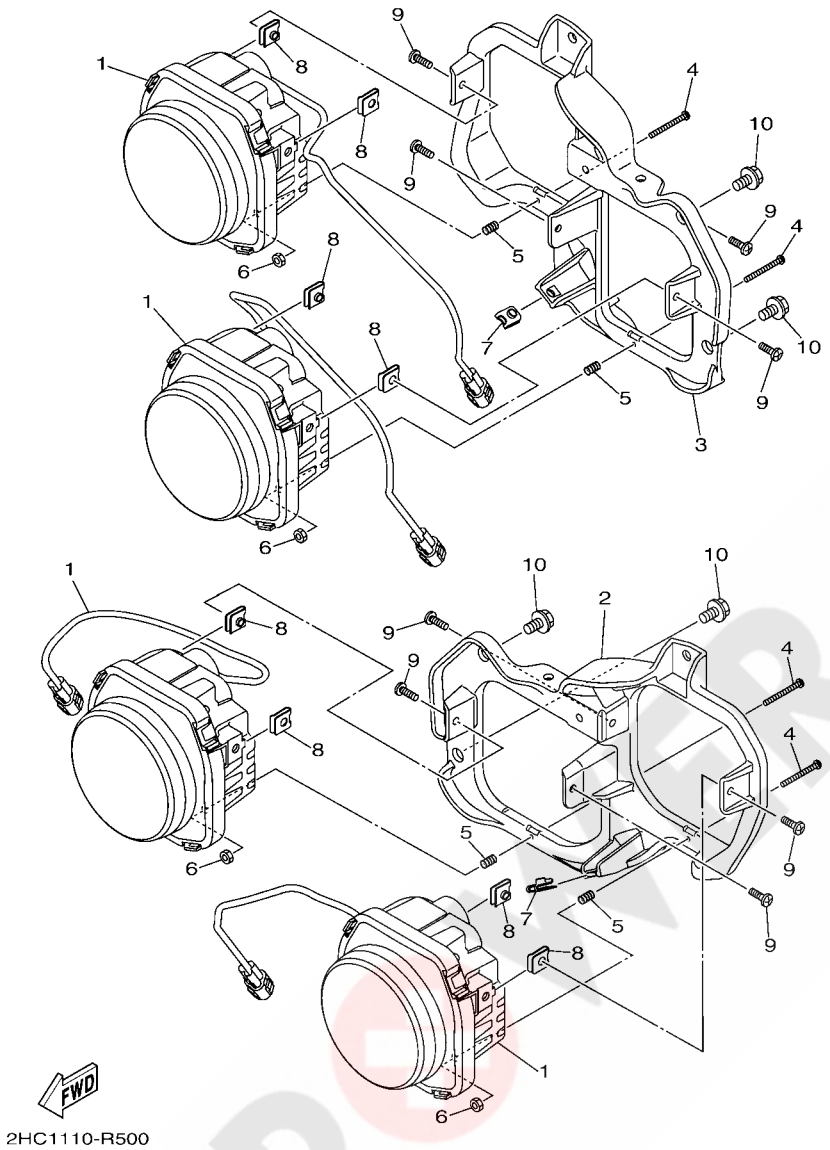

FIG. 50 HEADLIGHT

REF. NO.	PART NO.	DESCRIPTION	USA					REMARKS
1	2UD–84300–00	HEADLIGHT ASSY	4					
2	2HC–F831V–00	STAY, HEAD LIGHT 1	1					
3	2HC–F832V–00	STAY, HEAD LIGHT 2	1					
4	98502–03530	SCREW, PAN HEAD	4					
5	90501–08614	SPRING, COMPRESSION	4					
6	2GU–84334–00	NUT, ADJUSTING	4					
7	90183–060A6	NUT, SPRING	2					
8	90183–05008	NUT, SPRING	8					
9	98902–05016	SCREW, BIND	8					
10	95812–08016	BOLT, FLANGE	4					

POWER PARTS By axquad

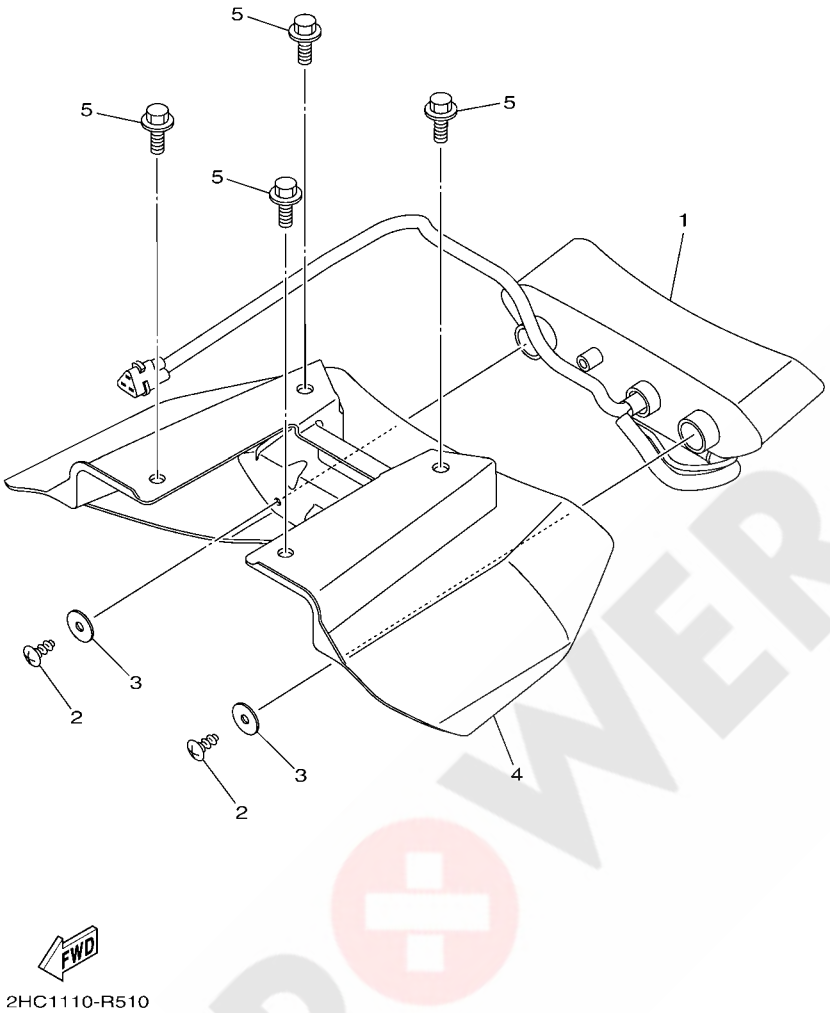

FIG. 51 TAILLIGHT

REF. NO.	PART NO.	DESCRIPTION	USA					REMARKS
1	1S3–84710–10	TAILLIGHT UNIT ASSY	1					
2	97707–50016	SCREW, TRUSS HEAD TAPPING	2					
3	90201–05033	WASHER, PLATE	2					
4	2HC–F172X–00	COVER, TAILLIGHT	1					
5	JW1–K6179–01	BOLT, SPECIAL 1	4					

POWER PARTS By 4xQUAD

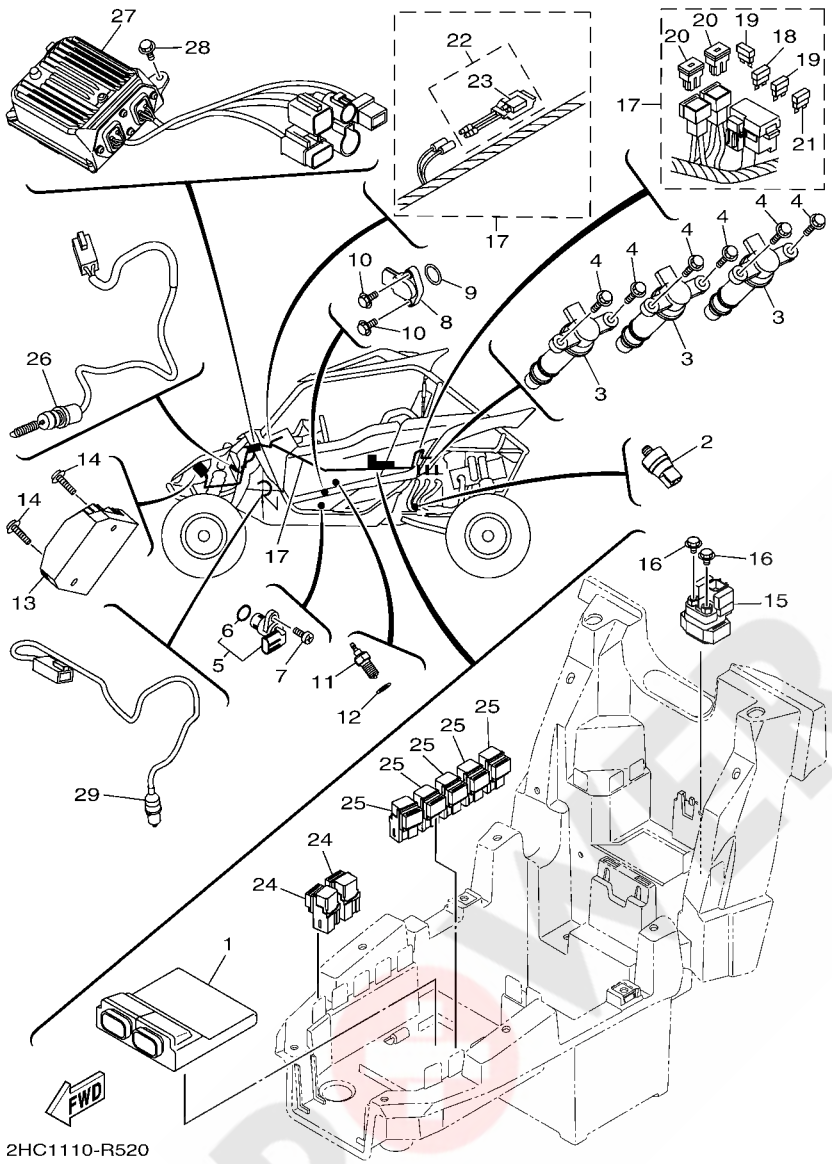

FIG. 52 ELECTRICAL 1

REF. NO.	PART NO.	DESCRIPTION	USA					REMARKS
1	2HC–8591A–00	ENGINE CONTROL UNIT ASSY	1					
2	8FP–82504–00	OIL PRESSURE SWITCH ASSY	1					
3	2HC–82310–00	IGNITION COIL ASSY	3					
4	95812–06025	BOLT, FLANGE	6					
5	1TP–83755–00	SENSOR, SPEED	1					
6	4D9–81168–00	.O-RING	1					
7	90110–06193	BOLT, HEXAGON SOCKET HEAD	1					
8	2HC–85899–00	SENSOR, GEAR POSITION	1					
9	93210–17008	O-RING	1					
10	90110–05067	BOLT, HEXAGON SOCKET HEAD	2					
11	3GB–82540–01	NEUTRAL SWITCH ASSY	1					
12	90430–10148	GASKET	1					
13	1D7–81960–01	RECTIFIER & REGULATOR ASSY	1					
14	90105–06833	BOLT, FLANGE	2					
15	4D3–81940–00	STARTER RELAY ASSY (RC19-077A)	1					
16	95022–06008	BOLT, FLANGE	2					
17	2HC–82590–00	WIRE HARNESS ASSY	1					
18	5JJ–82151–10	.FUSE (15A-BL)	3					
19	5JJ–82151–30	.FUSE (10A-BL)	5					
20	5PS–82151–00	.FUSE (40A)	2					
21	5JJ–82151–60	.FUSE (30A-BL)	2					
22	5B4–82180–00	.CIRCUIT BREAKER ASSY	1					
23	5B4–82560–00	..THERMO SWITCH ASSY	1					
24	5DM–81950–00	RELAY ASSY (G8HN-1C4T-DJ-Y52)	2					
25	8DM–81950–11	RELAY ASSY (8DM-11)	5					
26	4KB–82530–10	STOP SWITCH ASSY	1					
27	2HC–859A0–00	POWER STRG. CONT. UNIT ASSY	1					

POWER PARTS By 4WDAD

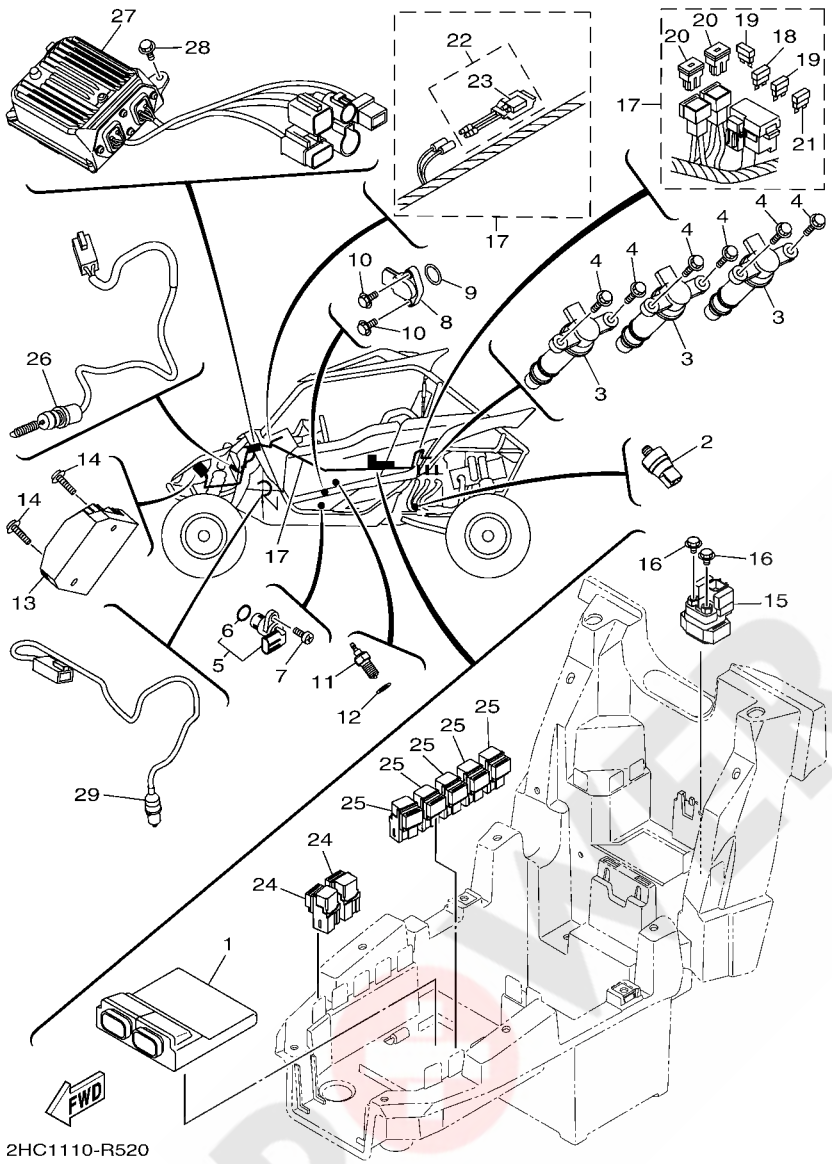

FIG. 52 ELECTRICAL 1

REF. NO.	PART NO.	DESCRIPTION	USA					REMARKS
28	95812–06016	BOLT, FLANGE	1					
29	5KM–82917–00	SWITCH	1					

POWER PARTS By 4xQUAD

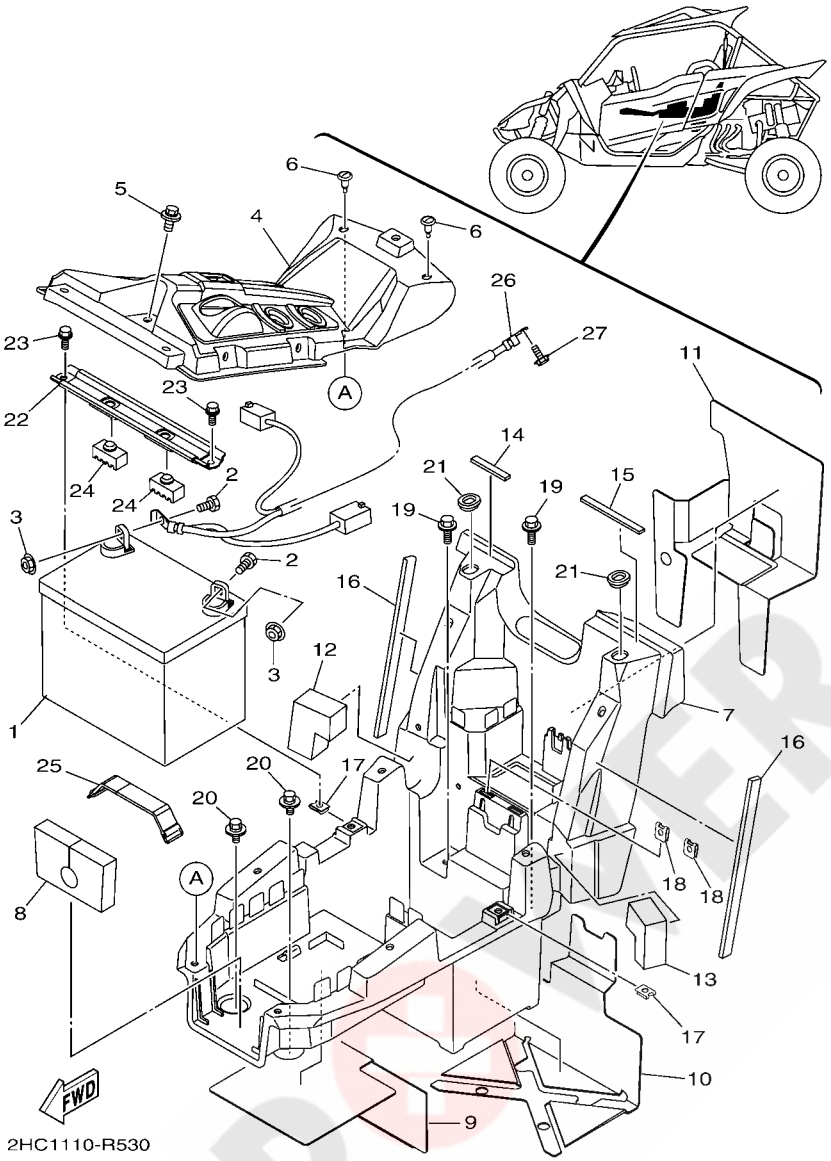

FIG. 53 ELECTRICAL 2

REF. NO.	PART NO.	DESCRIPTION	USA					REMARKS
1	5UG–H2100–00	BATTERY ASSY (GS U1L-11)	1					
2	97080–08020	BOLT	2					
3	90179–08015	NUT	2					
4	2HC–H2565–00	PANEL, SWITCH	1					
5	90119–06152	BOLT, WITH WASHER	1					
6	90269–07803	RIVET	2					
7	2HC–H212B–00	BOX, BATTERY 1	1					
8	2HC–8233W–00	INSU.	1					
9	2HC–8253E–00	INSULATOR 1	1					
10	2HC–8253F–00	INSULATOR 2	1					
11	2HC–8254E–00	INSULATOR	1					
12	2HC–2173M–00	SEAL 3	1					
13	2HC–2173N–00	SEAL 4	1					
14	90520–05020	DAMPER, PLATE	1					
15	90520–05021	DAMPER, PLATE	1					
16	90520–05022	DAMPER, PLATE	2					
17	90183–060A6	NUT, SPRING	2					
18	90183–05008	NUT, SPRING	2					
19	90119–06868	BOLT, WITH WASHER	2					
20	90119–06152	BOLT, WITH WASHER	2					
21	90480–01558	GROMMET	2					
22	2HC–H2128–00	BRACKET, BATTERY	1					
23	95022–06014	BOLT, FLANGE	2					
24	3C3–24741–00	PAD, SEAT	2					
25	2T4–82131–00	BAND, BATTERY	1					
26	2HC–82116–00	WIRE, MINUS LEAD	1					
27	95812–06014	BOLT, FLANGE	1					

POWER PARTS By axQUAD

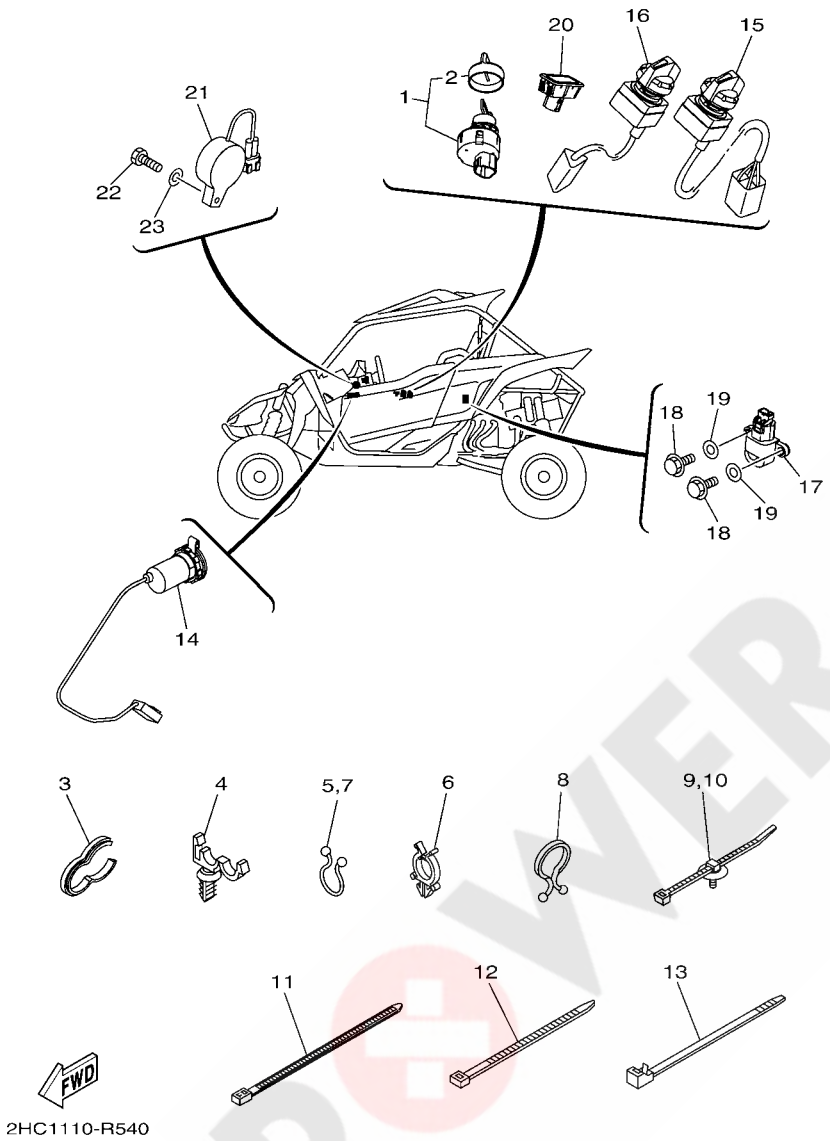

FIG. 54 ELECTRICAL 3

REF. NO.	PART NO.	DESCRIPTION	USA					REMARKS
1	5UG–H2510–00	MAIN SWITCH ASSY	1					
2	5UG–H2579–00	.CAP, KEY	1					
3	90464–15065	CLAMP	1					
4	90464–12830	CLAMP	23					d: 12mm
5	90464–14800	CLAMP	3					
6	90464–25826	CLAMP	4					
7	90464–20804	CLAMP	4					
8	90464–30040	CLAMP	3					
9	5B4–F1338–00	CLAMP	17					
10	1NS–F1338–00	CLAMP	1					
11	90464–40825	CLAMP	4					
12	90464–48800	CLAMP	13					
13	90464–51800	CLAMP	4					213X7.60
14	1HP–H254B–10	TERMINAL COMP.	1					
15	2HC–82526–00	SWITCH, LIGHT	1					
16	2HC–87280–00	SWITCH, SELECT	1					
17	3B4–82576–00	SENSOR, LEAN ANGLE	1					
18	97002–05016	BOLT	2					
19	92902–05600	WASHER, PLATE	2					
20	1XD–H3530–00	PILOT LIGHT ASSY	1					
21	2MB–83383–00	BUZZER	1					
22	97002–05020	BOLT	1					
23	92902–05600	WASHER, PLATE	1					

POWER PARTS By 4xQUAD

FIG. 55 GRAPHICS

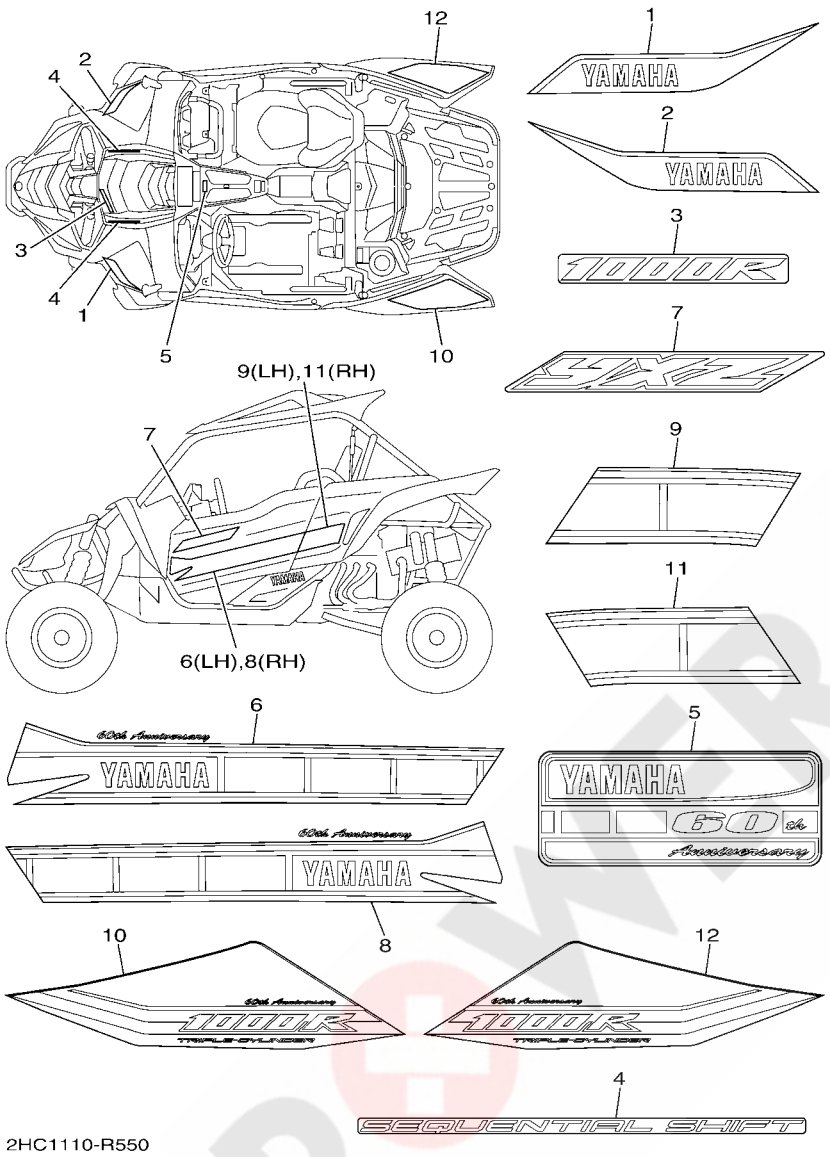

REF. NO.	PART NO.	DESCRIPTION	USA					REMARKS
1	2HC–F15B9–00	GRAPHIC 5	1					
2	2HC–F15C9–00	GRAPHIC 6	1					
3	2HC–F1787–00	EMBLEM 7	1					
4	2HC–F17D5–00	EMBLEM 8	2					
5	B11–2416B–00	EMBLEM	1					
6	2HC–F1781–00	EMBLEM 1	1					
7	2HC–F1783–00	EMBLEM 3	2					
8	2HC–F1782–00	EMBLEM 2	1					
9	2HC–F165G–00	GRAPHIC, REAR (LH)	1					
10	2HC–F163G–00	EMBLEM 1	1					
11	2HC–F165H–00	GRAPHIC, REAR (RH)	1					
12	2HC–F163H–00	EMBLEM 2	1					

POWER PARTS By ATVQUAD

FIG. 56 EMBLEM & LABEL 1

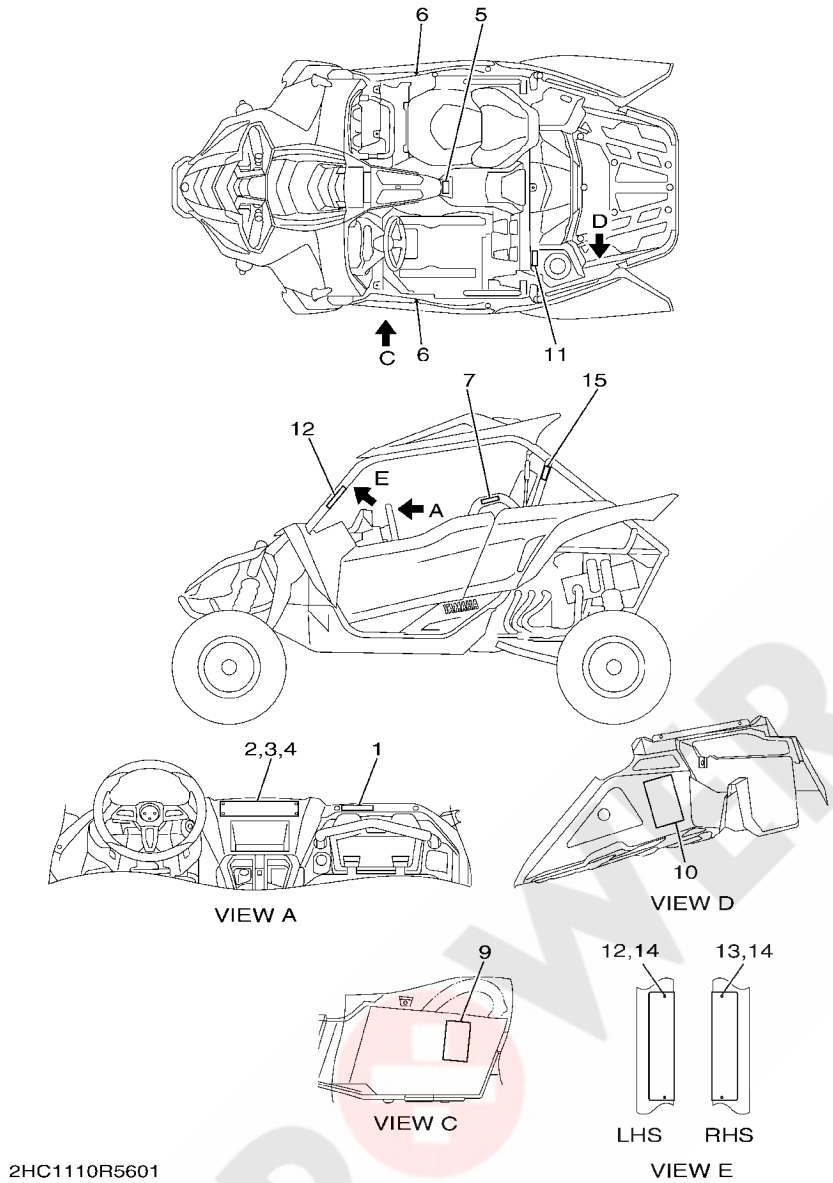

REF. NO.	PART NO.	DESCRIPTION	USA					REMARKS
1	1XD–F8446–00	LABEL, CAUTION	1					ENGLISH
2	2MB–F1568–00	LABEL, WARNING	1					ENGLISH
3	4XE–F1539–10	RIVET	4					
4	4XE–F1549–00	WASHER, FENDER MOLD	4					
5	1XD–F1558–00	LABEL, WARNING 2	1					ENGLISH
6	2HC–F15D9–00	GRAPHIC 1	2					
7	1XD–K8483–00	LABEL WARNING	2					ENGLISH
9	2HC–F1696–02	LABEL, CAUTION	1					
10	2HC–F4897–02	EMBLEM	1					
11	1XP–F151F–00	LABEL 3	1					ENGLISH
12	5B4–K7761–00	LABEL, WARNING 1	1					ENGLISH
13	5B4–K7762–00	LABEL, WARNING 2	1					ENGLISH
14	4XE–F1539–10	RIVET	4					
15	1XD–F4164–00	EMBLEM 4	1					ENGLISH

POWER PARTS By ATVQUAD

PART NO.	REF. NO.
2HC–11101–09	1 – 1
5VY–1111G–00	1 – 32
	1 – 36
2C0–11133–11	1 – 5
8HF–11134–10	1 – 6
2HC–11166–00	1 – 29
2HC–11167–00	8 – 35
2HC–11181–00	1 – 33
2HC–11191–00	1 – 17
2HC–11193–00	1 – 19
214–11198–01	27 – 33
2HC–11400–00	2 – 1
2HC–11406–00	2 – 13
2HC–11407–00	2 – 23
3LD–11416–10	2 – 5
3LD–11416–20	2 – 5
3LD–11416–30	2 – 5
3LD–11416–40	2 – 5
3LD–11416–50	2 – 5
3LD–11416–60	2 – 5
3LD–11416–70	2 – 5
8ES–11428–01	2 – 30
8ES–11454–00	2 – 26
2HC–11464–00	2 – 33
2HC–11465–00	13 – 1
2HC–11478–00	2 – 14
8ES–11478–00	2 – 31
2HC–11530–00	2 – 24
2HC–11571–00	2 – 37
2HC–11603–00	2 – 7
2HC–11631–00	2 – 6
2HC–11633–00	2 – 8
2HC–11650–00	2 – 2
5PX–11654–00	2 – 3
5JW–11656–00	2 – 4
5JW–11656–10	2 – 4
5JW–11656–20	2 – 4
5JW–11656–30	2 – 4
5JW–11656–40	2 – 4
5JW–11656–50	2 – 4
8GL–12111–10	3 – 1
2HC–12113–00	3 – 4
2HC–12114–00	3 – 5
1RC–12116–00	3 – 3
3D7–12117–00	3 – 6
1WG–12118–00	3 – 7
2HC–12119–00	3 – 8
8GL–12121–10	3 – 2

PART NO.	REF. NO.
4C8–12153–09	3 – 10
4C8–12153–10	3 – 10
1HX–12168–00	3 – 9
1HX–12168–20	3 – 9
1HX–12168–40	3 – 9
1HX–12168–60	3 – 9
1HX–12168–80	3 – 9
1HX–12168–A0	3 – 9
1HX–12168–F0	3 – 9
1HX–12168–H1	3 – 9
1HX–12168–K1	3 – 9
1HX–12168–M1	3 – 9
1HX–12168–R1	3 – 9
1HX–12168–U1	3 – 9
1HX–12168–W1	3 – 9
1HX–12168–Y1	3 – 9
1HX–12169–11	3 – 9
1HX–12169–31	3 – 9
1HX–12169–50	3 – 9
1HX–12169–70	3 – 9
1HX–12169–90	3 – 9
1HX–12169–E0	3 – 9
1HX–12169–G0	3 – 9
1HX–12169–J0	3 – 9
1HX–12169–L0	3 – 9
1HX–12169–N0	3 – 9
1HX–12169–T0	3 – 9
2HC–12170–00	4 – 1
2HC–12176–00	4 – 3
2HC–12180–00	4 – 2
2HC–12210–00	4 – 6
2C0–12213–00	4 – 7
5BE–12241–00	1 – 18
8GL–12251–01	4 – 9
2HC–12252–00	4 – 10
5LP–12411–00	5 – 23
4NX–12413–00	5 – 24
2HC–12417–00	5 – 22
2HC–12420–00	5 – 1
2HC–12422–00	5 – 2
8ES–12427–00	5 – 3
8ES–12434–00	5 – 15
8ES–12435–00	5 – 14
8ES–12436–00	5 – 19
8ES–12438–00	5 – 4
2HC–1243A–00	5 – 12
8ES–12450–01	5 – 8
8ES–12459–01	5 – 7

PART NO.	REF. NO.
2HC–12482–00	5 – 29
8GL–12485–00	5 – 30
8FA–12551–00	5 – 32
2HC–12588–00	5 – 43
2HC–12589–00	5 – 34
2HC–13115–00	11 – 17
8ES–13115–00	7 – 17
137–13115–01	15 – 2
8ES–13284–00	7 – 2
8GL–13300–00	7 – 1
2HC–13324–00	13 – 2
8GL–13406–00	24 – 4
2HC–13411–00	15 – 28
2HC–13414–00	7 – 27
2HC–13417–00	7 – 25
5GH–13440–50	7 – 24
2HC–13470–00	7 – 32
18P–13543–00	9 – 17
2HC–13545–00	9 – 28
8FP–13556–10	9 – 2
8GL–13571–00	9 – 21
8GL–13573–00	9 – 20
8HF–13595–00	1 – 11
	1 – 13
2HC–13750–00	9 – 1
2HC–13761–00	9 – 3
8HF–13892–00	9 – 12
8GL–13893–00	9 – 13
2HC–13894–00	9 – 9
8GL–13895–00	9 – 14
8ES–13898–00	7 – 21
B16–13907–00	31 – 2
2HC–13930–00	9 – 23
2HC–13971–00	31 – 6
5PW–1410F–00	9 – 10
8A7–14139–00	9 – 30
5LP–14147–00	9 – 7
1UY–14155–00	9 – 26
1S3–14161–00	9 – 25
895–14169–00	9 – 29
68V–1416A–00	9 – 4
2C0–14216–00	9 – 16
8CC–14216–10	9 – 18
5UG–14293–00	9 – 6
5PW–14349–00	9 – 24
8FP–14349–30	9 – 11
8GL–14503–00	9 – 31
8GL–14534–00	9 – 22

PART NO.	REF. NO.
5YP–14562–00	9 – 5
2HC–14602–00	10 – 1
4FM–14613–00	10 – 2
2HC–14710–00	10 – 4
1SL–14714–00	10 – 8
1SL–14715–00	10 – 9
2HC–14755–00	10 – 6
2HC–1475P–00	10 – 13
2HC–14780–09	10 – 5
2HC–14799–00	10 – 11
5VY–1482K–00	1 – 20
5JW–1482K–01	1 – 23
2HC–14840–00	10 – 18
2HC–14889–00	1 – 25
5JW–14890–00	1 – 24
5SL–14890–00	1 – 21
5VY–14899–01	1 – 22
2HC–15109–09	11 – 1
2HC–15113–00	47 – 4
8ES–15167–00	11 – 3
2HC–15191–00	11 – 27
18G–15362–00	15 – 7
3Y1–15363–10	1 – 27
6TA–15370–00	8 – 40
6TA–15378–00	8 – 33
4JT–15381–01	2 – 27
2HC–15415–00	15 – 26
2HC–15421–00	11 – 16
2HC–15453–00	15 – 27
2HC–15461–00	11 – 24
2HC–15512–00	12 – 2
8FA–15515–00	12 – 1
8ES–15521–00	12 – 3
2HC–15541–00	11 – 5
2HC–15590–00	12 – 4
2HC–16111–00	13 – 5
2HC–16150–00	13 – 10
1D7–16154–00	13 – 11
2HC–16181–00	13 – 29
2HC–16183–00	13 – 26
2HC–16317–00	13 – 4
2HC–16318–00	13 – 3
5YU–16321–00	13 – 18
2H7–16325–00	13 – 17
	13 – 19
1PK–16331–00	13 – 16
36Y–16334–00	13 – 21
36Y–16335–00	13 – 22

PART NO.	REF. NO.
132–16346–00	17 – 9
2HC–16350–00	13 – 20
1TX–16352–00	13 – 23
4KG–16356–00	13 – 32
2HC–16357–00	13 – 35
2HC–16371–00	13 – 12
2HC–16381–00	13 – 37
36Y–16383–00	13 – 15
36Y–16384–00	13 – 14
2H7–16385–00	13 – 13
2HC–16587–00	13 – 25
2HC–16775–00	2 – 15
2HC–17111–00	14 – 11
2HC–17121–00	14 – 6
2HC–17141–00	14 – 3
2HC–17151–00	14 – 8
2HC–17211–00	14 – 19
2HC–17221–00	14 – 25
2HC–17231–00	14 – 24
2HC–17241–00	14 – 26
2HC–1724A–00	14 – 37
2HC–17251–00	14 – 22
2HC–17253–00	14 – 29
2HC–17411–00	14 – 1
2HC–17421–00	14 – 15
2HC–17432–00	14 – 34
2HC–17472–00	15 – 16
2HC–17521–00	16 – 14
2HC–17523–00	16 – 1
2HC–17524–00	16 – 2
2S3–17527–00	16 – 4
2HC–17528–00	16 – 3
23P–17529–00	13 – 6
	16 – 7
2HC–17541–00	15 – 1
2HC–17542–00	15 – 20
2HC–17558–00	15 – 37
2HC–17576–00	16 – 19
2HC–17582–00	14 – 31
2HC–17583–00	16 – 5
2HC–17665–00	15 – 12
2HC–17818–00	16 – 24
2HC–17832–00	16 – 11
2HC–17880–00	15 – 9
2HC–18101–00	18 – 2
2HC–18115–00	18 – 17
1D7–18127–00	18 – 1
2HC–18140–00	17 – 6

PART NO.	REF. NO.
2HC–18144–00	17 – 10
2HC–18169–00	18 – 20
4NX–18175–00	17 – 8
2HC–18190–01	18 – 10
2HC–18337–00	17 – 12
2HC–18380–00	17 – 11
2HC–18431–00	17 – 17
2HC–18473–00	14 – 36
2HC–18511–00	17 – 2
2HC–18512–00	17 – 3
3D8–18531–00	17 – 4
3D8–18535–00	17 – 5
2HC–18540–00	17 – 1
2HC–2131P–00	15 – 36
2HC–2147J–00	15 – 32
2HC–2147K–00	15 – 34
2HC–2172S–00	22 – 2
2HC–2173M–00	53 – 12
2HC–2173N–00	53 – 13
2HC–2173S–00	22 – 8
2HC–2174A–00	43 – 2
2HC–2174S–00	43 – 8
2HC–21751–00	24 – 1
4XV–2177L–01	44 – 5
1AA–21815–00	6 – 25
1AA–21874–00	6 – 26
2HC–2254G–00	30 – 21
2HC–23421–00	28 – 13
1XD–23517–00	25 – 5
	29 – 11
	37 – 35
	38 – 35
5YT–23517–00	30 – 32
2HC–23527–00	25 – 13
	25 – 20
2HC–23528–00	25 – 16
	25 – 23
2HC–23549–00	25 – 11
	25 – 18
2HC–23579–00	29 – 2
	29 – 5
	34 – 26
	35 – 26
2HC–23754–00	25 – 24
2HC–23810–00	30 – 20
2HC–23841–00	30 – 15
2HC–23845–00	25 – 14
	25 – 21

PART NO.	REF. NO.
2HC–23849–00	30 – 23
2HC–2385L–00	28 – 6
16B–2385L–10	29 – 30
2HC–2385M–00	28 – 7
16B–2385M–10	29 – 31
8GN–2386E–00	29 – 29
2HC–238B0–00	30 – 22
B11–2416B–00	55 – 5
69J–2417H–00	9 – 8
67F–24377–00	8 – 36
28P–24380–00	31 – 27
1S3–24486–00	31 – 4
3B4–24491–00	31 – 3
2HC–24519–00	42 – 13
2P5–24610–00	31 – 16
3C3–24741–00	53 – 24
2HC–2510F–00	34 – 9
	35 – 9
2HC–2510G–00	34 – 11
	35 – 11
2HC–2510H–00	34 – 10
	35 – 10
2HC–2510J–00	34 – 8
	35 – 8
2HC–2510U–00	34 – 15
	35 – 15
2HC–2511G–00	34 – 14
	35 – 14
2HC–2511H–00	34 – 13
	35 – 13
2HC–2512G–00	34 – 16
	35 – 16
	37 – 19
	38 – 19
2HC–2512H–00	34 – 17
	35 – 17
2HC–2512J–00	37 – 16
	38 – 16
3B4–2512J–00	34 – 19
	35 – 19
3B4–25182–00	34 – 18
	35 – 18
16B–25185–00	37 – 14
	38 – 14
2HC–2518E–00	34 – 12
	35 – 12
2HC–2530T–00	37 – 9
	38 – 9

PART NO.	REF. NO.
2HC–2530V–00	37 – 10
	38 – 10
2HC–2530X–00	37 – 11
	38 – 11
2HC–2530Y–00	37 – 12
	38 – 12
16B–2536E–00	37 – 15
	38 – 15
2HC–2536E–00	37 – 13
	38 – 13
5B4–25415–00	40 – 8
2HC–25719–00	37 – 17
	38 – 17
5UG–25719–00	42 – 6
1XD–25802–00	36 – 6
	36 – 17
3LD–25802–00	39 – 6
	39 – 17
1XD–25803–00	36 – 7
	36 – 18
3JD–25803–00	39 – 7
	39 – 18
2HC–25805–00	36 – 14
	36 – 25
2HC–25806–00	39 – 14
	39 – 25
5B4–25806–00	40 – 23
5UG–25808–00	42 – 2
2HC–2580T–00	36 – 5
2HC–2580U–00	36 – 16
2HC–2580V–00	39 – 5
2HC–2580W–00	39 – 16
5B4–25814–10	40 – 5
2HC–25819–00	36 – 13
	36 – 24
5B4–2581R–00	40 – 7
1AE–2582A–00	41 – 14
2HC–25833–00	36 – 11
	36 – 22
	39 – 11
	39 – 22
5B4–25833–00	40 – 14
2HC–2583T–00	42 – 1
5UG–25852–00	42 – 7
3XP–25852–50	41 – 35
2VN–25854–00	41 – 36
5UG–25854–00	42 – 8
2VN–25855–00	41 – 37

PART NO.	REF. NO.
5UG–25855–00	42 – 9
5B4–2585F–00	40 – 27
3B4–25876–10	42 – 22
	42 – 36
5UG–25877–00	42 – 4
5UG–25878–00	42 – 3
5B4–25880–00	40 – 6
5UG–25880–00	42 – 10
JX2–25885–11	42 – 29
2HC–25894–00	42 – 5
5JJ–25894–01	41 – 34
2HC–2589E–00	42 – 14
1XD–25905–00	40 – 4
5B4–25913–00	40 – 10
2HC–25917–00	36 – 10
	36 – 21
	39 – 10
	39 – 21
3JD–25917–00	40 – 19
5B4–25919–00	40 – 25
2HC–25921–00	39 – 13
	39 – 24
5B4–25924–00	40 – 24
2HC–25926–00	36 – 8
	36 – 19
	39 – 8
	39 – 19
3JD–25926–00	40 – 18
2HC–25926–10	36 – 9
	36 – 20
	39 – 9
	39 – 20
1UY–25926–51	40 – 21
1UY–25937–51	40 – 20
1UY–25938–51	40 – 22
5B4–25973–00	40 – 13
1UY–25973–51	40 – 15
5B4–25975–00	40 – 11
5B4–25976–00	40 – 9
5B4–25976–10	40 – 16
5B4–25976–20	40 – 17
5B4–25977–00	40 – 26
5B4–25978–00	40 – 12
2HC–259A2–00	37 – 21
	38 – 21
2HC–26293–00	37 – 18
	38 – 18
2HC–26311–00	41 – 28

PART NO.	REF. NO.
2HC–26341–00	41 – 47
2HC–2637E–00	30 – 52
2HC–26397–00	37 – 20
	38 – 20
2HC–26450–00	41 – 12
4SS–27218–00	41 – 19
	42 – 11
2YK–27222–00	41 – 20
	42 – 12
1XD–2837G–00	20 – 8
1XD–2837H–00	20 – 9
8HG–28386–00	44 – 6
2HC–43804–00	2 – 39
2HC–46107–00	16 – 25
	27 – 26
2HC–46108–00	13 – 45
2HC–46109–00	27 – 36
2HC–46114–00	27 – 24
3B4–46117–00	27 – 7
3B4–46117–10	27 – 7
3B4–46117–20	27 – 7
3B4–46117–30	27 – 7
2HC–46126–00	26 – 33
3B4–46134–00	27 – 11
3B4–46135–00	27 – 12
2HC–46136–00	26 – 37
5GT–46136–00	27 – 41
2HC–46137–00	26 – 36
5GT–46137–00	27 – 40
2HC–46141–00	27 – 4
3B4–46142–00	27 – 23
4WV–46145–10	27 – 17
4S1–46146–01	27 – 5
2HC–46147–00	13 – 40
2HC–46160–00	27 – 1
2HC–46161–00	27 – 3
1XD–46162–00	27 – 2
3B4–46163–00	27 – 14
3B4–46164–00	27 – 9
3B4–46166–00	27 – 10
1HP–4616A–00	27 – 16
2HC–46172–00	26 – 31
2HC–46187–00	2 – 42
	13 – 48
5GT–46187–00	16 – 28
	27 – 29
5GH–46293–00	27 – 19
2HC–46380–00	16 – 17

PART NO.	REF. NO.
2HC–46470–00	27 – 6
5KM–46559–00	26 – 35
4D9–81168–00	52 – 6
2HC–81410–00	47 – 2
2HC–81450–00	47 – 1
2HC–81677–00	42 – 19
	42 – 31
2HC–81815–00	48 – 6
28P–81826–00	48 – 4
4XV–8182A–00	48 – 8
4B5–81840–00	48 – 5
11H–81844–00	48 – 2
1FK–81847–00	48 – 3
4B5–81871–00	48 – 7
2HC–81890–00	48 – 1
4D3–81940–00	52 – 15
5DM–81950–00	52 – 24
8DM–81950–11	52 – 25
1D7–81960–01	52 – 13
2HC–82116–00	53 – 26
2T4–82131–00	53 – 25
5PS–82151–00	52 – 20
5JJ–82151–10	52 – 18
5JJ–82151–30	52 – 19
5JJ–82151–60	52 – 21
5B4–82180–00	52 – 22
2HC–82310–00	52 – 3
2HC–8233W–00	53 – 8
1WS–82380–00	9 – 15
8FP–82504–00	52 – 2
2HC–82526–00	54 – 15
8GL–8252U–00	47 – 7
4KB–82530–10	52 – 26
2HC–8253E–00	53 – 9
2HC–8253F–00	53 – 10
3GB–82540–01	52 – 11
2HC–8254E–00	53 – 11
5B4–82560–00	52 – 23
3B4–82576–00	54 – 17
2HC–8258K–00	20 – 22
2HC–82590–00	52 – 17
2HC–8259K–00	20 – 23
5KM–82917–00	52 – 29
2MB–83383–00	54 – 21
2HC–83500–00	49 – 1
1TP–83755–00	52 – 5
2UD–84300–00	50 – 1
2GU–84334–00	50 – 6

PART NO.	REF. NO.
1S3–84710–10	51 – 1
2HC–85720–00	24 – 2
5YP–85790–00	5 – 26
3B4–85885–00	9 – 19
8FP–85886–00	8 – 23
2HC–85899–00	52 – 8
2HC–8591A–00	52 – 1
2HC–859A0–00	52 – 27
2HC–87280–00	54 – 16
1CT–E1195–00	26 – 8
1XD–E1428–00	26 – 15
2HC–E1429–00	26 – 26
1XD–E142B–00	26 – 25
1XD–E1614–00	26 – 21
2HC–E2157–00	26 – 10
1XD–E2228–00	26 – 2
2HC–E2405–00	6 – 16
2HC–E2461–00	6 – 15
1XD–E2462–00	6 – 18
2HC–E246A–00	20 – 40
2HC–E246E–00	20 – 43
2HC–E2483–00	6 – 7
2HC–E2564–00	6 – 6
2HC–E2576–00	6 – 1
2HC–E2577–00	6 – 2
2HC–E2578–00	6 – 3
2HC–E2579–00	6 – 4
1XD–E2675–00	6 – 17
1CT–E3275–00	26 – 11
2HC–E3416–00	7 – 9
2HC–E3418–00	7 – 14
2HC–E3464–00	7 – 7
	7 – 10
	7 – 12
	7 – 15
2HC–E3487–00	7 – 34
2HC–E3499–00	7 – 36
2HC–E4126–00	8 – 9
2HC–E4411–01	8 – 2
2HC–E4412–00	8 – 6
2HC–E4421–00	8 – 3
2HC–E4422–00	8 – 8
2HC–E4429–00	8 – 5
	8 – 11
2HC–E4437–01	8 – 1
4ST–E443E–00	8 – 20
B16–E443E–00	8 – 19
2HC–E4451–00	8 – 13

PART NO.	REF. NO.
2HC–E4452–00	8 – 4
2HC–E4453–00	8 – 16
2HC–E4457–01	8 – 7
2HC–E4458–00	8 – 14
2HC–E445B–00	8 – 10
2HC–E4461–00	8 – 17
2HC–E4462–00	8 – 18
2HC–E4467–00	8 – 15
2HC–E4476–00	8 – 12
2HC–E4881–00	10 – 16
2HC–E4882–00	10 – 19
1XD–E511B–00	26 – 7
1CT–E5371–00	26 – 6
2HC–E8110–00	41 – 8
2HC–E8172–00	18 – 22
2HC–E8174–00	18 – 15
2HC–F110A–00	19 – 5
2HC–F1110–00	19 – 1
2HC–F111B–00	19 – 2
2HC–F115C–01	19 – 18
2HC–F117F–10	22 – 21
1XD–F1208–00	30 – 8
2HC–F124E–11	22 – 20
1NS–F1338–00	54 – 10
5B4–F1338–00	41 – 29
	54 – 9
2HC–F1349–00	19 – 14
1XD–F139T–00	20 – 2
2HC–F1510–00	20 – 21
1XD–F1515–00	20 – 5
1XD–F1516–00	20 – 7
1XP–F151B–00	44 – 7
1XP–F151F–00	56 – 11
4XE–F1539–10	56 – 3
	56 – 14
4XE–F1549–00	56 – 4
1XD–F1558–00	56 – 5
2MB–F1568–00	56 – 2
2HC–F15B9–00	55 – 1
2HC–F15C9–00	55 – 2
2HC–F15D9–00	56 – 6
2HC–F160F–00	20 – 4
2HC–F163G–00	55 – 10
2HC–F163H–00	55 – 12
2HC–F1643–00	44 – 8
2HC–F1644–00	44 – 10
2HC–F165G–00	55 – 9
2HC–F165H–00	55 – 11

PART NO.	REF. NO.
2HC–F1696–02	56 – 9
2HC–F16A0–00	23 – 4
2HC–F16B0–00	23 – 24
2HC–F171A–10	22 – 14
2HC–F172W–00	44 – 4
2HC–F172X–00	51 – 4
2HC–F1731–00	21 – 19
2HC–F1736–00	23 – 2
	23 – 22
2HC–F1741–00	21 – 23
2HC–F1742–00	23 – 7
	23 – 27
2HC–F1745–00	8 – 25
2HC–F1748–00	23 – 15
	23 – 35
2HC–F174N–00	8 – 26
1XD–F175B–01	20 – 30
	30 – 45
2HC–F1781–00	55 – 6
2HC–F1782–00	55 – 8
2HC–F1783–00	55 – 7
2HC–F1787–00	55 – 3
2HC–F178J–00	23 – 18
	23 – 38
1XD–F178K–00	30 – 11
2HC–F17D5–00	55 – 4
2HC–F17E0–00	23 – 41
2HC–F17F0–00	23 – 43
2HC–F17N1–00	23 – 6
	23 – 26
5B4–F1871–01	6 – 24
2HC–F194J–00	19 – 16
2HC–F1981–01	26 – 43
2HC–F1982–10	20 – 38
2HC–F198F–00	29 – 28
2HC–F2104–10	25 – 1
2HC–F2105–10	25 – 2
2HC–F2106–10	25 – 10
2HC–F2107–10	25 – 17
2HC–F2149–00	26 – 28
2HC–F2200–00	28 – 1
1HP–F2259–01	28 – 2
	29 – 22
2HC–F2327–01	21 – 1
2HC–F2328–01	21 – 6
2HC–F2341–00	37 – 41
2HC–F2342–00	38 – 41
2HC–F2361–00	45 – 10

PART NO.	REF. NO.
2HC–F2362–00	45 – 14
2HC–F2417–00	32 – 6
	32 – 16
2HC–F2548–00	41 – 1
2HC–F2805–00	23 – 11
	23 – 31
2HC–F2898–00	44 – 22
1XD–F311F–00	33 – 6
2HC–F3121–10	20 – 18
2HC–F3123–00	29 – 25
2HC–F3133–00	29 – 26
1XD–F3165–00	30 – 12
2HC–F3383–00	20 – 47
2HC–F3384–00	20 – 50
2HC–F338G–00	20 – 53
2HC–F3390–00	29 – 21
16B–F3394–01	33 – 11
2HC–F3400–01	30 – 1
1XD–F3447–00	30 – 13
1XD–F3489–00	30 – 9
2HC–F3501–00	34 – 21
2HC–F3502–00	35 – 21
2HC–F3505–10	29 – 1
2HC–F3506–10	29 – 4
2HC–F3507–10	29 – 7
2HC–F3508–10	29 – 8
2HC–F3583–00	29 – 34
2HC–F3818–00	30 – 44
2HC–F3833–00	30 – 16
2HC–F3838–00	30 – 41
2HC–F3840–00	30 – 17
1XD–F3844–00	30 – 3
2HC–F3855–00	30 – 35
2HC–F386B–00	29 – 35
2HC–F386G–01	28 – 10
2HC–F386H–00	28 – 11
2HC–F3870–00	30 – 29
2HC–F3874–01	30 – 47
1XD–F387F–00	30 – 6
1XD–F387G–00	30 – 4
2HC–F387G–00	30 – 53
1XD–F387J–00	30 – 7
1XD–F387K–00	30 – 5
2HC–F38G0–00	30 – 2
2HC–F38H0–00	30 – 10
2HC–F4110–00	31 – 1
2HC–F414H–00	31 – 24
1XD–F4163–00	56 – 8

PART NO.	REF. NO.
1XD–F4164–00	56 – 15
2HC–F4181–00	31 – 25
2MB–F4182–00	31 – 26
2HC–F463G–00	23 – 14
	23 – 34
2HC–F4658–50	34 – 4
	35 – 4
	37 – 4
	38 – 4
1XD–F467K–00	33 – 4
2HC–F4700–10	32 – 2
	32 – 12
2HC–F470J–00	33 – 1
1XD–F470L–00	33 – 9
2PG–F470R–00	33 – 7
2PG–F470R–10	33 – 8
2PG–F4739–00	32 – 5
	32 – 15
2HC–F473C–00	32 – 3
2HC–F473D–00	32 – 13
1XD–F4742–00	32 – 4
	32 – 14
2HC–F475X–00	32 – 9
2HC–F4790–10	32 – 1
	32 – 11
2HC–F4841–00	44 – 1
2HC–F4897–02	56 – 10
2HC–F5111–00	34 – 28
	35 – 28
	37 – 6
	38 – 6
2HC–F512A–00	34 – 7
	35 – 7
	37 – 24
	38 – 24
2HC–F514A–00	34 – 32
	35 – 32
2HC–F5168–50	34 – 1
	35 – 1
2HC–F5307–50	37 – 1
	38 – 1
2HC–F530F–02	37 – 25
2HC–F532F–02	38 – 25
2HC–F534C–00	37 – 39
2HC–F535C–00	38 – 39
1XD–F5690–00	41 – 44
1XD–F5711–01	40 – 1
2HC–F582T–00	36 – 1

PART NO.	REF. NO.
2HC–F582T–00	36 – 3
	39 – 1
	39 – 3
2HC–F5841–00	26 – 29
2HC–F5871–00	42 – 27
2HC–F5872–01	42 – 20
2HC–F5873–01	42 – 32
2HC–F5882–00	42 – 18
2HC–F5883–00	42 – 28
2HC–F5895–00	41 – 39
1XD–F5926–00	33 – 5
2HC–F6152–00	30 – 49
2HC–F6372–00	22 – 18
2HC–F6472–00	41 – 32
2HC–F7200–00	41 – 3
2HC–F7247–00	23 – 10
2HC–F7248–00	23 – 30
2HC–F7270–00	32 – 7
2HC–F7286–00	43 – 5
2HC–F7411–00	43 – 1
2HC–F7421–00	43 – 7
2HC–F7801–01	41 – 24
2HC–F7854–00	43 – 12
5B4–F8100–00	19 – 20
1XD–F811A–00	19 – 21
1P0–F8186–01	19 – 22
2HC–F8309–00	20 – 13
2HC–F831V–00	50 – 2
2HC–F832V–00	50 – 3
2MB–F8378–00	23 – 20
	23 – 40
2HC–F837L–00	22 – 1
2HC–F837M–00	22 – 7
2HC–F8385–00	45 – 3
2HC–F8395–00	45 – 7
2HC–F8418–00	45 – 18
2HC–F842M–00	44 – 24
1XD–F8446–00	56 – 1
2HC–F845N–00	45 – 1
2HC–F8483–00	21 – 29
2HC–F8484–00	21 – 30
2HC–F84A3–00	21 – 11
2HC–F84A4–00	21 – 15
2HC–F84A5–00	21 – 27
2HC–G2134–00	26 – 12
1XD–G2478–00	26 – 22
2HC–G4583–00	26 – 19
1XD–G5319–00	26 – 17

PART NO.	REF. NO.
2HC–G5567–00	26 – 23
1XD–G5577–00	26 – 24
2HC–G5677–00	26 – 14
2HC–G6101–03	26 – 1
2HC–G6126–00	26 – 13
2HC–G613A–00	26 – 4
2HC–G6152–00	26 – 3
2HC–G6156–00	26 – 5
2HC–G61A0–00	26 – 27
1CT–G6819–00	26 – 9
2HC–G7491–00	28 – 5
1XD–G7531–00	26 – 18
2HC–G7579–00	26 – 16
5UG–H2100–00	53 – 1
2HC–H2128–00	53 – 22
2HC–H212B–00	53 – 7
5UG–H2510–00	54 – 1
5UG–H251S–00	41 – 45
1HP–H254B–00	54 – 14
2HC–H2565–00	53 – 4
5UG–H2579–00	54 – 2
2HC–H3519–00	49 – 4
1XD–H3530–00	54 – 20
2HC–H3559–01	30 – 55
JW1–K6179–01	6 – 21
	43 – 3
	43 – 9
	51 – 5
2HC–K7171–00	23 – 3
2HC–K7172–00	23 – 23
5UG–K7526–00	46 – 6
	46 – 12
5UG–K7588–00	44 – 28
	46 – 22
2HC–K7711–00	20 – 1
5B4–K7761–00	56 – 12
5B4–K7762–00	56 – 13
2HC–K8187–00	20 – 32
2HC–K818K–00	20 – 35
2HC–K8193–01	44 – 12
2HC–K8194–01	44 – 17
2HC–K830A–00	46 – 16
2HC–K830B–00	46 – 24
2HC–K8314–00	46 – 20
2HC–K831A–00	46 – 1
2HC–K831E–00	46 – 7
2HC–K8366–00	46 – 21
2HC–K8392–00	46 – 13

PART NO.	REF. NO.
1XD–K8483–00	56 – 7
2HC–K8554–00	23 – 13
	23 – 33
2HC–K8557–00	23 – 1
2HC–K8558–00	23 – 21
F1K–U8221–00	44 – 27
2HC–W0042–50	41 – 13
1UY–W0048–50	36 – 12
	36 – 23
	39 – 12
	39 – 23
90101–10038	10 – 14
	27 – 47
90101–12050	29 – 12
90105–06027	1 – 10
90105–06096	16 – 23
90105–06123	11 – 15
90105–06142	18 – 21
90105–06187	15 – 38
90105–06831	6 – 14
	42 – 30
90105–06833	42 – 21
	42 – 33
	52 – 14
90105–068C3	34 – 5
	35 – 5
	37 – 5
	38 – 5
90105–07004	4 – 4
90105–08129	42 – 15
90105–08867	19 – 4
90105–10176	19 – 12
90105–10255	27 – 42
90105–10267	30 – 33
90105–10283	29 – 24
90105–10295	40 – 28
90105–10405	36 – 15
	36 – 26
	39 – 15
	39 – 26
90105–12032	2 – 11
90105–12051	28 – 3
90105–12066	27 – 44
	37 – 36
	38 – 36
90105–12082	26 – 44
90105–12094	13 – 42
90105–12095	25 – 25

PART NO.	REF. NO.
90105–12097	37 – 37
	38 – 37
90105–12098	25 – 6
90105–12099	2 – 22
90105–12100	25 – 26
90109–06031	7 – 30
90109–06185	11 – 12
90109–06202	15 – 35
	20 – 15
	20 – 42
	20 – 45
	45 – 4
	45 – 8
	45 – 13
	45 – 17
	45 – 19
90109–06255	30 – 36
90109–06293	1 – 35
90109–06295	4 – 11
90109–06307	44 – 14
	44 – 19
	46 – 26
90109–066F0	1 – 31
90109–06799	30 – 50
90109–068A5	44 – 2
90109–068A7	45 – 5
	45 – 9
90109–068A8	23 – 16
	23 – 36
90109–08076	36 – 2
	36 – 4
	39 – 2
	39 – 4
90109–08856	23 – 17
	23 – 37
90110–05034	47 – 5
90110–05067	52 – 10
90110–06102	23 – 42
	23 – 44
90110–06164	7 – 33
90110–06168	12 – 5
90110–06175	1 – 26
90110–06187	47 – 6
90110–06193	52 – 7
90110–06200	20 – 33
	20 – 36
	20 – 39
	44 – 13

PART NO.	REF. NO.
90110–06200	44 – 18
90110–06208	47 – 3
90110–06228	40 – 2
90110–06246	13 – 38
90110–06310	5 – 42
90110–06329	11 – 29
90110–06335	4 – 8
90111–06086	23 – 12
	23 – 32
90111–06096	37 – 40
	38 – 40
90111–06814	20 – 10
90111–10802	46 – 14
	46 – 15
	46 – 17
	46 – 25
90111–12002	33 – 13
90114–12005	34 – 29
	35 – 29
	37 – 7
	38 – 7
90116–08087	1 – 4
90119–06137	41 – 38
	42 – 40
90119–06152	53 – 5
	53 – 20
90119–06212	29 – 27
90119–06226	20 – 11
	20 – 16
	20 – 17
	20 – 19
	20 – 26
	20 – 27
	20 – 41
	20 – 44
	20 – 48
	20 – 51
	21 – 3
	21 – 8
	21 – 21
	21 – 25
	22 – 3
	22 – 6
	22 – 9
	22 – 12
	22 – 15
	30 – 54
	43 – 13

PART NO.	REF. NO.
90119–06226	44 – 15
	44 – 20
	44 – 26
	45 – 12
	45 – 16
90119–06242	15 – 31
	15 – 33
90119–06868	6 – 30
	53 – 19
90119–09004	11 – 6
90119–09011	11 – 7
90119–10004	1 – 16
90149–06298	10 – 12
90151–06024	2 – 28
90159–06021	15 – 30
90159–06027	17 – 7
90164–04800	20 – 3
90164–05014	49 – 2
90167–06800	46 – 23
90170–08358	18 – 18
90171–12001	30 – 38
90171–14005	29 – 17
	29 – 19
90176–12800	34 – 6
	35 – 6
	37 – 8
	38 – 8
90179–08015	53 – 3
90179–08410	10 – 3
90179–16004	16 – 13
	16 – 21
90179–22010	13 – 31
90179–24006	34 – 31
	35 – 31
	37 – 23
	38 – 23
90183–05008	50 – 8
	53 – 18
90183–06071	20 – 31
	30 – 46
90183–060A6	20 – 14
	20 – 24
	20 – 25
	20 – 29
	20 – 46
	20 – 49
	20 – 52
	21 – 5

PART NO.	REF. NO.
90183–060A6	21 – 10
	21 – 12
	21 – 16
	21 – 22
	21 – 26
	22 – 17
	43 – 4
	43 – 10
	43 – 14
	44 – 25
	45 – 6
	45 – 11
	45 – 15
	45 – 20
	50 – 7
	53 – 17
90185–10011	27 – 48
	46 – 3
	46 – 5
	46 – 9
	46 – 11
	46 – 19
90185–10012	29 – 23
	29 – 33
90185–12002	19 – 8
	26 – 41
	26 – 45
	27 – 45
90185–12007	25 – 8
	25 – 27
	25 – 28
	28 – 4
	28 – 9
	29 – 14
	37 – 38
	38 – 38
90185–12008	30 – 42
90201–05033	51 – 3
90201–06102	24 – 10
90201–065G8	31 – 22
90201–083P5	30 – 19
90201–10034	10 – 15
	27 – 49
90201–10035	27 – 43
	29 – 32
90201–10118	41 – 43
	42 – 26
	42 – 39

PART NO.	REF. NO.
90201–10591	2 – 36
90201–11801	33 – 12
90201–12045	25 – 7
	25 – 29
	25 – 30
	28 – 8
	29 – 13
	30 – 39
90201–121H0	2 – 12
	13 – 41
90201–12575	17 – 14
	18 – 8
90201–12790	5 – 27
90201–127E1	18 – 5
	18 – 6
90201–14021	27 – 15
90201–15018	41 – 9
	41 – 25
90201–165H4	16 – 12
	16 – 20
90201–17257	14 – 38
90201–20266	27 – 38
90201–22013	13 – 27
90201–25023	34 – 30
	35 – 30
	37 – 22
	38 – 22
90201–25290	14 – 27
90201–27014	16 – 6
90201–30013	12 – 6
90201–51013	14 – 12
90208–22003	13 – 30
90209–24011	6 – 23
90209–25011	14 – 4
90209–28008	14 – 20
90214–25003	14 – 10
90214–25004	14 – 9
90214–28002	14 – 17
90214–29002	14 – 16
90215–10003	2 – 35
90240–08005	41 – 22
	42 – 16
90249–05801	23 – 8
	23 – 28
90267–24143	20 – 6
90267–489U9	32 – 10
90269–05055	18 – 16
90269–07803	20 – 12

POWER PARTS

PART NO.	REF. NO.
90269–07803	20 – 20
	20 – 28
	20 – 34
	20 – 37
	21 – 4
	21 – 9
	21 – 13
	21 – 14
	21 – 17
	21 – 18
	21 – 20
	21 – 24
	21 – 28
	22 – 4
	22 – 5
	22 – 10
	22 – 11
	22 – 13
	22 – 16
	22 – 19
	22 – 22
	30 – 56
	43 – 6
	43 – 11
	44 – 3
	44 – 16
	44 – 21
	53 – 6
90280–03045	2 – 10
90340–10001	27 – 18
90340–10003	15 – 3
90340–12006	15 – 21
90340–14016	11 – 22
90340–14029	27 – 32
90340–27129	1 – 7
	11 – 2
90340–36004	11 – 20
90381–15001	18 – 12
90381–15088	30 – 30
90381–17067	37 – 31
	38 – 31
90381–18003	25 – 3
	29 – 9
90387–06113	6 – 20
90387–061V1	31 – 21
90387–07021	31 – 18
90387–07051	8 – 38
90387–08107	18 – 11

PART NO.	REF. NO.
90387–10111	30 – 31
90387–10843	41 – 4
90387–12060	37 – 33
	38 – 33
90387–12061	37 – 34
	38 – 34
90387–12062	25 – 4
90387–12063	29 – 10
90387–25023	14 – 7
90387–28003	14 – 2
90387–28004	14 – 18
90387–30008	34 – 25
	35 – 25
90387–30013	37 – 29
	38 – 29
90387–31003	14 – 23
90401–10015	41 – 42
	42 – 25
	42 – 38
90401–20008	7 – 23
90430–06014	5 – 37
	6 – 9
	15 – 6
	15 – 25
90430–06192	7 – 31
90430–08119	1 – 3
90430–08204	24 – 8
90430–10003	27 – 20
90430–10148	15 – 4
	52 – 12
90430–12213	15 – 22
90445–07047	27 – 34
90445–074F6	26 – 38
90445–08040	15 – 13
90445–08041	15 – 14
90445–083J7	6 – 27
90445–084J3	6 – 28
90445–09830	31 – 11
90445–09831	31 – 13
90450–17001	5 – 31
	5 – 39
90450–19001	5 – 35
	5 – 44
90450–22M14	5 – 38
	5 – 45
90450–35001	5 – 33
	5 – 40
	6 – 11

PART NO.	REF. NO.
90450–56009	8 – 37
90450–60004	1 – 12
	1 – 14
90461–12800	6 – 13
90462–08225	11 – 26
90464–12045	6 – 5
90464–12830	31 – 15
	41 – 30
	54 – 4
90464–13077	47 – 8
90464–14004	31 – 7
90464–14800	54 – 5
90464–15007	31 – 8
90464–15065	54 – 3
90464–16012	41 – 33
	42 – 34
90464–18011	42 – 24
90464–19815	42 – 35
90464–20010	31 – 10
90464–20804	54 – 7
90464–23041	8 – 27
90464–25826	54 – 6
90464–30040	54 – 8
90464–37257	6 – 29
90464–40825	54 – 11
90464–48800	41 – 31
	54 – 12
90464–51800	54 – 13
90467–07029	26 – 39
	27 – 35
90467–07093	5 – 13
90467–08003	6 – 31
90467–08075	15 – 15
90467–09006	31 – 12
	31 – 14
90467–100A1	1 – 30
90467–11044	41 – 40
90467–110A3	8 – 22
	8 – 32
90467–13M13	8 – 31
90467–14057	41 – 41
90467–140A4	8 – 29
90467–150A2	9 – 27
90467–17089	10 – 17
	10 – 20
90467–180A1	8 – 30
90467–20086	10 – 21
90467–22097	7 – 8

PART NO.	REF. NO.
90467–22097	7 – 11
	7 – 13
	7 – 16
	8 – 28
90467–220A1	8 – 21
90467–26189	6 – 10
90467–310A0	6 – 12
90480–01400	31 – 20
90480–01558	53 – 21
90480–14052	49 – 3
90480–15235	6 – 19
90480–18004	6 – 22
90480–18016	31 – 17
90480–20543	31 – 9
90501–08614	50 – 5
90501–20361	26 – 30
90501–235L9	27 – 39
90506–09009	30 – 51
90506–20192	41 – 7
	41 – 11
	41 – 27
90508–32021	18 – 3
90520–05020	53 – 14
90520–05021	53 – 15
90520–05022	53 – 16
90520–20006	21 – 7
90520–20007	21 – 2
91312–04006	9 – 32
91312–06014	11 – 19
91312–06016	7 – 19
	24 – 6
91312–06025	5 – 18
	7 – 28
	11 – 28
91312–06040	5 – 17
91312–06065	1 – 34
91312–08020	2 – 38
	2 – 44
91312–08025	30 – 18
91317–06035	7 – 29
91401–20020	41 – 23
91402–20020	30 – 40
	42 – 17
91402–30025	29 – 18
	29 – 20
91808–16023	1 – 8
	1 – 9
91808–22019	7 – 6

PART NO.	REF. NO.
92012–06012	30 – 48
	34 – 33
	35 – 33
	37 – 42
	38 – 42
92012–08012	23 – 19
	23 – 39
92012–08030	30 – 27
92012–10060	46 – 4
	46 – 10
92902–04100	41 – 17
92902–04600	41 – 18
92902–05600	54 – 19
	54 – 23
92902–12200	19 – 9
	26 – 42
	26 – 46
	27 – 46
	30 – 43
93102–10207	5 – 6
93102–12106	17 – 16
93102–12224	18 – 7
93102–34095	16 – 18
93102–35039	13 – 9
93105–45010	16 – 9
93105–46001	27 – 13
93105–57007	2 – 16
93106–38800	34 – 24
	35 – 24
	37 – 28
	38 – 28
93106–42800	34 – 23
	35 – 23
93106–42801	37 – 27
	38 – 27
93109–08061	13 – 36
93210–06632	13 – 33
93210–14003	11 – 18
93210–14369	11 – 23
93210–14579	7 – 4
93210–15620	41 – 15
93210–16629	7 – 18
93210–17008	52 – 9
93210–18322	7 – 3
93210–19123	1 – 28
93210–192A6	2 – 43
93210–207A0	15 – 29
93210–21190	15 – 8

PART NO.	REF. NO.
93210–22006	24 – 3
93210–235A1	5 – 41
93210–24001	24 – 5
93210–24709	11 – 4
93210–357A3	11 – 21
93210–49046	5 – 25
93210–84724	2 – 18
93305–00603	37 – 26
	38 – 26
93306–00006	5 – 5
	5 – 20
93306–00518	16 – 15
93306–00613	27 – 8
93306–01005	2 – 20
93306–20483	13 – 7
93306–20595	14 – 32
93306–20607	16 – 8
93306–206Y2	34 – 22
	35 – 22
93306–30323	2 – 25
93306–30525	13 – 8
93306–30574	26 – 20
93306–30585	14 – 33
93306–37215	14 – 14
93306–37218	16 – 10
93306–37817	14 – 13
93306–91102	2 – 17
93306–97201	30 – 24
93310–32590	14 – 28
93310–33560	13 – 28
93310–42239	2 – 29
93399–99948	2 – 40
	13 – 43
	13 – 46
	16 – 26
	16 – 29
	27 – 27
	27 – 30
93410–17037	14 – 35
93410–25017	14 – 30
93410–26067	26 – 34
93410–42096	29 – 3
	29 – 6
	34 – 27
	35 – 27
93420–26077	5 – 21
93430–12008	41 – 10
	41 – 26

POWER PARTS

PART NO.	REF. NO.
93440–20088	2 – 41
	13 – 44
	13 – 47
	16 – 27
	16 – 30
	27 – 28
	27 – 31
93440–28184	14 – 5
93440–31187	14 – 21
93450–19095	2 – 9
93450–22119	34 – 20
	35 – 20
93450–32152	2 – 32
93511–32017	13 – 34
93604–16092	5 – 10
93700–06004	25 – 9
	29 – 15
	37 – 30
	38 – 30
93700–06009	29 – 16
93900–00813	34 – 3
	35 – 3
	37 – 3
	38 – 3
94109–14809	34 – 2
	35 – 2
94111–14802	37 – 2
	38 – 2
94580–25064	7 – 20
94591–57140	4 – 5
94702–00409	1 – 15
95022–06008	6 – 8
	52 – 16
95022–06010	15 – 5
95022–06012	5 – 36
	10 – 7
95022–06014	53 – 23
95022–06016	31 – 28
95022–06020	5 – 28
95022–06030	15 – 24
	16 – 22
95022–06045	15 – 17
95022–06060	15 – 18
95022–08012	1 – 2
95022–08035	10 – 10
95022–10030	30 – 14
95302–06800	31 – 5
95302–08700	18 – 19

PART NO.	REF. NO.
95602–06200	40 – 3
95602–08200	18 – 14
95602–10200	19 – 13
	30 – 34
	41 – 6
95612–06100	33 – 3
95702–06300	30 – 37
95802–06030	31 – 19
	31 – 23
95802–08012	24 – 7
95812–06010	42 – 23
	42 – 37
95812–06012	7 – 22
	7 – 37
	17 – 13
	41 – 46
	44 – 9
	44 – 11
95812–06014	27 – 21
	53 – 27
95812–06016	7 – 35
	19 – 19
	24 – 9
	49 – 5
	52 – 28
95812–06020	2 – 21
	8 – 39
	23 – 5
	23 – 25
95812–06025	13 – 24
	52 – 4
95812–06040	7 – 5
95812–06055	11 – 13
95812–06080	11 – 14
95812–08012	32 – 8
	32 – 17
95812–08014	29 – 36
95812–08016	19 – 3
	41 – 2
	44 – 23
	50 – 10
95812–08020	19 – 10
95812–08025	19 – 15
	30 – 28
95812–08030	48 – 9
95812–08040	27 – 22
95812–08050	18 – 13
	27 – 25

PART NO.	REF. NO.
95812–08050	41 – 21
95812–08055	11 – 10
	19 – 11
95812–08070	11 – 11
95812–10016	19 – 6
	19 – 17
	26 – 47
	45 – 2
95812–10020	28 – 12
95812–10045	46 – 2
	46 – 8
	46 – 18
95812–10090	41 – 5
95812–12020	33 – 10
95812–12070	19 – 7
95812–12130	26 – 40
95822–08016	8 – 34
	15 – 11
95880–06012	15 – 39
97002–05016	54 – 18
97002–05020	54 – 22
97012–10025	2 – 34
97022–06040	33 – 2
97080–08020	53 – 2
97707–50016	51 – 2
97707–50520	8 – 24
98502–03530	50 – 4
98502–04012	41 – 16
98502–06016	5 – 9
98702–06030	15 – 10
98902–05016	50 – 9
99002–04600	23 – 9
	23 – 29
99002–08600	5 – 11
99002–10600	17 – 15
	18 – 4
	18 – 9
99009–19400	27 – 37
99009–22400	26 – 32
	30 – 26
99009–35500	25 – 12
	25 – 15
	25 – 19
	25 – 22
99009–40500	30 – 25
99009–47500	16 – 16
99009–55400	2 – 19
99009–72500	37 – 32

PART NO.	REF. NO.
99009–72500	38 – 32
99530–08012	5 – 16
	7 – 26
	11 – 25
	13 – 39
99530–08016	15 – 23
99530–10014	11 – 8
99530–10114	11 – 9
	15 – 19

POWER PARTS By ayaad